Alle Rechte vorbehalten/ *All rights reserved*

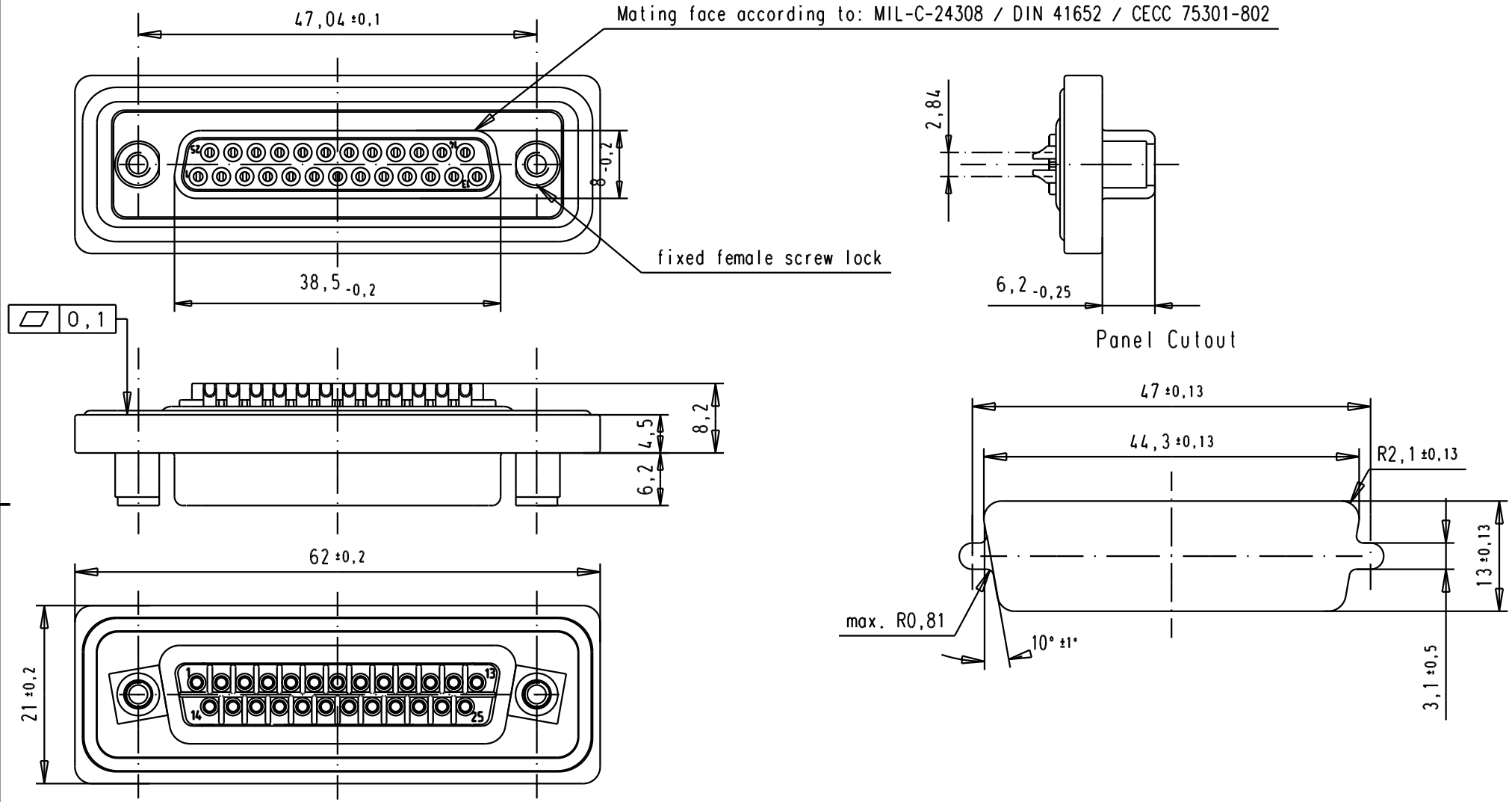

09 67 825 8715	M3
09 67 825 6715	UNC 4-40
Part number	screw lock

32156	02/09/04	TR
Mod.	Dat.	Name

	Dat.	Name
Detail.	02/09/04	TR
Insp.		
Stand.		

All Dim. in mm
Orig. Size DIN A 4

HARTING EURL
F-95972 Paris

D-sub female 25 poles straight with solder buckets, front metal plate and screw locks

Maßstab/ *Scale* 1,5:1

TB 09 67 825 X715

Sub.

Blatt/ *Page* 1/1

Downloaded from Arrow.com.