Data Sheet | Item Number: 831-3622

THT male header; 1.0 x 1.2 mm solder pin; angled; 100% protected against mismating; Pin spacing 7.62 mm; 2-pole; light gray

https://www.wago.com/831-3622

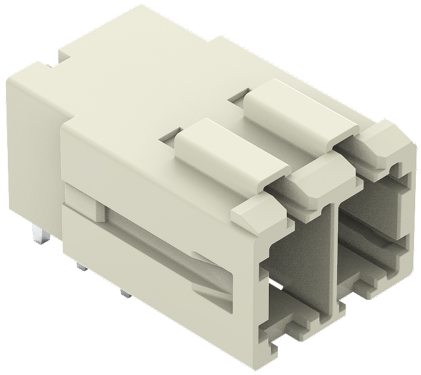

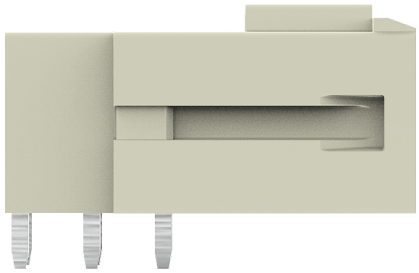

Color: light gray

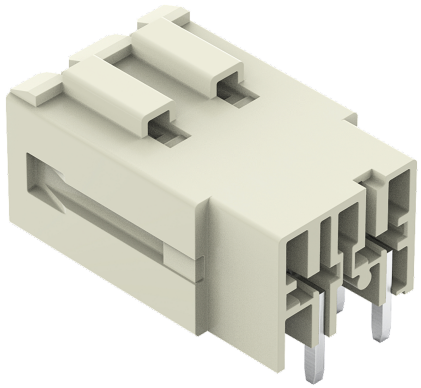

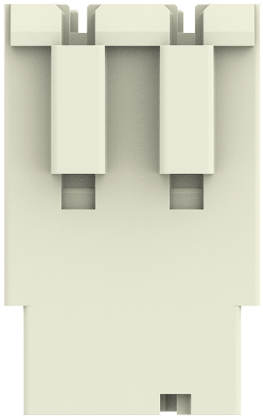

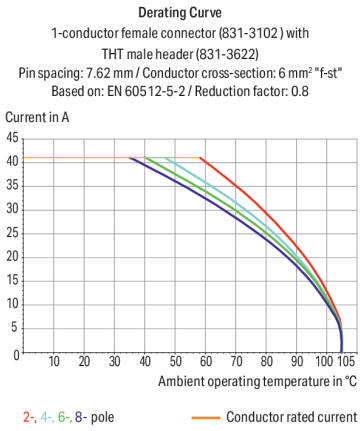

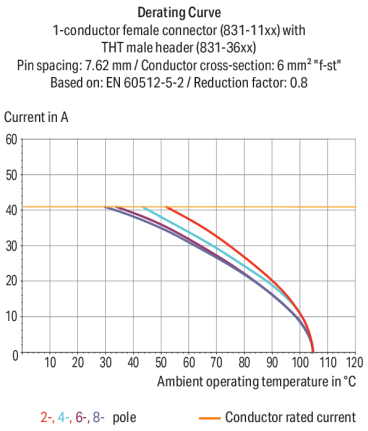

Downloaded from Arrow.com.

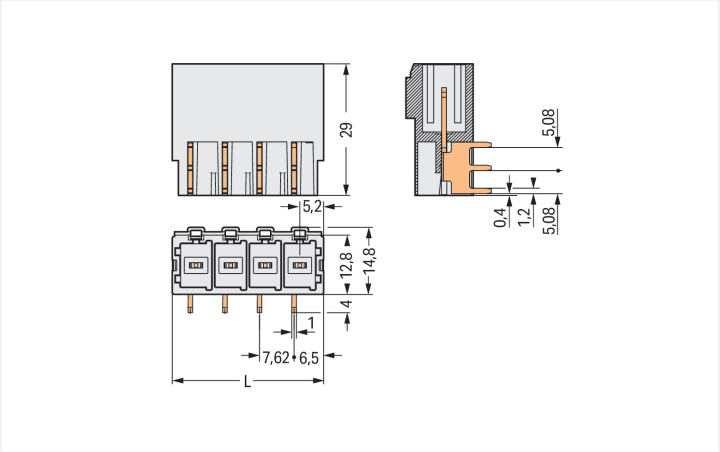

Dimensions in mm
L = (pole no. – 1) x pin spacing + 10.5 mm

Male connector, 831 Series, light gray

Enjoy convenient electrical installations with this male connector (item number 831-3622). The item's dimensions are (18.12 x 18.8 x 29) mm (width x height x depth).

The contact surface is coated with tin. THT is used to assemble the PCB connector.

- Pin spacing: 7.62 mm
- 2 connection points
- Safe and fast installation
- Compact sizes
- Reliable soldering thanks to THT

Notes

Safety Information	The *MCS – MULTI CONNECTION SYSTEM* includes connectors without breaking capacity in accordance with DIN EN 61984. When used as intended, these connectors must not be connected/disconnected when live or under load.When used as intended, these connectors must not be connected/disconnected when live or under load. The circuit design should ensure header pins, which can be touched, are not live when unmated.
Variants:	Other pole numbers Protection against PCB mounting errors Other versions (or variants) can be requested from WAGO Sales or configured at https://configurator.wago.com/.

Electrical data

Ratings per	IEC/EN 60664-1		
Overvoltage category	III	III	II
Pollution degree	3	2	2
Nominal voltage	500 V	630 V	1000 V
Rated impulse withstand voltage	6 kV	6 kV	6 kV
Rated current	41 A	41 A	41 A

Approvals per	CSA		
Use group	B	C	D
Rated voltage	-	300 V	600 V
Rated current	-	41 A	5 A

Approvals per	UL 1059		
Use group	B	C	D
Rated voltage	-	300 V	600 V
Rated current	-	42 A	5 A

Downloaded from Arrow.com.

Connection Data

Total number of potentials	2
Number of connection types	1
Number of levels	1

Connection 1

Pole number	2

Physical data

Pin spacing	7.62 mm / 0.3 inches
Width	18.12 mm / 0.713 inches
Height	18.8 mm / 0.74 inches
Height from the surface	14.8 mm / 0.583 inches
Depth	29 mm / 1.142 inches
Solder pin length	4 mm
Solder pin dimensions	1 x 1.2 mm
Drilled hole diameter	1.7 $^{(+0.1)}$ mm

Mechanical data

Variable coding	Yes
Anti-rotation protection	Yes

Plug-in connection

Contact type (pluggable connector)	Male connector/plug
Connector (connection type)	for PCB
Mismating protection	Yes
Mating direction to the PCB	0 °

PCB contact

PCB contact	THT
Solder pin arrangement	over the entire male connector (in-line)
Number of solder pins per potential	3

Material data

Note (material data)	Information on material specifications can be found here
Color	light gray
Material group	I
Insulation material (main housing)	Polyamide (PA66)
Flammability class per UL94	V0
Contact material	Electrolytic copper (E_{Cu})
Contact Plating	Tin
Fire load	0.093 MJ
Weight	5.7 g

Environmental requirements

Limit temperature range	-60 … +105 °C
Processing temperature	-35 … +60 °C

Environmental Testing

Test specification: Railway applications – Rolling stock – Electronic equipment	DIN EN 50155 (VDE 0115-200):2022-06

Downloaded from Arrow.com.

Environmental Testing

Test procedure: Railway applications – Rolling stock equipment – Vibration and shock tests	DIN EN 61373 (VDE 0115-0106):2011-04
Spectrum/Mounting location	Service life test, Category 1, Class A/B
Functional test with noise-like oscillations	Test passed according to Section 8 of the standard
Frequency	f_1 = 5 Hz to f_2 = 150 Hz
Acceleration	0.101g (highest test level used for all axes)
Test duration per axis	10 min.
Test directions	X, Y and Z axes
Monitoring of contact faults and interruptions	Passed
Voltage drop measurement before and after each axis	Passed
Simulated service life test through increased levels of noise-like oscillations	Test passed according to Section 9 of the standard
Frequency	f_1 = 5 Hz to f_2 = 150 Hz
Acceleration	0.572g (highest test level used for all axes)
Test duration per axis	5 h
Test directions	X, Y and Z axes
Extended testing: Monitoring of contact faults and interruptions	Passed
Extended testing: Voltage drop measurement before and after each axis	Passed
Shock test	Test passed according to Section 10 of the standard
Shock pulse form	Half sine
Acceleration	5g (highest test level used for all axes)
Shock duration	30 ms
Number of shocks (per axis)	3 pos. und 3 neg.
Test directions	X, Y and Z axes
Extended testing: Monitoring of contact faults and interruptions	Passed
Extended testing: Voltage drop measurement before and after each axis	Passed
Vibration and shock stress for rolling stock equipment	Passed

Commercial data

Product Group	3 (Multi Conn. System)
PU (SPU)	48 pcs
Packaging type	Box
Country of origin	PL
GTIN	4045454002176
Customs tariff number	85366930000

Product Classification

UNSPSC	39121409
eCl@ss 10.0	27-44-04-02
eCl@ss 9.0	27-44-04-02
ETIM 9.0	EC002637
ETIM 10.0	EC002637
ECCN	NO US CLASSIFICATION

Downloaded from Arrow.com.

Environmental Product Compliance

RoHS Compliance Status	Compliant,No Exemption

Approvals / Certificates

General approvals

Approval	Standard	Certificate Name
CB DEKRA Certification B.V.	IEC 61984	NL-124478
CSA DEKRA Certification B.V.	C22.2	1466354
KEMA/KEUR DEKRA Certification B.V.	EN 61984	71-129589 REV.1
UR Underwriters Laboratories Inc.	UL 1059	UL-US-2426356-0

Declarations of conformity and manufacturer's declarations

Approval	Standard	Certificate Name
Railway WAGO GmbH & Co. KG	-	Railway Ready

Approvals for marine applications

Approval	Standard	Certificate Name
LR Lloyds Register	IEC 61984	96/20035 (E5)

Downloads

Environmental Product Compliance

Compliance Search

Environmental Product Compliance 831-3622

Documentation

Additional Information

Technical Section	03.04.2019	pdf 2027.26 KB

Downloaded from Arrow.com.

CAD/CAE-Data

CAD data

2D/3D Models 831-3622

CAE data

EPLAN Data Portal
831-3622

ZUKEN Portal 831-3622

PCB Design

Symbol and Footprint via
SamacSys 831-3622

Symbol and Footprint via
Ultra Librarian 831-3622

1 Compatible Products

1.1 System counterpart

1.1.1 Female connector/socket



Item No.: 831-1102
1-conductor female connector; lever; Push-in CAGE CLAMP®; 10 mm²; Pin spacing 7.62 mm; 2-pole; 100% protected against mis-mating; 10,00 mm²; light gray



Item No.: 831-1102/000-004
1-conductor female connector; lever; Push-in CAGE CLAMP®; 10 mm²; Pin spacing 7.62 mm; 2-pole; 100% protected against mis-mating; black



Item No.: 831-1102/322-000
1-conductor female connector; lever; Push-in CAGE CLAMP®; 10 mm²; Pin spacing 7.62 mm; 2-pole; 100% protected against mis-mating; Centered locking levers; 10,00 mm²; light gray



Item No.: 831-1102/322-004
1-conductor female connector; lever; Push-in CAGE CLAMP®; 10 mm²; Pin spacing 7.62 mm; 2-pole; 100% protected against mis-mating; Centered locking levers; black



Item No.: 831-1102/133-000
1-conductor female connector; lever; Push-in CAGE CLAMP®; 10 mm²; Pin spacing 7.62 mm; 2-pole; 100% protected against mis-mating; Gripping plate; 10,00 mm²; light gray



Item No.: 831-1102/037-000
1-conductor female connector; lever; Push-in CAGE CLAMP®; 10 mm²; Pin spacing 7.62 mm; 2-pole; 100% protected against mis-mating; Lateral locking levers; 10,00 mm²; light gray



Item No.: 831-1102/038-000
1-conductor female connector; lever; Push-in CAGE CLAMP®; 10 mm²; Pin spacing 7.62 mm; 2-pole; 100% protected against mis-mating; Lateral locking levers; 10,00 mm²; light gray



Item No.: 831-3102
1-conductor female connector; Push-in CAGE CLAMP®; 10 mm²; Pin spacing 7.62 mm; 2-pole; 100% protected against mis-mating; 10,00 mm²; light gray



Item No.: 831-3102/000-9037
1-conductor female connector; Push-in CAGE CLAMP®; 10 mm²; Pin spacing 7.62 mm; 2-pole; 100% protected against mis-mating; direct marking; 10,00 mm²; light gray



Item No.: 831-3102/133-000
1-conductor female connector; Push-in CAGE CLAMP®; 10 mm²; Pin spacing 7.62 mm; 2-pole; 100% protected against mis-mating; Gripping plate; 10,00 mm²; light gray



Item No.: 831-3102/037-000
1-conductor female connector; Push-in CAGE CLAMP®; 10 mm²; Pin spacing 7.62 mm; 2-pole; 100% protected against mis-mating; Lateral locking levers; 10,00 mm²; light gray



Item No.: 831-3102/037-9037
1-conductor female connector; Push-in CAGE CLAMP®; 10 mm²; Pin spacing 7.62 mm; 2-pole; 100% protected against mis-mating; Lateral locking levers; direct marking; 10,00 mm²; light gray



Item No.: 831-3522
THT female header; angled; Pin spacing 7.62 mm; 2-pole; 100% protected against mis-mating; 1.0 x 1.2 mm solder pin; light gray



Item No.: 831-3502
THT female header; straight; Pin spacing 7.62 mm; 2-pole; 100% protected against mismating; 1.0 x 1.2 mm solder pin; light gray

Downloaded from Arrow.com.

1.2 Optional Accessories

1.2.1 Coding

1.2.1.1 Coding



Item No.: 831-500
Coding pin carrier with six coding pins; orange

Installation Notes

Coding

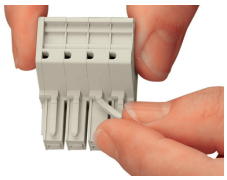

Break or cut off coding pin from female connector.

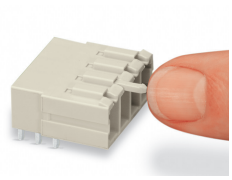

Insert coding pin into male header (break first) until it engages.

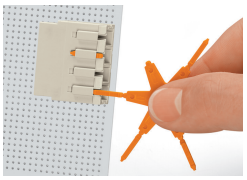

Coding a THT male header by inserting a coding pin.

Downloaded from Arrow.com.