Downloaded from Arrow.com.

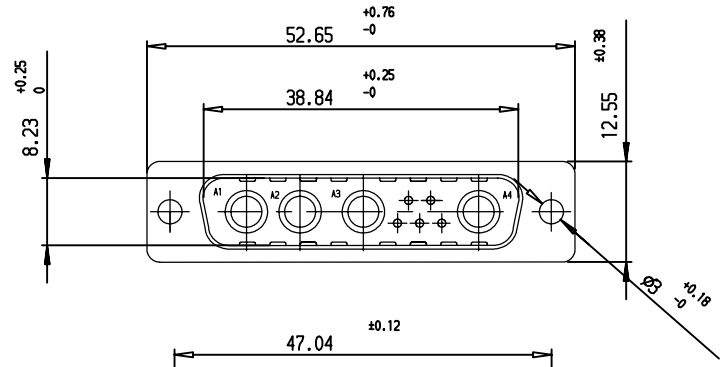

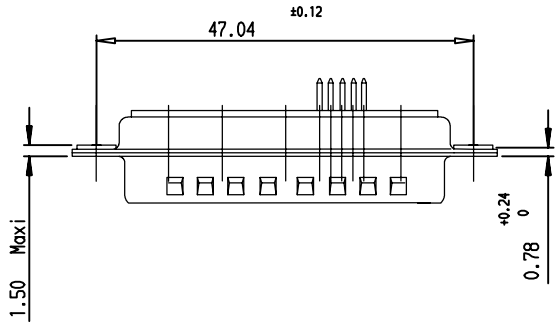

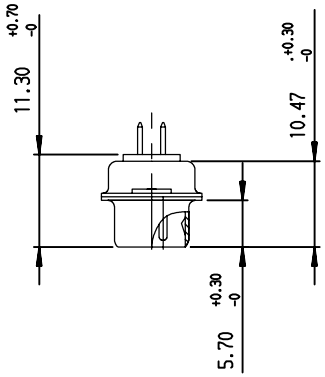

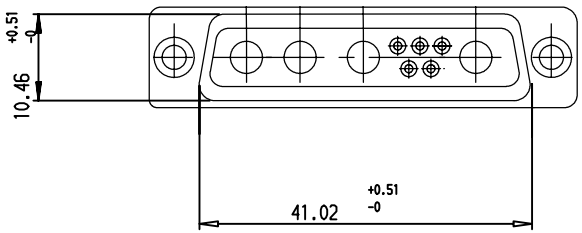

LAYOUT DIMENSIONS (after plating)
CONNECTOR SIDE VIEW

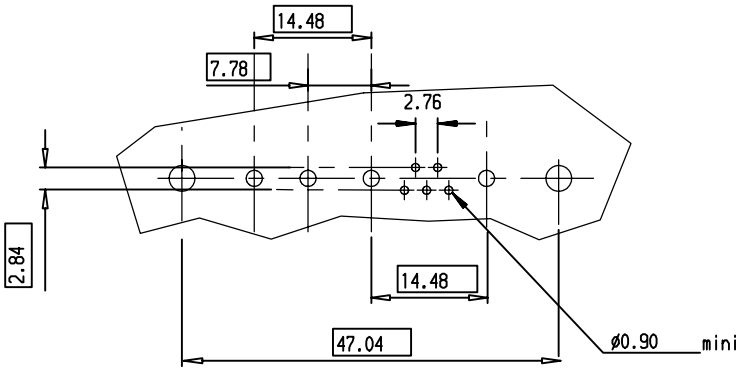

DB9W4P300A00LF
PART NUMBER

GENERAL CHARACTERISTICS AND ROHS INFORMATIONS:
SEE DRAWING C01-8639-0000

European Views

rev	ecn no	dr	date
A	LS05-0106	MPE	2005/12/01
B	LS06-0095	LGO	2006/07/28
-	-	-	-
-	-	-	-
-	-	-	-
-	-	-	-
-	-	-	-

Dr	PESSON	2005/12/01
Eng	PESSON	2005/12/01
Chr	LEGARE	2005/12/01
Appr	LEGARE	2005/12/01

www.fciconnect.com

surface ISO 1302 | tolerance std ISO 406 ISO 1101

TOLERANCES UNLESS OTHERWISE SPECIFIED

ANGULAR		LINEAR		
0.XX°	±2°	0.X	±0.1	
		0.XX	±0.1	
		0.XXX	±0.1	

Product family D-SUB

projection | mm

size A3 | Scale 1.5

ECN LS06-0095

Spec ref -

title PIN CONNECTOR WITH STRAIGHT CONTACTS

dwg no C01-8639-2258

Rev. B

catalog no -

CUSTOMER

sheet 1 of 1

REV F - 2006-04-17

Copyright FCI.

PDM: Rev:B STATUS: Released Printed: Oct 01, 2010