Innovative Service Around the Globe YAGEO

DATA SHEET

SURFACE-MOUNT CERAMIC MULTILAYER CAPACITORS

General purpose

Class 1, NP0

16 V TO 250 V

0.22 pF to 100 nF

RoHS compliant & Halogen Free

YAGEO

Product Specification – November 25, 2025 V.22



Downloaded from Arrow.com.

SCOPE

This specification describes NP0 series chip capacitors with lead-free terminations.

APPLICATIONS

- Consumer electronics for example
  - Tuners
  - Television receivers
  - All types of cameras
- Telecommunications
- Data processing

FEATURES

- Supplied in tape on reel
- Nickel-barrier end termination
- RoHS compliant
- Halogen Free compliant
- MSL class: level 1

ORDERING INFORMATION - GLOBAL PART NUMBER, PHYCOMP CTC & 12NC

All part numbers are identified by the series, size, tolerance, TC material, packing style, voltage, process code, termination and capacitance value.

YAGEO BRAND ordering code

GLOBAL PART NUMBER (PREFERRED)

CC	XXXX	X	X	NPO	X	BN	XXX
	(1)	(2)	(3)		(4)		(5)

(1) SIZE – INCH BASED (METRIC)

0201 (0603)
0402 (1005)
0603 (1608)
0805 (2012)
1206 (3216)
1210 (3225)
1812 (4532)

(2) TOLERANCE

B = ±0.1 pF
C = ±0.25 pF
D = ±0.5 pF
F = ±1%
G = ±2%
J = ±5%
K = ±10%

(3) PACKING STYLE

R = Paper/PE taping reel; Reel 7 inch
K = Blister taping reel; Reel 7 inch
P = Paper/PE taping reel; Reel 13 inch
F = Blister taping reel; Reel 13 inch
C = Bulk case

(4) RATED VOLTAGE

7 = 16 V
8 = 25 V
9 = 50 V
0 = 100 V
A = 200 V
Y = 250 V

(5) CAPACITANCE VALUE

2 significant digits+number of zeros
The 3rd digit signifies the multiplying factor, and letter R is decimal point
Example: 121 = 12×10^1 = 120 pF

Downloaded from Arrow.com.

CONSTRUCTION

The capacitor consists of a rectangular block of ceramic dielectric in which a number of interleaved metal electrodes are contained. This structure gives rise to a high capacitance per unit volume.

The inner electrodes are connected to the two end terminations and finally covered with a layer of plated tin (NiSn). The terminations are lead-free. A cross section of the structure is shown in Fig.1.

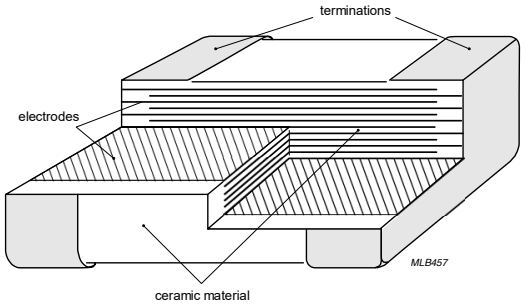

Fig. 1 Surface mounted multilayer ceramic capacitor construction

DIMENSION

Table 1 For outlines see fig. 2

TYPE	L_1 (mm)	W (mm)	T (MM)	L_2 / L_3 (mm) min.	L_2 / L_3 (mm) max.	L_4 (mm) min.
0201	0.6 ±0.03	0.3±0.03	0.3±0.03	0.10	0.20	0.20
0402	1.0 ±0.05	0.5 ±0.05	0.5 ±0.05	0.15	0.35	0.30
0603	1.6 ±0.10	0.8 ±0.10	0.8 ±0.10	0.20	0.60	0.40
0805	2.0 ±0.10	1.25 ±0.10	0.6 ±0.10	0.25	0.75	0.70
	2.0 ±0.20	1.25 ±0.20	0.85 ±0.10			
			1.25 ±0.20			
1206	3.2 ±0.15	1.6 ±0.15	0.6 ±0.10	0.25	0.75	1.40
			0.85 ±0.10			
	3.2 ±0.30	1.6 ±0.20	0.85 ± 0.10[1]			
			1.25 ±0.20			
			1.6 ±0.20			
	3.2 ±0.30	1.6 ±0.30	1.6 ±0.30	0.3	0.9	1.4
1210	3.2 ±0.20	2.5 ±0.20	0.85 ±0.10	0.25	0.75	1.40
	3.2 ±0.40	2.5 ±0.30	1.25 ±0.20			
			1.6 ±0.20			
			2.0 ±0.20			
1808	4.5 ±0.40	2.0 ±0.30	1.25 ±0.20	0.25	0.75	2.20
1812	4.5 ±0.40	3.2 ±0.30	0.85 ±0.10	0.25	0.75	2.20
			1.25 ±0.20			
			1.60 ±0.20			
2020	5.7 ±0.40	5.0 ±0.30	2.0 ±0.20	0.25	0.75	3.40

NOTE

1. Dimension for size 1206, 12nF to 33nF, 25V to 100V.

OUTLINES

For dimension see Table 1

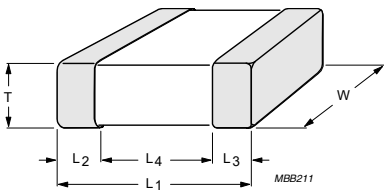

Fig. 2 Surface mounted multilayer ceramic c

Downloaded from Arrow.com.

CAPACITANCE RANGE & THICKNESS FOR NP0

Table 2 Sizes from 0201 to 0402

CAP.	0201			0402			
	25 V	50 V	100 V	16 V	25 V	50 V	100 V
0.22 pF	0.3±0.03	0.3±0.03					
0.47 pF	0.3±0.03	0.3±0.03	0.3±0.03	0.5±0.05	0.5±0.05	0.5±0.05	0.5±0.05
0.82 pF	0.3±0.03	0.3±0.03	0.3±0.03	0.5±0.05	0.5±0.05	0.5±0.05	0.5±0.05
1.0 pF	0.3±0.03	0.3±0.03	0.3±0.03	0.5±0.05	0.5±0.05	0.5±0.05	0.5±0.05
1.2 pF	0.3±0.03	0.3±0.03	0.3±0.03	0.5±0.05	0.5±0.05	0.5±0.05	0.5±0.05
1.5 pF	0.3±0.03	0.3±0.03	0.3±0.03	0.5±0.05	0.5±0.05	0.5±0.05	0.5±0.05
1.8 pF	0.3±0.03	0.3±0.03	0.3±0.03	0.5±0.05	0.5±0.05	0.5±0.05	0.5±0.05
2.2 pF	0.3±0.03	0.3±0.03	0.3±0.03	0.5±0.05	0.5±0.05	0.5±0.05	0.5±0.05
2.7 pF	0.3±0.03	0.3±0.03	0.3±0.03	0.5±0.05	0.5±0.05	0.5±0.05	0.5±0.05
3.3 pF	0.3±0.03	0.3±0.03	0.3±0.03	0.5±0.05	0.5±0.05	0.5±0.05	0.5±0.05
3.9 pF	0.3±0.03	0.3±0.03	0.3±0.03	0.5±0.05	0.5±0.05	0.5±0.05	0.5±0.05
4.7 pF	0.3±0.03	0.3±0.03	0.3±0.03	0.5±0.05	0.5±0.05	0.5±0.05	0.5±0.05
5.6 pF	0.3±0.03	0.3±0.03	0.3±0.03	0.5±0.05	0.5±0.05	0.5±0.05	0.5±0.05
6.8 pF	0.3±0.03	0.3±0.03	0.3±0.03	0.5±0.05	0.5±0.05	0.5±0.05	0.5±0.05
8.2 pF	0.3±0.03	0.3±0.03	0.3±0.03	0.5±0.05	0.5±0.05	0.5±0.05	0.5±0.05
10 pF	0.3±0.03	0.3±0.03	0.3±0.03	0.5±0.05	0.5±0.05	0.5±0.05	0.5±0.05
12 pF	0.3±0.03	0.3±0.03	0.3±0.03	0.5±0.05	0.5±0.05	0.5±0.05	0.5±0.05
15 pF	0.3±0.03	0.3±0.03	0.3±0.03	0.5±0.05	0.5±0.05	0.5±0.05	0.5±0.05
18 pF	0.3±0.03	0.3±0.03	0.3±0.03	0.5±0.05	0.5±0.05	0.5±0.05	0.5±0.05
22 pF	0.3±0.03	0.3±0.03	0.3±0.03	0.5±0.05	0.5±0.05	0.5±0.05	0.5±0.05
27 pF	0.3±0.03	0.3±0.03	0.3±0.03	0.5±0.05	0.5±0.05	0.5±0.05	0.5±0.05
33 pF	0.3±0.03	0.3±0.03	0.3±0.03	0.5±0.05	0.5±0.05	0.5±0.05	0.5±0.05
39 pF	0.3±0.03	0.3±0.03	0.3±0.03	0.5±0.05	0.5±0.05	0.5±0.05	0.5±0.05
47 pF	0.3±0.03	0.3±0.03	0.3±0.03	0.5±0.05	0.5±0.05	0.5±0.05	0.5±0.05
56 pF	0.3±0.03	0.3±0.03	0.3±0.03	0.5±0.05	0.5±0.05	0.5±0.05	0.5±0.05
68 pF	0.3±0.03	0.3±0.03	0.3±0.03	0.5±0.05	0.5±0.05	0.5±0.05	0.5±0.05
82 pF	0.3±0.03	0.3±0.03	0.3±0.03	0.5±0.05	0.5±0.05	0.5±0.05	0.5±0.05
100 pF	0.3±0.03	0.3±0.03	0.3±0.03	0.5±0.05	0.5±0.05	0.5±0.05	0.5±0.05

NOTE

1. Values in shaded cells indicate thickness class in mm
2. Capacitance value of non E-12 series is on request

Downloaded from Arrow.com.

CAPACITANCE RANGE & THICKNESS FOR NP0

Table 3 Sizes from 0603

CAP.	0603				
	25 V	50 V	100 V	200 V	250 V
0.22 pF					
0.47 pF	0.8±0.1	0.8±0.1	0.8±0.1	0.8±0.1	0.8±0.1
0.82 pF	0.8±0.1	0.8±0.1	0.8±0.1	0.8±0.1	0.8±0.1
1.0 pF	0.8±0.1	0.8±0.1	0.8±0.1	0.8±0.1	0.8±0.1
1.2 pF	0.8±0.1	0.8±0.1	0.8±0.1	0.8±0.1	0.8±0.1
1.5 pF	0.8±0.1	0.8±0.1	0.8±0.1	0.8±0.1	0.8±0.1
1.8 pF	0.8±0.1	0.8±0.1	0.8±0.1	0.8±0.1	0.8±0.1
2.2 pF	0.8±0.1	0.8±0.1	0.8±0.1	0.8±0.1	0.8±0.1
2.7 pF	0.8±0.1	0.8±0.1	0.8±0.1	0.8±0.1	0.8±0.1
3.3 pF	0.8±0.1	0.8±0.1	0.8±0.1	0.8±0.1	0.8±0.1
3.9 pF	0.8±0.1	0.8±0.1	0.8±0.1	0.8±0.1	0.8±0.1
4.7 pF	0.8±0.1	0.8±0.1	0.8±0.1	0.8±0.1	0.8±0.1
5.6 pF	0.8±0.1	0.8±0.1	0.8±0.1	0.8±0.1	0.8±0.1
6.8 pF	0.8±0.1	0.8±0.1	0.8±0.1	0.8±0.1	0.8±0.1
8.2 pF	0.8±0.1	0.8±0.1	0.8±0.1	0.8±0.1	0.8±0.1
10 pF	0.8±0.1	0.8±0.1	0.8±0.1	0.8±0.1	0.8±0.1
12 pF	0.8±0.1	0.8±0.1	0.8±0.1	0.8±0.1	0.8±0.1
15 pF	0.8±0.1	0.8±0.1	0.8±0.1	0.8±0.1	0.8±0.1
18 pF	0.8±0.1	0.8±0.1	0.8±0.1	0.8±0.1	0.8±0.1
22 pF	0.8±0.1	0.8±0.1	0.8±0.1	0.8±0.1	0.8±0.1
27 pF	0.8±0.1	0.8±0.1	0.8±0.1	0.8±0.1	0.8±0.1
33 pF	0.8±0.1	0.8±0.1	0.8±0.1	0.8±0.1	0.8±0.1
39 pF	0.8±0.1	0.8±0.1	0.8±0.1	0.8±0.1	0.8±0.1
47 pF	0.8±0.1	0.8±0.1	0.8±0.1	0.8±0.1	0.8±0.1
56 pF	0.8±0.1	0.8±0.1	0.8±0.1	0.8±0.1	0.8±0.1
68 pF	0.8±0.1	0.8±0.1	0.8±0.1	0.8±0.1	0.8±0.1
82 pF	0.8±0.1	0.8±0.1	0.8±0.1	0.8±0.1	0.8±0.1
100 pF	0.8±0.1	0.8±0.1	0.8±0.1	0.8±0.1	0.8±0.1

NOTE

3. Values in shaded cells indicate thickness class in mm
4. Capacitance value of non E-12 series is on request

Downloaded from Arrow.com.

CAPACITANCE RANGE & THICKNESS FOR NP0

Table 4 Sizes from 0201 to 0402 (continued)

CAP.	0402			
	16 V	25 V	50 V	100 V
120 pF	0.5±0.05	0.5±0.05	0.5±0.05	0.5±0.05
150 pF	0.5±0.05	0.5±0.05	0.5±0.05	0.5±0.05
180 pF	0.5±0.05	0.5±0.05	0.5±0.05	0.5±0.05
220 pF	0.5±0.05	0.5±0.05	0.5±0.05	0.5±0.05
270 pF	0.5±0.05	0.5±0.05	0.5±0.05	0.5±0.05
330 pF	0.5±0.05	0.5±0.05	0.5±0.05	0.5±0.05
390 pF	0.5±0.05	0.5±0.05	0.5±0.05	0.5±0.05
470 pF	0.5±0.05	0.5±0.05	0.5±0.05	0.5±0.05
560 pF	0.5±0.05	0.5±0.05	0.5±0.05	0.5±0.05
680 pF	0.5±0.05	0.5±0.05	0.5±0.05	0.5±0.05
820 pF	0.5±0.05	0.5±0.05	0.5±0.05	0.5±0.05
1.0 nF	0.5±0.05	0.5±0.05	0.5±0.05	0.5±0.05
1.2 nF				
1.5 nF				
1.8 nF				
2.2 nF				
2.7 nF				
3.3 nF				
3.9 nF				
4.7 nF				
5.6 nF				
6.8 nF				
8.2 nF				
10 nF				
12 nF				
15 nF				
18 nF				
22 nF				
33 nF				

NOTE

1. Values in shaded cells indicate thickness class in mm
2. Capacitance value of non E-12 series is on request

Downloaded from Arrow.com.

CAPACITANCE RANGE & THICKNESS FOR NP0

Table 5 Sizes from 0603

CAP.	0603				
	25 V	50 V	100 V	200 V	250 V
120 pF	0.8±0.1	0.8±0.1	0.8±0.1	0.8±0.1	0.8±0.1
150 pF	0.8±0.1	0.8±0.1	0.8±0.1	0.8±0.1	0.8±0.1
180 pF	0.8±0.1	0.8±0.1	0.8±0.1	0.8±0.1	0.8±0.1
220 pF	0.8±0.1	0.8±0.1	0.8±0.1	0.8±0.1	0.8±0.1
270 pF	0.8±0.1	0.8±0.1	0.8±0.1	0.8±0.1	0.8±0.1
330 pF	0.8±0.1	0.8±0.1	0.8±0.1	0.8±0.1	0.8±0.1
390 pF	0.8±0.1	0.8±0.1	0.8±0.1	0.8±0.1	0.8±0.1
470 pF	0.8±0.1	0.8±0.1	0.8±0.1	0.8±0.1	0.8±0.1
560 pF	0.8±0.1	0.8±0.1	0.8±0.1	0.8±0.1	0.8±0.1
680 pF	0.8±0.1	0.8±0.1	0.8±0.1	0.8±0.1	0.8±0.1
820 pF	0.8±0.1	0.8±0.1	0.8±0.1		
1.0 nF	0.8±0.1	0.8±0.1	0.8±0.1		
1.2 nF	0.8±0.1	0.8±0.1	0.8±0.1		
1.5 nF	0.8±0.1	0.8±0.1	0.8±0.1		
1.8 nF	0.8±0.1	0.8±0.1	0.8±0.1		
2.2 nF	0.8±0.1	0.8±0.1	0.8±0.1		
2.7 nF	0.8±0.1	0.8±0.1	0.8±0.1		
3.3 nF	0.8±0.1	0.8±0.1	0.8±0.1		
3.9 nF	0.8±0.1	0.8±0.1	0.8±0.1		
4.7 nF	0.8±0.1	0.8±0.1	0.8±0.1		
5.6 nF	0.8±0.1	0.8±0.1	0.8±0.1		
6.8 nF	0.8±0.1	0.8±0.1	0.8±0.1		
8.2 nF	0.8±0.1	0.8±0.1	0.8±0.1		
10 nF	0.8±0.1	0.8±0.1	0.8±0.1		
12 nF					
15 nF					
18 nF					
22 nF					
33 nF					

NOTE

3. Values in shaded cells indicate thickness class in mm
4. Capacitance value of non E-12 series is on request

Downloaded from Arrow.com.

CAPACITANCE RANGE & THICKNESS FOR NP0

Table 6 Sizes from 0805 to 1206

CAP.	0805					1206				
	25 V	50 V	100 V	200 V	250 V	25 V	50 V	100 V	200 V	250 V
0.22 pF										
0.47 pF	0.6±0.1	0.6±0.1	0.6±0.1	0.6±0.1	0.6±0.1	0.6±0.1	0.6±0.1	0.6±0.1	0.6±0.1	0.6±0.1
0.82 pF	0.6±0.1	0.6±0.1	0.6±0.1	0.6±0.1	0.6±0.1	0.6±0.1	0.6±0.1	0.6±0.1	0.6±0.1	0.6±0.1
1.0 pF	0.6±0.1	0.6±0.1	0.6±0.1	0.6±0.1	0.6±0.1	0.6±0.1	0.6±0.1	0.6±0.1	0.6±0.1	0.6±0.1
1.2 pF	0.6±0.1	0.6±0.1	0.6±0.1	0.6±0.1	0.6±0.1	0.6±0.1	0.6±0.1	0.6±0.1	0.6±0.1	0.6±0.1
1.5 pF	0.6±0.1	0.6±0.1	0.6±0.1	0.6±0.1	0.6±0.1	0.6±0.1	0.6±0.1	0.6±0.1	0.6±0.1	0.6±0.1
1.8 pF	0.6±0.1	0.6±0.1	0.6±0.1	0.6±0.1	0.6±0.1	0.6±0.1	0.6±0.1	0.6±0.1	0.6±0.1	0.6±0.1
2.2 pF	0.6±0.1	0.6±0.1	0.6±0.1	0.6±0.1	0.6±0.1	0.6±0.1	0.6±0.1	0.6±0.1	0.6±0.1	0.6±0.1
2.7 pF	0.6±0.1	0.6±0.1	0.6±0.1	0.6±0.1	0.6±0.1	0.6±0.1	0.6±0.1	0.6±0.1	0.6±0.1	0.6±0.1
3.3 pF	0.6±0.1	0.6±0.1	0.6±0.1	0.6±0.1	0.6±0.1	0.6±0.1	0.6±0.1	0.6±0.1	0.6±0.1	0.6±0.1
3.9 pF	0.6±0.1	0.6±0.1	0.6±0.1	0.6±0.1	0.6±0.1	0.6±0.1	0.6±0.1	0.6±0.1	0.6±0.1	0.6±0.1
4.7 pF	0.6±0.1	0.6±0.1	0.6±0.1	0.6±0.1	0.6±0.1	0.6±0.1	0.6±0.1	0.6±0.1	0.6±0.1	0.6±0.1
5.6 pF	0.6±0.1	0.6±0.1	0.6±0.1	0.6±0.1	0.6±0.1	0.6±0.1	0.6±0.1	0.6±0.1	0.6±0.1	0.6±0.1
6.8 pF	0.6±0.1	0.6±0.1	0.6±0.1	0.6±0.1	0.6±0.1	0.6±0.1	0.6±0.1	0.6±0.1	0.6±0.1	0.6±0.1
8.2 pF	0.6±0.1	0.6±0.1	0.6±0.1	0.6±0.1	0.6±0.1	0.6±0.1	0.6±0.1	0.6±0.1	0.6±0.1	0.6±0.1
10 pF	0.6±0.1	0.6±0.1	0.6±0.1	0.6±0.1	0.6±0.1	0.6±0.1	0.6±0.1	0.6±0.1	0.6±0.1	0.6±0.1
12 pF	0.6±0.1	0.6±0.1	0.6±0.1	0.6±0.1	0.6±0.1	0.6±0.1	0.6±0.1	0.6±0.1	0.6±0.1	0.6±0.1
15 pF	0.6±0.1	0.6±0.1	0.6±0.1	0.6±0.1	0.6±0.1	0.6±0.1	0.6±0.1	0.6±0.1	0.6±0.1	0.6±0.1
18 pF	0.6±0.1	0.6±0.1	0.6±0.1	0.6±0.1	0.6±0.1	0.6±0.1	0.6±0.1	0.6±0.1	0.6±0.1	0.6±0.1
22 pF	0.6±0.1	0.6±0.1	0.6±0.1	0.6±0.1	0.6±0.1	0.6±0.1	0.6±0.1	0.6±0.1	0.6±0.1	0.6±0.1
27 pF	0.6±0.1	0.6±0.1	0.6±0.1	0.6±0.1	0.6±0.1	0.6±0.1	0.6±0.1	0.6±0.1	0.6±0.1	0.6±0.1
33 pF	0.6±0.1	0.6±0.1	0.6±0.1	0.6±0.1	0.6±0.1	0.6±0.1	0.6±0.1	0.6±0.1	0.6±0.1	0.6±0.1
39 pF	0.6±0.1	0.6±0.1	0.6±0.1	0.6±0.1	0.6±0.1	0.6±0.1	0.6±0.1	0.6±0.1	0.6±0.1	0.6±0.1
47 pF	0.6±0.1	0.6±0.1	0.6±0.1	0.6±0.1	0.6±0.1	0.6±0.1	0.6±0.1	0.6±0.1	0.6±0.1	0.6±0.1
56 pF	0.6±0.1	0.6±0.1	0.6±0.1	0.6±0.1	0.6±0.1	0.6±0.1	0.6±0.1	0.6±0.1	0.6±0.1	0.6±0.1
68 pF	0.6±0.1	0.6±0.1	0.6±0.1	0.6±0.1	0.6±0.1	0.6±0.1	0.6±0.1	0.6±0.1	0.6±0.1	0.6±0.1
82 pF	0.6±0.1	0.6±0.1	0.6±0.1	0.6±0.1	0.6±0.1	0.6±0.1	0.6±0.1	0.6±0.1	0.6±0.1	0.6±0.1
100 pF	0.6±0.1	0.6±0.1	0.6±0.1	0.6±0.1	0.6±0.1	0.6±0.1	0.6±0.1	0.6±0.1	0.6±0.1	0.6±0.1

NOTE

1. Values in shaded cells indicate thickness class in mm
2. Capacitance value of non E-12 series is on request

Downloaded from Arrow.com.

CAPACITANCE RANGE & THICKNESS FOR NP0

Table 7 Sizes from 1210

CAP.	1210				
	25 V	50 V	100 V	200 V	250 V
0.22 pF					
0.47 pF					
0.82 pF					
1.0 pF					
1.2 pF					
1.5 pF					
1.8 pF					
2.2 pF					
2.7 pF					
3.3 pF					
3.9 pF					
4.7 pF					
5.6 pF					
6.8 pF					
8.2 pF					
10 pF					
12 pF					
15 pF					
18 pF					
22 pF					
27 pF					
33 pF					
39 pF					
47 pF	1.25±0.2	1.25±0.2	1.25±0.2	1.25±0.2	1.25±0.2
56 pF	1.25±0.2	1.25±0.2	1.25±0.2	1.25±0.2	1.25±0.2
68 pF	1.25±0.2	1.25±0.2	1.25±0.2	1.25±0.2	1.25±0.2
82 pF	1.25±0.2	1.25±0.2	1.25±0.2	1.25±0.2	1.25±0.2
100 pF	1.25±0.2	1.25±0.2	1.25±0.2	1.25±0.2	1.25±0.2

NOTE

3. Values in shaded cells indicate thickness class in mm
4. Capacitance value of non E-12 series is on request

Downloaded from Arrow.com.

CAPACITANCE RANGE & THICKNESS FOR NP0

Table 8 Sizes from 0805 to 1206

CAP.	0805					1206				
	25 V	50 V	100 V	200 V	250 V	25 V	50 V	100 V	200 V	250 V
120 pF	0.6±0.1	0.6±0.1	0.6±0.1	0.6±0.1	0.6±0.1	0.6±0.1	0.6±0.1	0.6±0.1	0.6±0.1	0.6±0.1
150 pF	0.6±0.1	0.6±0.1	0.6±0.1	0.6±0.1	0.6±0.1	0.6±0.1	0.6±0.1	0.6±0.1	0.6±0.1	0.6±0.1
180 pF	0.6±0.1	0.6±0.1	0.6±0.1	0.6±0.1	0.6±0.1	0.6±0.1	0.6±0.1	0.6±0.1	0.6±0.1	0.6±0.1
220 pF	0.6±0.1	0.6±0.1	0.6±0.1	0.85±0.1	0.85±0.1	0.6±0.1	0.6±0.1	0.6±0.1	0.6±0.1	0.6±0.1
270 pF	0.6±0.1	0.6±0.1	0.6±0.1	0.85±0.1	0.85±0.1	0.6±0.1	0.6±0.1	0.6±0.1	0.6±0.1	0.6±0.1
330 pF	0.6±0.1	0.6±0.1	0.6±0.1	0.85±0.1	0.85±0.1	0.6±0.1	0.6±0.1	0.6±0.1	0.6±0.1	0.6±0.1
390 pF	0.6±0.1	0.6±0.1	0.6±0.1	0.85±0.1	0.85±0.1	0.6±0.1	0.6±0.1	0.6±0.1	0.6±0.1	0.6±0.1
470 pF	0.6±0.1	0.6±0.1	0.6±0.1	0.85±0.1	0.85±0.1	0.6±0.1	0.6±0.1	0.6±0.1	0.6±0.1	0.6±0.1
560 pF	0.6±0.1	0.6±0.1	0.6±0.1	0.85±0.1	0.85±0.1	0.6±0.1	0.6±0.1	0.6±0.1	0.6±0.1	0.6±0.1
680 pF	0.6±0.1	0.6±0.1	0.6±0.1	0.85±0.1	0.85±0.1	0.6±0.1	0.6±0.1	0.6±0.1	0.6±0.1	0.6±0.1
820 pF	0.6±0.1	0.6±0.1	0.6±0.1	0.85±0.1	0.85±0.1	0.6±0.1	0.6±0.1	0.6±0.1	0.85± 0.1	0.85± 0.1
1.0 nF	0.6±0.1	0.6±0.1	0.6±0.1	0.85±0.1	0.85±0.1	0.6±0.1	0.6±0.1	0.6±0.1	0.85± 0.1	0.85± 0.1
1.2 nF	0.85±0.1	0.85±0.1	0.85±0.1	1.25±0.2	1.25±0.2	0.6±0.1	0.6±0.1	0.6±0.1	0.85± 0.1	0.85± 0.1
1.5 nF	0.85±0.1	0.85±0.1	0.85±0.1	1.25±0.2	1.25±0.2	0.6±0.1	0.6±0.1	0.6±0.1	0.85± 0.1	0.85± 0.1
1.8 nF	0.85±0.1	0.85±0.1	0.85±0.1	1.25±0.2	1.25±0.2	0.6±0.1	0.6±0.1	0.6±0.1	1.25± 0.2	1.25± 0.2
2.2 nF	1.25±0.2	1.25±0.2	1.25±0.2	1.25±0.2	1.25±0.2	0.6±0.1	0.6±0.1	0.6±0.1	1.25± 0.2	1.25± 0.2
2.7 nF	1.25±0.2	1.25±0.2	1.25±0.2	1.25±0.2	1.25±0.2	0.6±0.1	0.6±0.1	0.6±0.1	1.25± 0.2	1.25± 0.2
3.3 nF	1.25±0.2	1.25±0.2	1.25±0.2	1.25±0.2	1.25±0.2	0.85±0.1	0.85±0.1	0.85±0.1	1.25± 0.2	1.25± 0.2
3.9 nF	1.25±0.2	1.25±0.2	1.25±0.2	1.25±0.2	1.25±0.2	0.85±0.1	0.85±0.1	0.85±0.1	1.25± 0.2	1.25± 0.2
4.7 nF	1.25±0.2	1.25±0.2	1.25±0.2	1.25±0.2	1.25±0.2	0.85±0.1	0.85±0.1	0.85±0.1		
5.6 nF	1.25±0.2	1.25±0.2	1.25±0.2			0.85±0.1	0.85±0.1	0.85±0.1		
6.8 nF	1.25±0.2	1.25±0.2	1.25±0.2			0.85±0.1	0.85±0.1	0.85±0.1		
8.2 nF	1.25±0.2	1.25±0.2	1.25±0.2			1.25±0.2	1.25±0.2	1.25±0.2		
10 nF	1.25±0.2	1.25±0.2	1.25±0.2			1.25±0.2	1.25±0.2	1.25±0.2		
12 nF						0.85±0.1	0.85±0.1	0.85±0.1		
15 nF						0.85±0.1	0.85±0.1	0.85±0.1		
18 nF						0.85±0.1	0.85±0.1	0.85±0.1		
22 nF						0.85±0.1	0.85±0.1	0.85±0.1		
33 nF						0.85±0.1	0.85±0.1	0.85±0.1		
47 nF						1.25±0.2	1.25±0.2	1.25±0.2		
56 nF						1.25±0.2	1.25±0.2	1.25±0.2		
68 nF						1.60±0.2	1.60±0.2	1.60±0.2		
82 nF						1.60±0.2	1.60±0.2	1.60±0.2		
100 nF						1.60±0.2	1.60±0.2	1.60±0.2		

NOTE

1. Values in shaded cells indicate thickness class in mm
2. Capacitance value of non E-12 series is on request

Downloaded from Arrow.com.

CAPACITANCE RANGE & THICKNESS FOR NP0

Table 9 Sizes from 1210

CAP.	1210				
	25 V	50 V	100 V	200 V	250 V
120 pF	1.25±0.2	1.25±0.2	1.25±0.2	1.25±0.2	1.25±0.2
150 pF	1.25±0.2	1.25±0.2	1.25±0.2	1.25±0.2	1.25±0.2
180 pF	1.25±0.2	1.25±0.2	1.25±0.2	1.25±0.2	1.25±0.2
220 pF	1.25±0.2	1.25±0.2	1.25±0.2	1.25±0.2	1.25±0.2
270 pF	1.25±0.2	1.25±0.2	1.25±0.2	1.25±0.2	1.25±0.2
330 pF	1.25±0.2	1.25±0.2	1.25±0.2	1.25±0.2	1.25±0.2
390 pF	1.25±0.2	1.25±0.2	1.25±0.2	1.25±0.2	1.25±0.2
470 pF	1.25±0.2	1.25±0.2	1.25±0.2	1.25±0.2	1.25±0.2
560 pF	1.25±0.2	1.25±0.2	1.25±0.2	1.25±0.2	1.25±0.2
680 pF	1.25±0.2	1.25±0.2	1.25±0.2	1.25±0.2	1.25±0.2
820 pF	1.25±0.2	1.25±0.2	1.25±0.2	1.25±0.2	1.25±0.2
1.0 nF	1.25±0.2	1.25±0.2	1.25±0.2	1.25±0.2	1.25±0.2
1.2 nF	1.25±0.2	1.25±0.2	1.25±0.2	1.25±0.2	1.25±0.2
1.5 nF	1.25±0.2	1.25±0.2	1.25±0.2	1.25±0.2	1.25±0.2
1.8 nF	1.25±0.2	1.25±0.2	1.25±0.2	1.25±0.2	1.25±0.2
2.2 nF	1.25±0.2	1.25±0.2	1.25±0.2	1.25±0.2	1.25±0.2
2.7 nF	1.25±0.2	1.25±0.2	1.25±0.2	1.25±0.2	1.25±0.2
3.3 nF	1.25±0.2	1.25±0.2	1.25±0.2	1.25±0.2	1.25±0.2
3.9 nF	1.25±0.2	1.25±0.2	1.25±0.2	1.25±0.2	1.25±0.2
4.7 nF	1.25±0.2	1.25±0.2	1.25±0.2	1.25±0.2	1.25±0.2
5.6 nF	1.25±0.2	1.25±0.2	1.25±0.2		
6.8 nF	1.25±0.2	1.25±0.2	1.25±0.2		
8.2 nF	1.25±0.2	1.25±0.2	1.25±0.2		
10 nF	1.25±0.2	1.25±0.2	1.25±0.2		
12 nF	1.25±0.2	1.25±0.2	1.25±0.2		
15 nF	1.25±0.2	1.25±0.2	1.25±0.2		
18 nF	1.60±0.2	1.60±0.2	1.60±0.2		
22 nF	1.60±0.2	1.60±0.2	1.60±0.2		
33 nF					
47 nF	1.60±0.2	1.60±0.2			
56 nF					
68 nF					
82 nF					
100 nF					

NOTE

3. Values in shaded cells indicate thickness class in mm
4. Capacitance value of non E-12 series is on request

Downloaded from Arrow.com.

CAPACITANCE RANGE & THICKNESS FOR NP0

Table 10 Sizes 1812

CAP.	1812			
	50 V	100 V	200 V	250 V
10 pF				
12 pF				
15 pF				
18 pF				
22 pF				
27 pF				
33 pF				
39 pF				
47 pF				
56 pF	1.25±0.2			
68 pF	1.25±0.2			
82 pF	1.25±0.2			
100 pF	1.25±0.2			
120 pF	1.25±0.2			
150 pF	1.25±0.2			
180 pF	1.25±0.2			
220 pF	1.25±0.2			
270 pF	1.25±0.2			
330 pF	1.25±0.2	1.25±0.2	1.25±0.2	1.25±0.2
390 pF	1.25±0.2	1.25±0.2	1.25±0.2	1.25±0.2
470 pF	1.25±0.2	1.25±0.2	1.25±0.2	1.25±0.2
560 pF	1.25±0.2	1.25±0.2	1.25±0.2	1.25±0.2
680 pF	1.25±0.2	1.25±0.2	1.25±0.2	1.25±0.2
820 pF	1.25±0.2	1.25±0.2	1.25±0.2	1.25±0.2
1 nF	1.25±0.2	1.25±0.2	1.25±0.2	1.25±0.2
1.2 nF	1.25±0.2	1.25±0.2	1.25±0.2	1.25±0.2
1.5 nF	1.25±0.2	1.25±0.2	1.25±0.2	1.25±0.2
1.8 nF	1.25±0.2	1.25±0.2	1.25±0.2	1.25±0.2
2.2 nF	1.25±0.2	1.25±0.2	1.25±0.2	1.25±0.2
2.7 nF	1.25±0.2	1.25±0.2	1.25±0.2	1.25±0.2
3.3 nF	1.25±0.2	1.25±0.2	1.25±0.2	1.25±0.2
3.9 nF	1.25±0.2	1.25±0.2	1.25±0.2	1.25±0.2
4.7 nF	1.25±0.2	1.25±0.2	1.25±0.2	1.25±0.2
5.6 nF	1.25±0.2	1.25±0.2	1.25±0.2	
6.8 nF	1.25±0.2	1.25±0.2		
8.2 nF	1.25±0.2	1.25±0.2		
10 nF	1.25±0.2	1.25±0.2		
12 nF	1.25±0.2	1.25±0.2		
15 nF	1.25±0.2	1.25±0.2		
18 nF	1.25±0.2	1.25±0.2		
22 nF	1.25±0.2	1.25±0.2		
33 nF	1.25±0.2			

NOTE

1. Values in shaded cells indicate thickness class in mm
2. Capacitance value of non E-12 series is on request

Downloaded from Arrow.com.

PAPER/PE TAPE SPECIFICATION

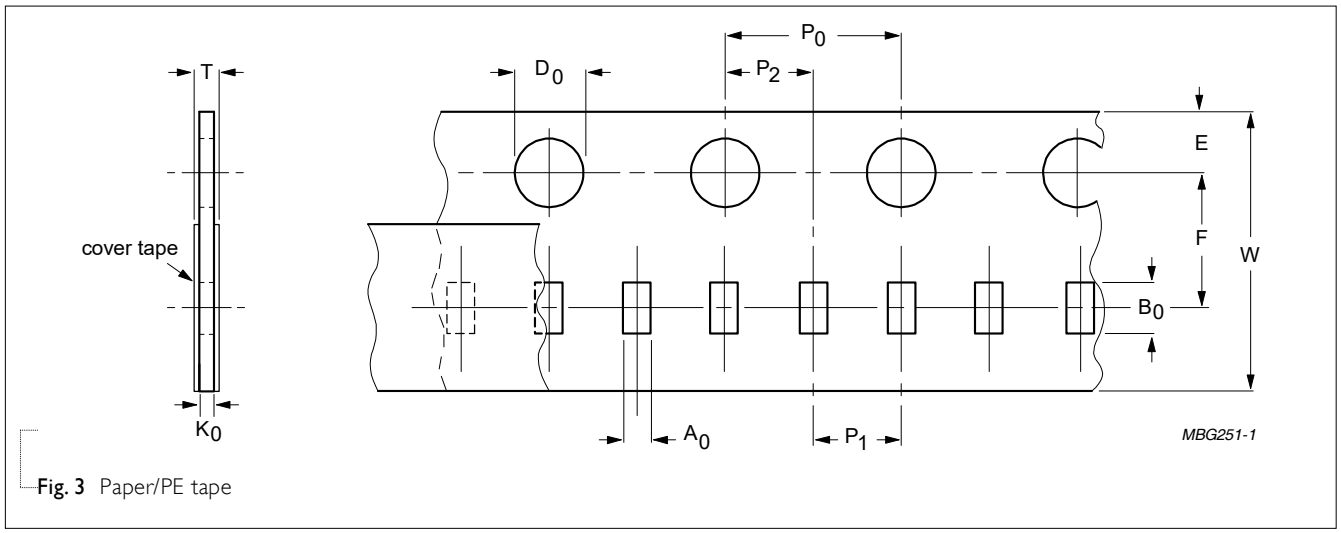

Fig. 3 Paper/PE tape

Table 11 Dimensions of paper/PE tape for relevant chip size; see Fig.3

Unit: mm

SIZE CODE	SYMBOL A_0	B_0	W	E	F	P_0 (1)	P_1	P_2	$\varnothing D_0$	K_0	T
01005	0.24 ±0.03	0.45 ±0.03	8.0 ±0.2	1.75 ±0.1	3.50 ±0.05	4.0 ±0.05	2.0 ±0.05	2.0 ±0.05	1.50 ±0.1	0.24 ± 0.03	0.36 ± 0.01
0201	0.39 ±0.06	0.70 ±0.06	8.0 ±0.2	1.75 ±0.1	3.50 ±0.05	4.0 ±0.05	2.0 ±0.05	2.0 ±0.05	1.55 ±0.03	0.38 ± 0.05	(0.47 / 0.55)±0.10
0402	0.70 ±0.15	1.21 ±0.12	8.0 ±0.2	1.75 ±0.1	3.50 ±0.05	4.0 ±0.05	2.0 ±0.05	2.0 ±0.05	1.50 +0.1 /-0	(0.75 / 0.60)±0.10	(0.85 / 0.70)±0.10
0603	1.05 ±0.14	1.86 ±0.13	8.0 ±0.2	1.75 ±0.1	3.50 ±0.05	4.0 ±0.10	4.0 ±0.10	2.0 ±0.05	1.50 +0.1 /-0	(1.05 / 0.95 / 0.75)±0.10	(1.15 / 1.05 / 0.85)±0.10
0805	1.50 ±0.15	2.26 ±0.20	8.0 ±0.2	1.75 ±0.1	3.50 ±0.05	4.0 ±0.10	4.0 ±0.10	2.0 ±0.05	1.50 +0.1 /-0	(1.05 / 0.95 / 0.75)±0.10	(1.15 / 1.05 / 0.85)±0.10
1206	1.90 ±0.15	3.50 ±0.20	8.0 ±0.2	1.75 ±0.1	3.50 ±0.05	4.0 ±0.10	4.0 ±0.10	2.0 ±0.05	1.50 +0.1 /-0	(0.95 / 0.75)±0.10	(1.05 / 0.85)± 0.10
4 × 0402	1.50 ±0.15	2.26 ±0.20	8.0 ±0.2	1.75 ±0.1	3.50 ±0.05	4.0 ±0.10	4.0 ±0.10	2.0 ±0.05	1.50 +0.1 /-0	(1.05 / 0.95 / 0.75)±0.10	(1.15 / 1.05 / 0.85)±0.10
4 × 0603	1.90 ±0.15	3.50 ±0.20	8.0 ±0.2	1.75 ±0.1	3.50 ±0.05	4.0 ±0.10	4.0 ±0.10	2.0 ±0.05	1.50 +0.1 /-0	(0.95 / 0.75)±0.10	(1.05 / 0.85)±0.10
0508	1.50 ±0.15	2.26 ±0.20	8.0 ±0.2	1.75 ±0.1	3.50 ±0.05	4.0 ±0.10	4.0 ±0.10	2.0 ±0.05	1.50 +0.1 /-0	(1.05 / 0.95 / 0.75)±0.10	(1.15 / 1.05 / 0.85)±0.10
0612	1.90 ±0.15	3.50 ±0.20	8.0 ±0.2	1.75 ±0.1	3.50 ±0.05	4.0 ±0.10	4.0 ±0.10	2.0 ± .05	1.50 +0.1 /-0	(0.95 / 0.75)±0.10	(1.05 / 0.85)±0.10

NOTE

1. P_0 pitch tolerance over any 10 pitches is ±0.2 mm
2. 4 x 0402 stands for 0508 array
3. 4 x 0603 stands for 0612 array

Downloaded from Arrow.com.

BLISTER TAPE SPECIFICATION

For dimension see Table 4

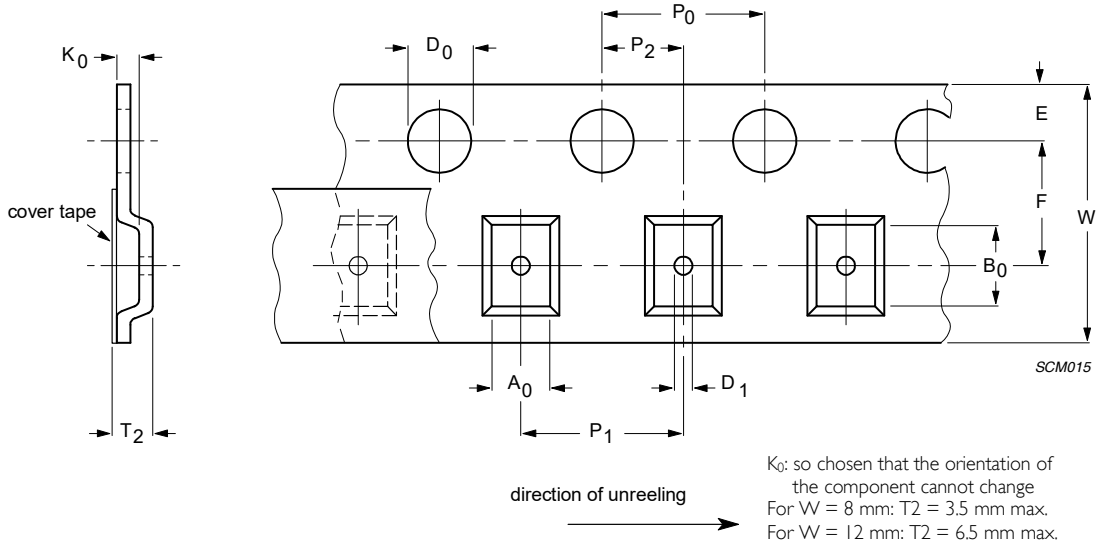

Fig. 4 Blister tape

Table 12 Dimensions of blister tape for relevant chip size; see Fig.4

Unit: mm

SIZE CODE	SYMBOL															
	A_0		B_0		K_0		W	E	F	$\varnothing D_0$	$\varnothing D_1$	P_0 (2)	P_1	P_2	T2	
	Min.	Max.	Min.	Max.	Min.	Max.					Min.				Min.	Max.
0805	1.29	1.65	2.09	2.60	1.25	1.62	8.1 ±0.20	1.75 ±0.1	3.5 ±0.05	1.5 +0.1/-0.0	1 +0.1/-0.0	4.0 ±0.10	4.0 ±0.10	2.0 ±0.05	1.30	1.67
1206	1.65	2.12	3.30	3.75	1.22	2.15	8.1 ±0.20	1.75 ±0.1	3.5 ±0.05	1.5 +0.1/-0.0	1 +0.1/-0.0	4.0 ±0.10	4.0 ±0.10	2.0 ±0.05	1.27	2.20
1210	2.55	3.02	3.31	3.88	0.97	2.92	8.1 ±0.20	1.75 ±0.1	3.5 ±0.05	1.5 +0.1/-0.0	1 +0.1/-0.0	4.0 ±0.10	4.0 ±0.10	2.0 ±0.05	1.02	2.97
1808	2.05	2.55	4.80	5.45	1.30	2.45	12.1 ±0.20	1.75 ±0.1	5.5 ±0.05	1.5 +0.1/-0.0	1.5 +0.1/-0.0	4.0 ±0.10	4.0 ±0.10	2.0 ±0.05	1.35	2.50
1812	3.35	3.75	4.70	5.33	0.70	2.40	12.1 ±0.20	1.75 ±0.1	5.5 ±0.05	1.5 +0.1/-0.0	1.5 +0.1/-0.0	4.0 ±0.10	8.0 ±0.10	2.0 ±0.05	0.75	2.45
2220	5.12	5.32	5.84	6.04	1.28	1.48	12.0 ±0.20	1.75 ±0.1	5.5 ±0.05	1.5 +0.1/-0.0	1.5 +0.1/-0.0	4.0 ±0.10	8.0 ±0.10	2.0 ±0.05	1.33	1.53

NOTE

1. Typical capacitor displacement in pocket
2. P_0 pitch tolerance over any 10 pitches is ±0.2 mm

Downloaded from Arrow.com.

REEL SPECIFICATION

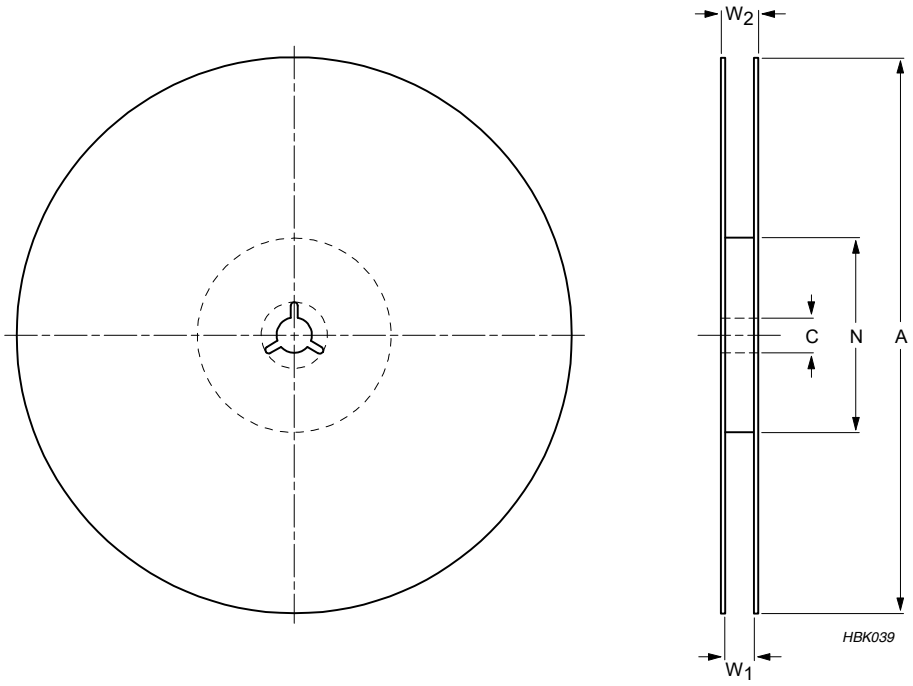

Fig. 5 Reel

Table 13 Reel dimensions; see Fig.5

TAPE WIDTH	SYMBOL				Unit: mm
	A	N	C	W_1	$W_{2max.}$
8 (Ø178 mm/7")	178 ±1.0	60 ±1.0	13 +0.50/-0.20	9.4 ±1.5	14.4
8 (Ø330 mm/13")	330 ±1.0	100 ±1.0	13 +0.50/-0.20	9.0 ±0.2	14.4
12 (Ø178 mm/7")	178 ±1.0	60 ±1.0	13 +0.50/-0.20	13.4 ±1.5	18.4

PROPERTIES OF REEL

Material: polystyrene

Surface resistance: $<10^{10}$ Ω/sq.

Downloaded from Arrow.com.

THICKNESS CLASSES AND PACKING QUANTITY

Table 14

SIZE CODE	THICKNESS CLASSIFICATION	TAPE WIDTH QUANTITY PER REEL	Ø180 MM / 7 INCH		Ø330 MM / 13 INCH		QUANTITY PER BULK CASE
			Paper/PE	Blister	Paper/PE	Blister	
0201	0.3 ±0.03 mm	8 mm	15,000	---	50,000	---	---
0402	0.5 ±0.05 mm	8 mm	10,000	---	50,000	---	50,000
0603	0.8 ±0.1 mm	8 mm	4,000	---	15,000	---	15,000
0805	0.6 ±0.1 mm	8 mm	4,000	---	20,000	---	10,000
	0.85 ±0.1 mm	8 mm	4,000	---	15,000	---	8,000
	1.25 ±0.2 mm	8 mm	---	3,000	---	10,000	5,000
1206	0.6 ±0.1 mm	8 mm	4,000	---	20,000	---	---
	0.85 ±0.1 mm	8 mm	4,000	---	15,000	---	---
	1.00 / 1.15 ±0.1 mm	8 mm	---	3,000	---	10,000	---
	1.25 ±0.2 mm	8 mm	---	3,000	---	10,000	---
	1.6 ±0.15 mm	8 mm	---	2,500	---	10,000	---
	1.6 ±0.2 mm	8 mm	---	2,000	---	8,000	---
1210	0.6 / 0.7 ±0.1 mm	8 mm	---	4,000	---	15,000	---
	0.85 ±0.1 mm	8 mm	---	4,000	---	10,000	---
	1.15 ±0.1 mm	8 mm	---	3,000	---	10,000	---
	1.15 ±0.15 mm	8 mm	---	3,000	---	10,000	---
	1.25 ±0.2 mm	8 mm	---	3,000	---	---	---
	1.5 ±0.1 mm	8 mm	---	2,000	---	---	---
	1.6 / 1.9 ±0.2 mm	8 mm	---	2,000	---	---	---
	2.0 ±0.2 mm	8 mm	---	2,000 1,000	---	---	---
	2.5 ±0.2 mm	8 mm	---	1,000 500	---	---	---
1808	1.15 ±0.15 mm	12 mm	---	3,000	---	---	---
	1.25 ±0.2 mm	12 mm	---	3,000	---	---	---
	1.35 ±0.15 mm	12 mm	---	2,000	---	---	---
	1.5 ±0.1 mm	12 mm	---	2,000	---	---	---
	1.6 ±0.2 mm	12 mm	---	2,000	---	---	---
	2.0 ±0.2 mm	12 mm	---	2,000	---	---	---
1812	0.6 / 0.85 ±0.1 mm	12 mm	---	2,000	---	---	---
	1.15 ±0.1 mm	12 mm	---	1,000	---	---	---
	1.25 ±0.2 mm	12 mm	---	1,000	---	---	---
	1.5 ±0.1 mm	12 mm	---	1,000	---	---	---
	1.6 ±0.2 mm	12 mm	---	1,000	---	---	---
	2.0 ±0.2 mm	12 mm	---	1,000	---	---	---
	2.5 ±0.2 mm	12 mm	---	500	---	---	---

Downloaded from Arrow.com.

ELECTRICAL CHARACTERISTICS

NP0 DIELECTRIC CAPACITORS; NISN TERMINATIONS

Unless otherwise stated all electrical values apply at an ambient temperature of 20±1 °C, an atmospheric pressure of 86 to 106 kPa, and a relative humidity of 63 to 67%.

Table 15

DESCRIPTION		VALUE
Capacitance range		0.22 pF to 100 nF
Capacitance tolerance		
	C < 10 pF	±0.1 pF, ±0.25 pF, ±0.5 pF
	C ≥ 10 pF	±1%, ±2%, ±5%, ±10%
Dissipation factor (D.F.)		
	C < 30 pF	≤ 1 / (400 + 20C)
	C ≥ 30 pF	≤ 0.1 %
Insulation resistance after 1 minute at U_r (DC)		R_{ins} ≥ 10 GΩ or R_{ins} × C_r ≥ 500 seconds whichever is less
Maximum capacitance change as a function of temperature (temperature characteristic/coefficient):		±30 ppm/°C
Operating temperature range:		–55 °C to +125 °C

Sample limits (broken lines).
Requirement levels (dotted lines)

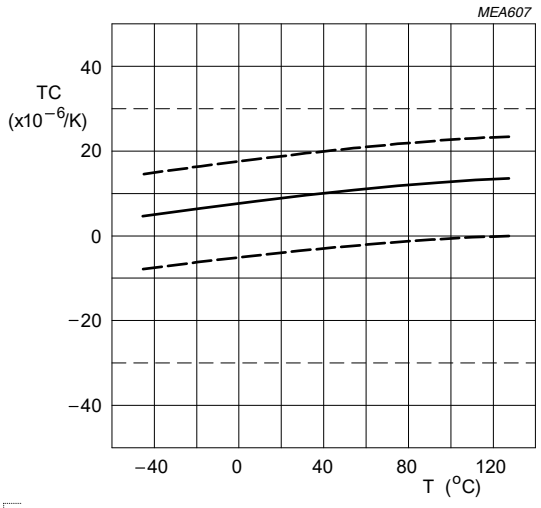

Fig. 6 Typical temperature coefficient as a function of temperature

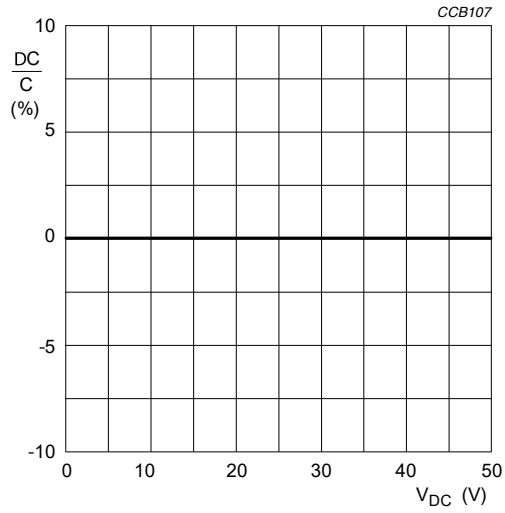

Fig. 7 Typical capacitance change with respect to the capacitance at 1 V as a function of DC voltage

Downloaded from Arrow.com.

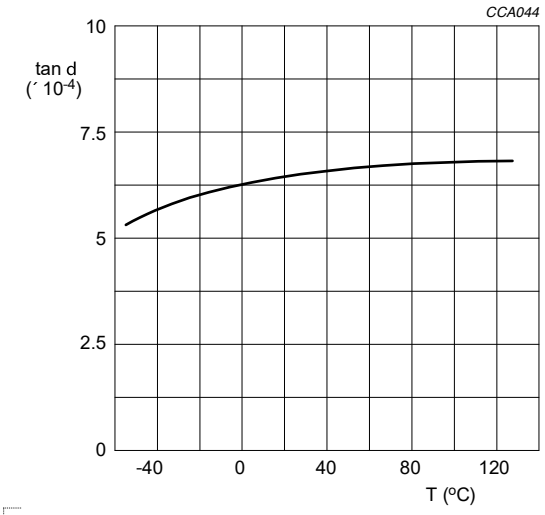

Fig. 8 Typical tan δ as a function of temperature

SOLDERING RECOMMENDATION

Table 16

SOLDERING METHOD	SIZE 0201	0402	0603	0805	1206	≥ 1210
Reflow	○	○	○	○	○	○
Wave	---	---	○	○	○	---

Downloaded from Arrow.com.

TESTS AND REQUIREMENTS

Table 17 Test procedures and requirements

TEST	TEST METHOD		PROCEDURE	REQUIREMENTS
Mounting	IEC 60384-21/22	4.3	The capacitors may be mounted on printed-circuit boards or ceramic substrates	No visible damage
Visual inspection and dimension check		4.4	Any applicable method using × 10 magnification	In accordance with specification
Capacitance		4.5.1	Class 1: f = 1 MHz for C ≤ 1 nF, measuring at voltage 1 V_{rms} at 20 °C f = 1 KHz for C > 1 nF, measuring at voltage 1 V_{rms} at 20 °C	Within specified tolerance
Dissipation factor (D.F.)		4.5.2	Class 1: f = 1 MHz for C ≤ 1 nF , measuring at voltage 1 V_{rms} at 20 °C f = 1 KHz for C > 1 nF, measuring at voltage 1 V_{rms} at 20 °C	In accordance with specification
Insulation resistance		4.5.3	At U_r (DC) for 1 minute	In accordance with specification
Temperature coefficient		4.6	Capacitance shall be measured by the steps shown in the following table. The capacitance change should be measured after 5 min at each specified temperature stage.	Class1: Δ C/C: ±30ppm

Step	Temperature(°C)
a	25±2
b	Lower temperature±3 °C
c	25±2
d	Upper Temperature±2 °C
e	25±2

(1) Class I

Temperature Coefficient shall be calculated from the formula as below

$$\text{Temp, Coefficient} = \frac{C2 - C1}{C1 \times \Delta T} \times 10^6 \ [\text{ppm/°C}]$$

C1: Capacitance at step c

C2: Capacitance at 125 °C

ΔT: 100°C (=125°C -25 °C)

(2) Class II

Capacitance Change shall be calculated from the formula as below

$$\Delta C = \frac{C2 - C1}{C1} \times 100\%$$

C1: Capacitance at step c

C2: Capacitance at step b or d

Downloaded from Arrow.com.

TEST	TEST METHOD	PROCEDURE	REQUIREMENTS
Adhesion	4.7	A force applied for 10 seconds to the line joining the terminations and in a plane parallel to the substrate	Force size ≥ 0603: 5N size = 0402: 2.5N size = 0201: 1N
Bond strength of plating on end face	4.8	Mounting in accordance with IEC 60384-22 paragraph 4.3 Conditions: bending 1 mm at a rate of 1 mm/s, radius jig 5 mm	No visible damage ΔC/C Class 1: NP0: within ±1% or 0.5 pF whichever is greater
Resistance to soldering heat	IEC 60384-21/22 4.9	Precondition: 150 +0/–10 °C for 1 hour, then keep for 24 ±1 hours at room temperature Preheating: for size ≤ 1206: 120 °C to 150 °C for 1 minute Preheating: for size >1206: 100 °C to 120 °C for 1 minute and 170 °C to 200 °C for 1 minute Solder bath temperature: 260 ±5 °C Dipping time: 10 ±0.5 seconds Recovery time: 24 ±2 hours	Dissolution of the end face plating shall not exceed 25% of the length of the edge concerned ΔC/C Class 1: NP0: within ±0.5% or 0.5 pF whichever is greater D.F. within initial specified value R_{ins} within initial specified value
Solderability	4.10	Preheated the temperature of 80 °C to 140 °C and maintained for 30 seconds to 60 seconds. 1. Temperature: 235±5°C / Dipping time: 2 ±0.5 s 2. Temperature: 245±5°C / Dipping time: 3 ±0.5 s (lead free) Depth of immersion: 10mm	The solder should cover over 95% of the critical area of each termination
Rapid change of temperature	4.11	Preconditioning: 150 +0/–10 °C for 1 hour, then keep for 24 ±1 hours at room temperature 5 cycles with following detail: 30 minutes at lower category temperature 30 minutes at upper category temperature Recovery time 24 ±2 hours	No visual damage ΔC/C Class 1: NP0: within ±1% or 1 pF whichever is greater D.F. meet initial specified value R_{ins} meet initial specified value

Downloaded from Arrow.com.

TEST	TEST METHOD		PROCEDURE	REQUIREMENTS
Damp heat with U_r load	IEC 60384-21/22	4.13	1. Preconditioning, class 2 only: 150 +0/-10 °C / 1 hour, then keep for 24 ±1 hour at room temp 2. Initial measure: Spec: refer to initial spec C, D, IR 3. Damp heat test: 500 ±12 hours at 40 ±2 °C; 90 to 95% R.H. 1.0 U_r applied. 4. Recovery: Class 1: 6 to 24 hours 5. Final measure: C, D, IR P.S. If the capacitance value is less than the minimum value permitted, then after the other measurements have been made the capacitor shall be preconditioned according to *"IEC 60384 4.1"* and then the requirement shall be met.	No visual damage after recovery ΔC/C Class 1: NP0: within ±2% or 1 pF whichever is greater D.F. Class 1: NP0: ≤ 2 × specified value R_{ins} Class 1: NP0: ≥ 2,500 MΩ or $R_{ins} \times C_r \geq 25s$ whichever is less
Endurance		4.14	1. Preconditioning, class 2 only: 150 +0/-10 °C / 1 hour, then keep for 24 ±1 hour at room temp 2. Initial measure: Spec: refer to initial spec C, D, IR 3. Endurance test: Temperature: NP0: 125 °C Specified stress voltage applied for 1,000 hours: Applied 2.0 × U_r for general product. 4. High voltage series follows with below stress condition: (table) * NPO, 0603, 100V, 5.1nF to 10nF, apply voltage : 1.5 x Ur 5. Recovery time: 24 ±2 hours 6. Final measure: C, D, IR P.S. If the capacitance value is less than the minimum value permitted, then after the other measurements have been made the capacitor shall be preconditioned according to *"IEC 60384 4.1"* and then the requirement shall be met.	No visual damage ΔC/C Class1: NP0: within ±2% or 1 pF whichever is greater D.F. Class1: NP0: ≤ 2 × specified value R_{ins} Class1: NP0: ≥ 4,000 MΩ or $R_{ins} \times C_r \geq 40s$ whichever is less
Voltage proof	IEC 60384-1	4.6	Specified stress voltage applied for 1 minute $U_r \leq 100$ V: series applied 2.5 U_r 100 V < $U_r \leq 200$ V series applied (1.5 U_r + 100) 200 V < $U_r \leq 500$ V series applied (1.3 U_r + 100) $U_r > 500$ V: 1.3 U_r I: 7.5 mA	No breakdown or flashover

Voltage	NPO
≤ 100V	2.0 x Ur
200/250V	1.5 x Ur
500/630V	1.3 x Ur
≥ 1KV	1.2 x Ur

Downloaded from Arrow.com.

REVISION HISTORY

REVISION	DATE	CHANGE NOTIFICATION	DESCRIPTION
Version 22	Nov. 25, 2025	-	- Update 0805, 200 to 250V: 220pF to 1nF dimension typo from 0.6 to 0.85mm, 1.2nF to 1.8nF dimension typo from 0.85mm to 1.25mm.
Version 21	May 14, 2025	-	- Add 1206, 12nF to 82nF, 100V
Version 20	Mar. 11, 2025	-	- Add 1206, 100nF, 100V
Version 19	Jan. 29, 2024	-	- Add 100 V to 250 V product range
Version 19	Jan. 29, 2024	-	- Add 100 V to 250 V product range
Version 18	Jun. 14, 2023	-	- Update 1206/12nF to 47nF dimension
Version 17	Jul. 29, 2019	-	- Update 0805/10nF dimension
Version 16	Mar. 7, 2017	-	- 0805 L4 spec updated
Version 15	Nov. 21, 2016	-	- Product range updated
Version 14	Jul. 22, 2016	-	- Add 0805/8.2nF and 10nF/ 16V to 50V, T=1.25mm
Version 13	May. 16, 2016	-	- Product range updated
Version 12	Feb. 16, 2016	-	- Product range updated
Version 11	Sep. 11, 2014	-	- Product range updated
Version 10	Feb. 18, 2014	-	- Product range updated
Version 9	Jun. 17, 2013	-	- Product range updated
Version 8	Aug 05, 2011	-	- Dimension updated
Version 7	Jun 14, 2011	-	- Size1210 T=1.0mm SPQ added - Dimension updated
Version 6	Jan 06, 2011	-	- Dimension updated
Version 5	Dec 29, 2010	-	- Dimension updated
Version 4	Nov 23, 2010	-	- Dimension updated
Version 3	Apr 20, 2010	-	- The statement of "Halogen Free" on the cover added - Dimension updated
Version 2	Oct 26, 2009	-	- Typo updated
Version 1	Jun 02, 2009	-	- 12NC code updated
Version 0	Apr 15, 2009	-	- New datasheet for general purpose NP0 series with RoHS compliant - Replace the "16V to 50V" part of pdf files: NP0_16V_7, NP0_16V-to-100V_6, NP0_25V_7, NP0_50-to-500V_11 - Combine 0201 from pdf files: UP-NP0X5RX7RY5V_0201_6.3-to-50V_2 and UY-NPOX5RX7RY5V_0201_6.3-to-50V_2 - Define global part number - Description of "Halogen Free compliant" added - Test method and procedure updated

Downloaded from Arrow.com.

LEGAL DISCLAIMER

YAGEO, its distributors and agents (collectively, "YAGEO"), hereby disclaims any and all liabilities for any errors, inaccuracies or incompleteness contained in any product related information, including but not limited to product specifications, datasheets, pictures and/or graphics. YAGEO may make changes, modifications and/or improvements to product related information at any time and without notice.

YAGEO makes no representation, warranty, and/or guarantee about the fitness of its products for any particular purpose or the continuing production of any of its products. To the maximum extent permitted by law, YAGEO disclaims (i) any and all liability arising out of the application or use of any YAGEO product, (ii) any and all liability, including without limitation special, consequential or incidental damages, and (iii) any and all implied warranties, including warranties of fitness for a particular purpose, non -infringement and merchantability.

YAGEO products are designed for general purpose applications under normal operation and usage conditions. Please contact YAGEO for the applications listed below which require especially high reliability for the prevention of defects which might directly cause damage to the third party's life, body or property: Aerospace equipment (artificial satellite, rocket, etc.), Atomic energy-related equipment, Aviation equipment, Disaster prevention equipment, crime prevention equipment, Electric heating apparatus, burning equipment, Highly public information network equipment, data-processing equipment , Medical devices, Military equipment, Power generation control equipment, Safety equipment, Traffic signal equipment, Transportation equipment and Undersea equipment, or for any other application or use in which the failure of YAGEO products could result in personal injury or death, or serious property damage. Particularly **YAGEO Corporation and its affiliates do not recommend the use of commercial, automotive, and/or COTS grade products for high reliability applications or manned space flight.**

Information provided here is intended to indicate product specifications only. YAGEO reserves all the rights for revising this content without further notification, as long as products are unchanged. Any product change will be announced by PCN.

Downloaded from Arrow.com.