ECS-.327-CDX-2217
SMD CRYSTAL

The ultra-minature ECS-.327-CDX-2217 is a very compact SMD Tuning Fork Crystal with a ESR of 80KΩ and a tolerance of ±20 ppm. The 1.6 x 1.0 x 0.5 mm ceramic package is ideal for IOT applications.

Request a Sample

ECS-.327-CDX-2217

- Low Profile 0.5 mm Max.
- 1.6 x 1.0 mm Footprint
- ±20 ppm tolerance @ +25°C
- Extended Temp. Range
- RoHS Compliant
- Low Power RTC Applications such as STM32 AN2867

OPERATING CONDITIONS / ELECTRICAL CHARACTERISTICS

PARAMETERS	CONDITIONS	ECS-.327-CDX-2217			UNITS
		MIN	TYP	MAX	
Frequency			32.768		KHz
Frequency Tolerance	@ +25°C			± 20	ppm
Load Capacitance			12.5		pF
Drive Level	D_L		0.1	0.5	µW
Equivalent Series Resistance	R_1			80K	Ω
Turnover Temperature		+20	+25	+30	°C
Temperature Coefficient		-0.028	-0.034	-0.040	ppm/°C²
Shunt Capacitance	Co		1.3		pF
Aging (First Year)	@ +25°C ±3°C			±3	ppm
Operating Temperature	T_{opr}	-40		+85	°C
Storage Temperature	T_{stg}	-55		+125	°C
Insulation Resistance	@ 100V DC	500M			Ω

DIMENSIONS (mm)

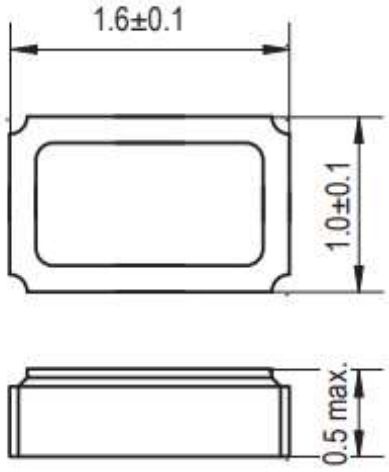

Figure 1) *Top, Side, and Bottom views*

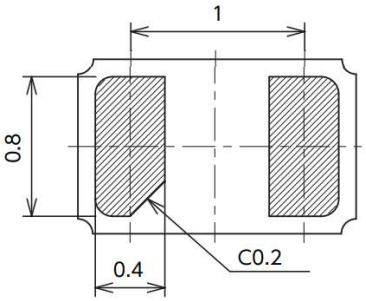

PAD CONNECTIONS	
1	In/Out
2	Out/In

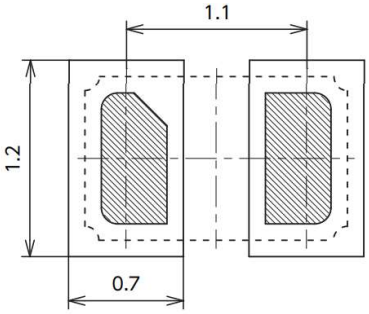

Figure 2) *Suggested Land Pattern*

Part Number: ECS-.327-CDX-2217

Rev.2021

Downloaded from Arrow.com.

POCKET TAPE DIMENSIONS (mm)

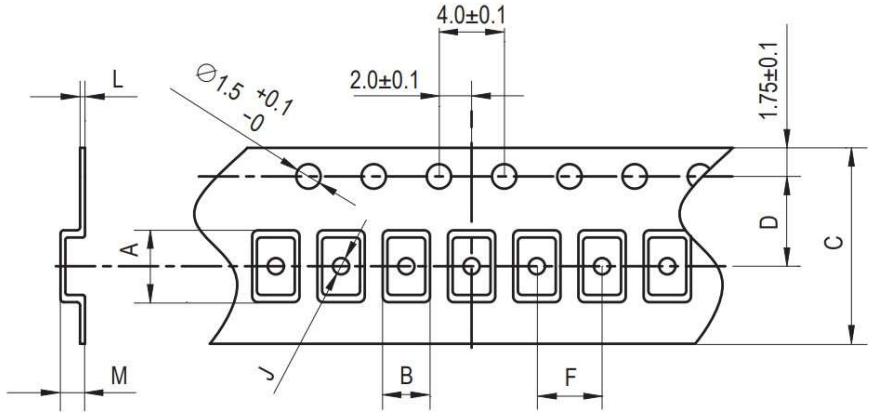

A	B	C	D	F	J	L	M	Reel Dia.	Qty/Reel
1.85	1.25	8.0	3.5	4.0	0.5	0.25	0.65	180	3000pcs

SOLDER PROFILE
Peak solder Temp +260°C Max 10 sec Max.
2 Cycles Max.
MSL 1, Lead Finish Au

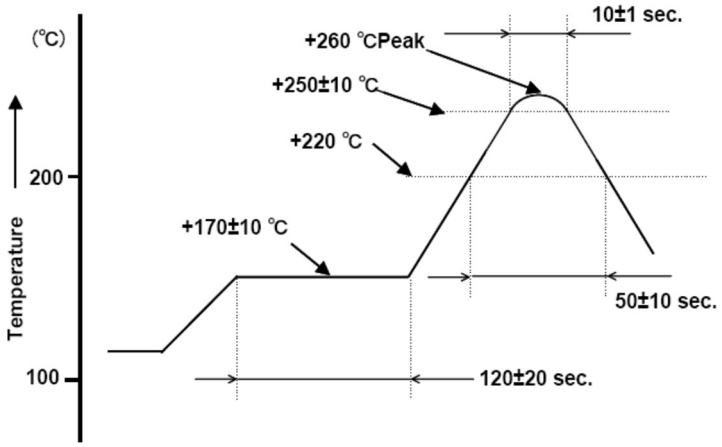

Figure 1) *Suggested Reflow Profile*

Downloaded from Arrow.com.