MOSFETs Silicon N-channel MOS (U-MOSⅧ-H)

TPW1500CNH

1. Applications

- High-Efficiency DC-DC Converters
- Switching Voltage Regulators

2. Features

(1) High-speed switching
(2) Small gate charge: Q_{SW} = 8.2 nC (typ.)
(3) Low drain-source on-resistance: $R_{DS(ON)}$ = 13 mΩ (typ.) (V_{GS} = 10 V)
(4) Low leakage current: I_{DSS} = 10 μA (max) (V_{DS} = 150 V)
(5) Enhancement mode: V_{th} = 2.0 to 4.0 V (V_{DS} = 10 V, I_D = 1.0 mA)

3. Packaging and Internal Circuit

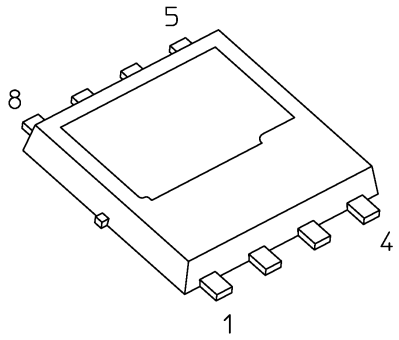

DSOP Advance

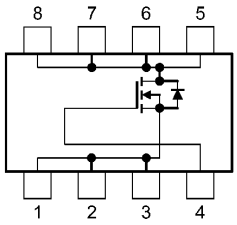

1, 2, 3: Source
4: Gate
5, 6, 7, 8: Drain

Start of commercial production
2015-06

©2026
Toshiba Electronic Devices & Storage Corporation

Downloaded from Arrow.com.

4. Absolute Maximum Ratings (Note) (T_a = 25 °C unless otherwise specified)

Characteristics			Symbol	Rating	Unit
Drain-source voltage			V_{DSS}	150	V
Gate-source voltage			V_{GSS}	±20	
Drain current (DC)	(T_c = 25 °C) (Bottom drain)	(Note 1)	I_D	38	A
Drain current (DC)	(Silicon limit)	(Note 1), (Note 2)	I_D	50	
Drain current (pulsed)	(t = 100 μs)	(Note 1)	I_{DP}	220	
Power dissipation	(T_c = 25 °C) (Bottom drain)		P_D	142	W
Power dissipation		(Note 3)	P_D	2.5	
Power dissipation		(Note 4)	P_D	0.8	
Single-pulse avalanche energy		(Note 5)	E_{AS}	198	mJ
Single-pulse avalanche current		(Note 5)	I_{AS}	38	A
Channel temperature			T_{ch}	150	°C
Storage temperature			T_{stg}	-55 to 150	

Note: Using continuously under heavy loads (e.g. the application of high temperature/current/voltage and the significant change in temperature, etc.) may cause this product to decrease in the reliability significantly even if the operating conditions (i.e. operating temperature/current/voltage, etc.) are within the absolute maximum ratings.
Please design the appropriate reliability upon reviewing the Toshiba Semiconductor Reliability Handbook ("Handling Precautions"/"Derating Concept and Methods") and individual reliability data (i.e. reliability test report and estimated failure rate, etc).

5. Thermal Characteristics

Characteristics			Symbol	Max	Unit
Channel-to-case thermal resistance	Bottom drain (T_c = 25 °C)		$R_{th(ch-c)}$	0.88	°C/W
Channel-to-case thermal resistance	Top source (T_c = 25 °C)		$R_{th(ch-c)}$	0.93	°C/W
Channel-to-ambient thermal resistance	(T_a = 25 °C)	(Note 3)	$R_{th(ch-a)}$	50	°C/W
Channel-to-ambient thermal resistance	(T_a = 25 °C)	(Note 4)	$R_{th(ch-a)}$	156	°C/W

Note 1: Ensure that the channel temperature does not exceed 150 °C.
Note 2: Limited by silicon chip capability.
Note 3: Device mounted on a glass-epoxy board (a), Figure 5.1
Note 4: Device mounted on a glass-epoxy board (b), Figure 5.2
Note 5: V_{DD} = 60 V, T_{ch} = 25 °C (initial), L = 190 μH, I_{AS} = 38 A

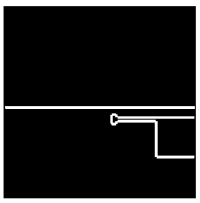

FR-4
25.4 × 25.4 × 1.6
(Unit: mm)
2 oz copper

Fig. 5.1 Device Mounted on a Glass-Epoxy Board (a)

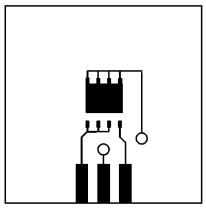

FR-4
25.4 × 25.4 × 1.6
(Unit: mm)
2 oz copper

Fig. 5.2 Device Mounted on a Glass-Epoxy Board (b)

Note: This transistor is sensitive to electrostatic discharge and should be handled with care.

Downloaded from Arrow.com.

6. Electrical Characteristics

6.1. Static Characteristics (T_a = 25 °C unless otherwise specified)

Characteristics	Symbol	Test Condition	Min	Typ.	Max	Unit
Gate leakage current	I_{GSS}	V_{GS} = ±20 V, V_{DS} = 0 V	—	—	±0.1	μA
Drain cut-off current	I_{DSS}	V_{DS} = 150 V, V_{GS} = 0 V	—	—	10	
Drain-source breakdown voltage	$V_{(BR)DSS}$	I_D = 10 mA, V_{GS} = 0 V	150	—	—	V
	$V_{(BR)DSX}$	I_D = 10 mA, V_{GS} = -20 V	105	—	—	
Gate threshold voltage	V_{th}	V_{DS} = 10 V, I_D = 1.0 mA	2.0	—	4.0	
Drain-source on-resistance	$R_{DS(ON)}$	V_{GS} = 10 V, I_D = 19 A	—	13	15.4	mΩ

6.2. Dynamic Characteristics (T_a = 25 °C unless otherwise specified)

Characteristics	Symbol	Test Condition	Min	Typ.	Max	Unit
Input capacitance	C_{iss}	V_{DS} = 75 V, V_{GS} = 0 V, f = 1 MHz	—	1700	2200	pF
Reverse transfer capacitance	C_{rss}		—	7.0	50	
Output capacitance	C_{oss}		—	280	—	
Gate resistance	r_g	—	—	4.0	6.0	Ω
Switching time (rise time)	t_r	See Fig. 6.2.1	—	8.0	—	ns
Switching time (turn-on time)	t_{on}		—	20	—	
Switching time (fall time)	t_f		—	12	—	
Switching time (turn-off time)	t_{off}		—	36	—	

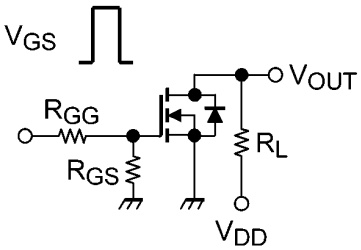

V_{DD} ≈ 75 V
V_{GS} = 0 V/10 V
I_D = 19 A
R_L = 3.95 Ω
R_{GG} = 4.7 Ω
R_{GS} = 4.7 Ω
Duty ≤ 1 %, t_w = 10 μs

Fig. 6.2.1 Switching Time Test Circuit

6.3. Gate Charge Characteristics (T_a = 25 °C unless otherwise specified)

Characteristics	Symbol	Test Condition	Min	Typ.	Max	Unit
Total gate charge (gate-source plus gate-drain)	Q_g	V_{DD} ≈ 75 V, V_{GS} = 10 V, I_D = 38 A	—	22	—	nC
Gate-source charge 1	Q_{gs1}		—	9.0	—	nC
Gate-drain charge	Q_{gd}		—	4.4	—	
Gate switch charge	Q_{SW}		—	8.2	—	

6.4. Source-Drain Characteristics (T_a = 25 °C unless otherwise specified)

Characteristics	Symbol	Test Condition	Min	Typ.	Max	Unit
Reverse drain current (pulsed) (Note 6)	I_{DRP}	—	—	—	220	A
Diode forward voltage	V_{DSF}	I_{DR} = 38 A, V_{GS} = 0 V	—	—	-1.2	V
Reverse recovery time	t_{rr}	V_R = 75 V, I_{DR} = 9.5 A, V_{GS} = 0 V, $-dI_{DR}/dt$ = 100 A/μs	—	85	—	ns
Reverse recovery charge	Q_{rr}		—	192	—	nC

Note 6: Ensure that the channel temperature does not exceed 150 °C.

©2026
Toshiba Electronic Devices & Storage Corporation

Downloaded from Arrow.com.

7. Marking

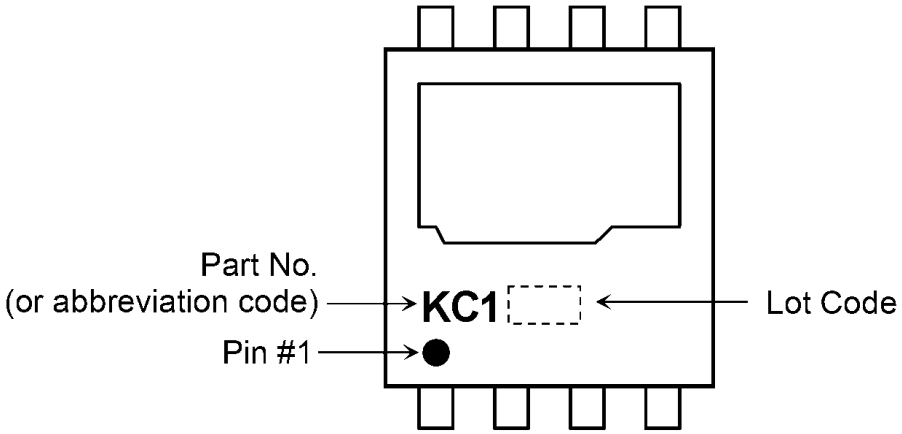

Fig. 7.1 Marking

Downloaded from Arrow.com.

8. Characteristics Curves (Note)

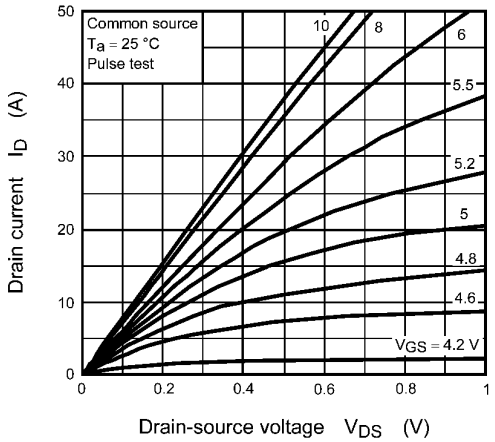

Fig. 8.1 I_D - V_{DS}

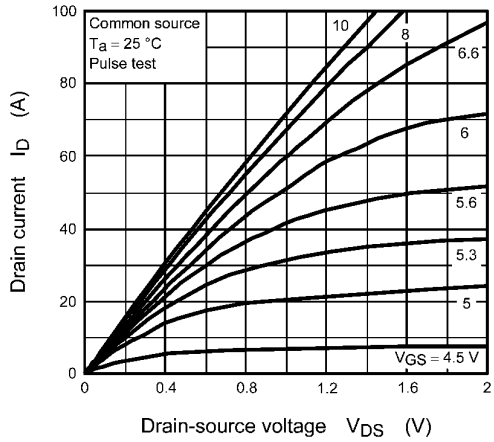

Fig. 8.2 I_D - V_{DS}

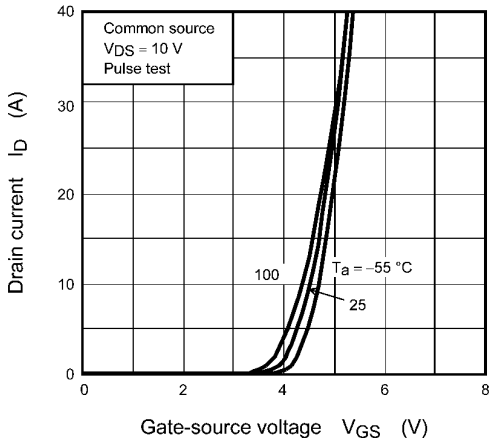

Fig. 8.3 I_D - V_{GS}

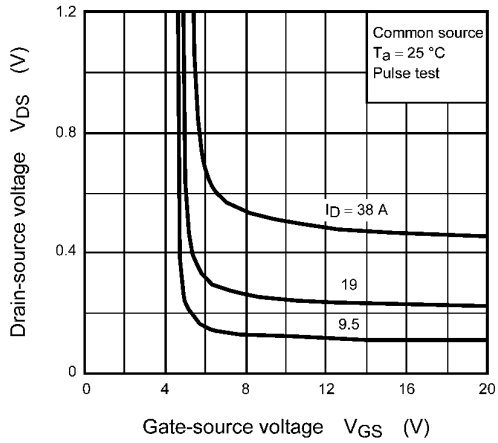

Fig. 8.4 V_{DS} - V_{GS}

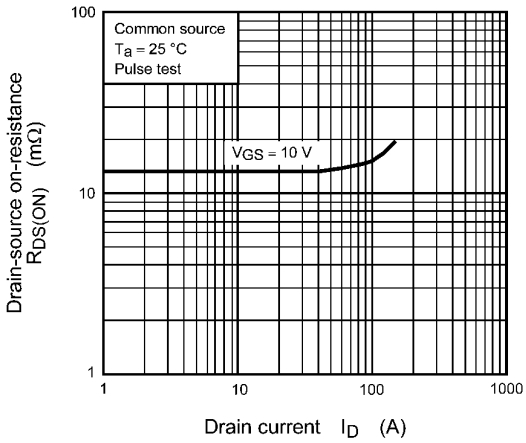

Fig. 8.5 $R_{DS(ON)}$ - I_D

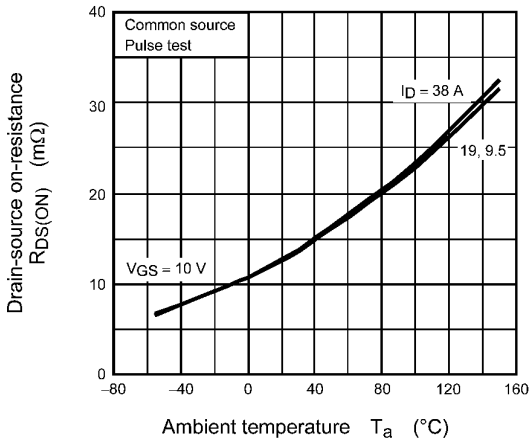

Fig. 8.6 $R_{DS(ON)}$ - T_a

Downloaded from Arrow.com.

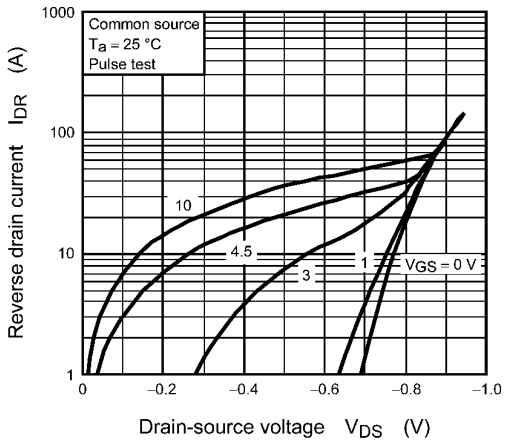

Fig. 8.7 I_{DR} - V_{DS}

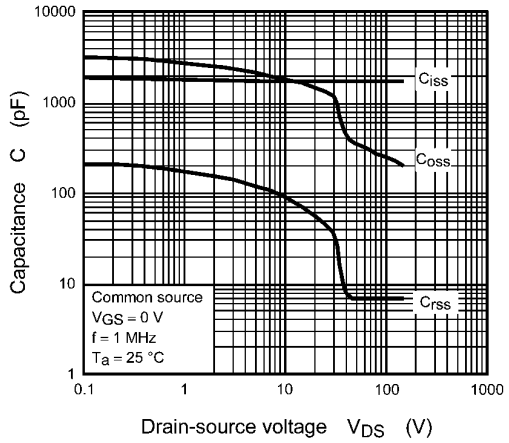

Fig. 8.8 Capacitance - V_{DS}

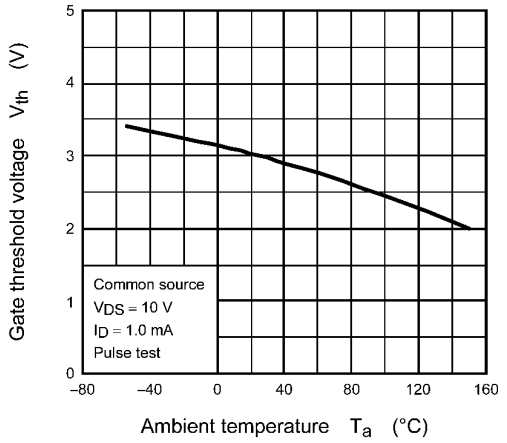

Fig. 8.9 V_{th} - T_a

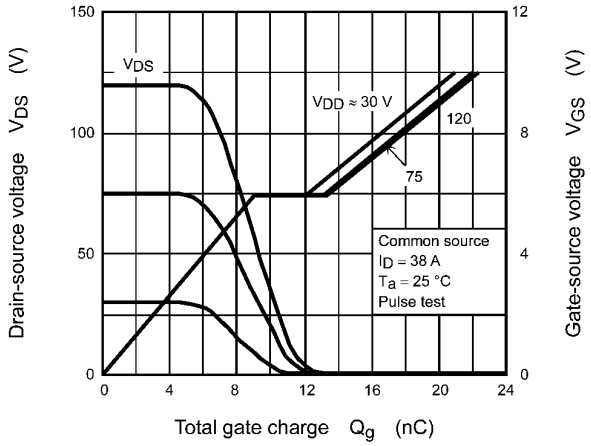

Fig. 8.10 Dynamic Input/Output Characteristics

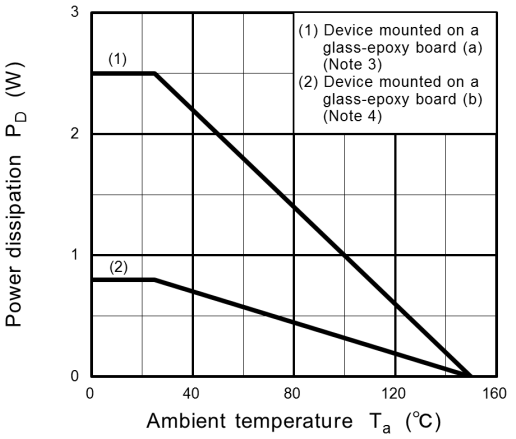

Fig. 8.11 P_D - T_a
(Guaranteed Maximum)

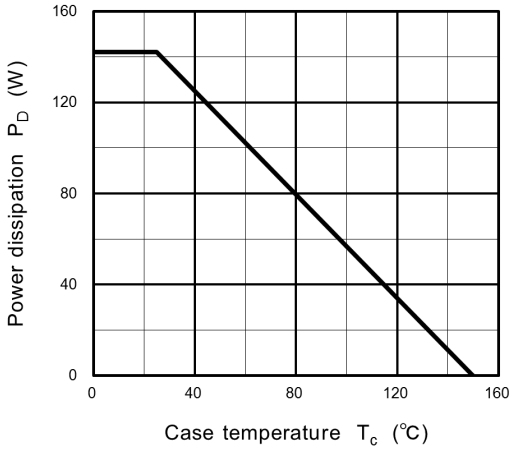

Fig. 8.12 P_D - T_c (Bottom drain)
(Guaranteed Maximum)

Downloaded from Arrow.com.

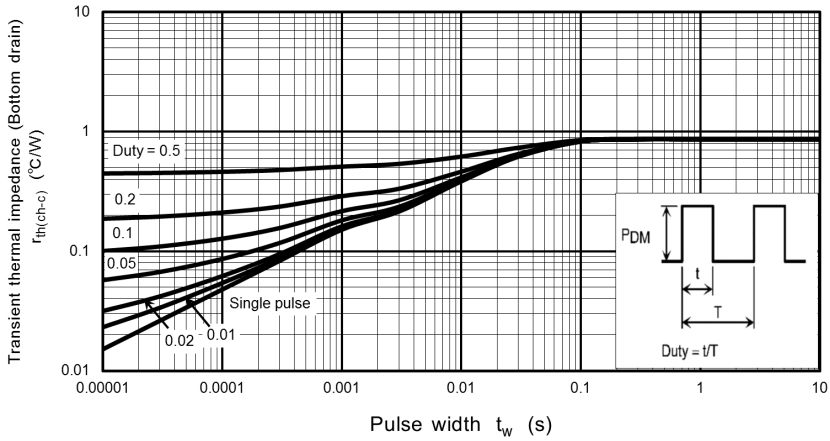

Fig. 8.13 r_{th} - t_w (Bottom drain) (Guaranteed Maximum)

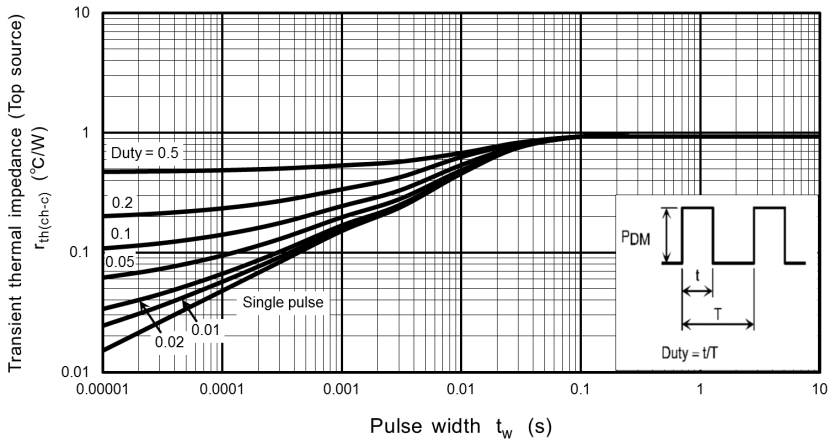

Fig. 8.14 r_{th} - t_w (Top source) (Guaranteed Maximum)

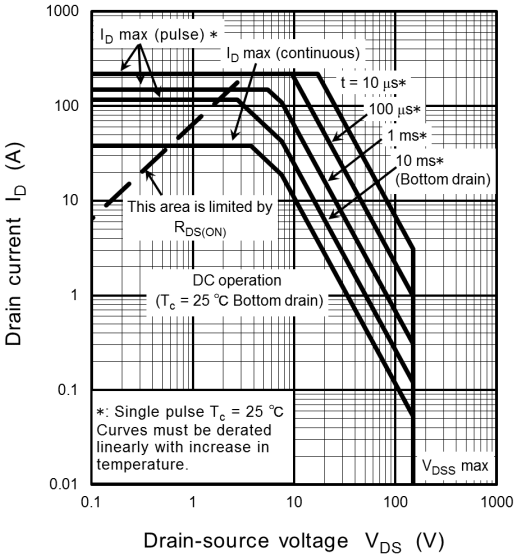

Fig. 8.15 Safe Operating Area (Guaranteed Maximum)

Downloaded from Arrow.com.

Note: The above characteristics curves are presented for reference only and not guaranteed by production test, unless otherwise noted.

Downloaded from Arrow.com.

Package Dimensions

Unit: mm

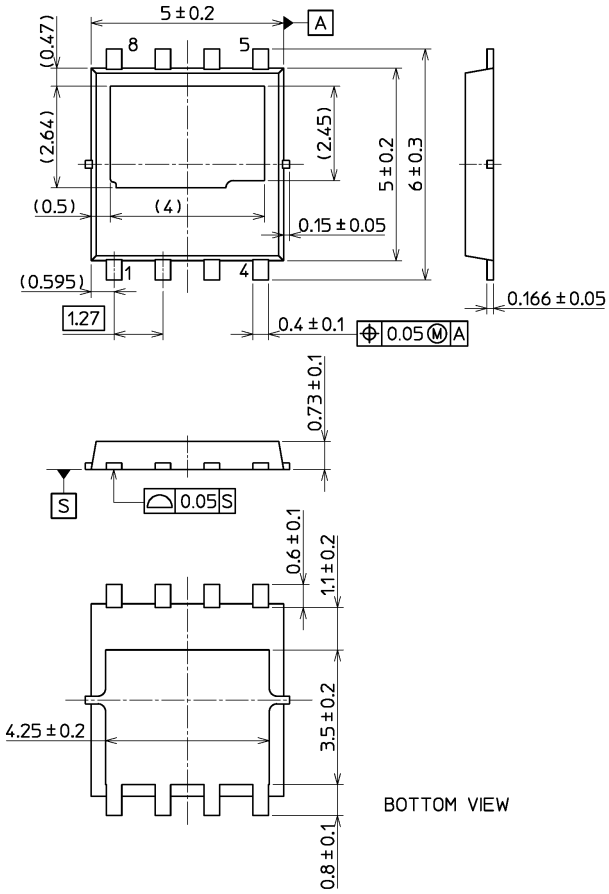

Weight: 0.104 g (typ.)

Package Name(s)
TOSHIBA: 2-5S1A
Nickname: DSOP Advance

Downloaded from Arrow.com.

RESTRICTIONS ON PRODUCT USE

Toshiba Corporation and its subsidiaries and affiliates are collectively referred to as "TOSHIBA".
Hardware, software and systems described in this document are collectively referred to as "Product".

- TOSHIBA reserves the right to make changes to the information in this document and related Product without notice.
- This document and any information herein may not be reproduced without prior written permission from TOSHIBA. Even with TOSHIBA's written permission, reproduction is permissible only if reproduction is without alteration/omission.
- Though TOSHIBA works continually to improve Product's quality and reliability, Product can malfunction or fail. Customers are responsible for complying with safety standards and for providing adequate designs and safeguards for their hardware, software and systems which minimize risk and avoid situations in which a malfunction or failure of Product could cause loss of human life, bodily injury or damage to property, including data loss or corruption. Before customers use the Product, create designs including the Product, or incorporate the Product into their own applications, customers must also refer to and comply with (a) the latest versions of all relevant TOSHIBA information, including without limitation, this document, the specifications, the data sheets and application notes for Product and the precautions and conditions set forth in the "TOSHIBA Semiconductor Reliability Handbook" and (b) the instructions for the application with which the Product will be used with or for. Customers are solely responsible for all aspects of their own product design or applications, including but not limited to (a) determining the appropriateness of the use of this Product in such design or applications; (b) evaluating and determining the applicability of any information contained in this document, or in charts, diagrams, programs, algorithms, sample application circuits, or any other referenced documents; and (c) validating all operating parameters for such designs and applications. **TOSHIBA ASSUMES NO LIABILITY FOR CUSTOMERS' PRODUCT DESIGN OR APPLICATIONS.**
- **PRODUCT IS NEITHER INTENDED NOR WARRANTED FOR USE IN EQUIPMENTS OR SYSTEMS THAT REQUIRE EXTRAORDINARILY HIGH LEVELS OF QUALITY AND/OR RELIABILITY, AND/OR A MALFUNCTION OR FAILURE OF WHICH MAY CAUSE LOSS OF HUMAN LIFE, BODILY INJURY, SERIOUS PROPERTY DAMAGE AND/OR SERIOUS PUBLIC IMPACT ("UNINTENDED USE").** Except for specific applications as expressly stated in this document, Unintended Use includes, without limitation, equipment used in nuclear facilities, equipment used in the aerospace industry, Class 3 medical devices, equipment used for automobiles, and military vehicles and munitions. **IF YOU USE PRODUCT FOR UNINTENDED USE, TOSHIBA ASSUMES NO LIABILITY FOR PRODUCT.** For details, please contact your TOSHIBA sales representative or contact us via our website.
- Do not disassemble, analyze, reverse-engineer, alter, modify, translate or copy Product, whether in whole or in part.
- Product shall not be used for or incorporated into any products or systems whose manufacture, use, or sale is prohibited under any applicable laws or regulations.
- The information contained herein is presented only as guidance for Product use. No responsibility is assumed by TOSHIBA for any infringement of patents or any other intellectual property rights of third parties that may result from the use of Product. No license to any intellectual property right is granted by this document, whether express or implied, by estoppel or otherwise.
- **ABSENT A WRITTEN SIGNED AGREEMENT, EXCEPT AS PROVIDED IN THE RELEVANT TERMS AND CONDITIONS OF SALE FOR PRODUCT, AND TO THE MAXIMUM EXTENT ALLOWABLE BY LAW, TOSHIBA (1) ASSUMES NO LIABILITY WHATSOEVER, INCLUDING WITHOUT LIMITATION, INDIRECT, CONSEQUENTIAL, SPECIAL, OR INCIDENTAL DAMAGES OR LOSS, INCLUDING WITHOUT LIMITATION, LOSS OF PROFITS, LOSS OF OPPORTUNITIES, BUSINESS INTERRUPTION AND LOSS OF DATA, AND (2) DISCLAIMS ANY AND ALL EXPRESS OR IMPLIED WARRANTIES AND CONDITIONS RELATED TO SALE, USE OF PRODUCT, OR INFORMATION, INCLUDING WARRANTIES OR CONDITIONS OF MERCHANTABILITY, FITNESS FOR A PARTICULAR PURPOSE, ACCURACY OF INFORMATION, OR NONINFRINGEMENT.**
- Do not use or otherwise make available Product or related software or technology for any military purposes, including without limitation, for the design, development, use, stockpiling or manufacturing of nuclear, chemical, or biological weapons or missile technology products (mass destruction weapons). Product and related software and technology may be controlled under the applicable export laws and regulations including, without limitation, the Japanese Foreign Exchange and Foreign Trade Law and the U.S. Export Administration Regulations. Export and re-export of Product or related software or technology are strictly prohibited except in compliance with all applicable export laws and regulations.
- Please contact your TOSHIBA sales representative for details as to environmental matters such as the RoHS compatibility of Product. Please use Product in compliance with all applicable laws and regulations that regulate the inclusion or use of controlled substances, including without limitation, the EU RoHS Directive. **TOSHIBA ASSUMES NO LIABILITY FOR DAMAGES OR LOSSES OCCURRING AS A RESULT OF NONCOMPLIANCE WITH APPLICABLE LAWS AND REGULATIONS.**

TOSHIBA ELECTRONIC DEVICES & STORAGE CORPORATION
https://toshiba.semicon-storage.com/

©2026
Toshiba Electronic Devices & Storage Corporation

Downloaded from Arrow.com.