100W Constant Power Mode LED Driver

XBG-100 series

User's Manual
Click Me

AC input with fixed cable

AC input with connector

LVLE SELV IP67 IS 15885(Part 2/Sec13) R-41027766 (Note 9) Type HL

Features

- Full power output at 70~100% constant current range operation
- Wide input range 90 ~ 305VAC with active PFC function
- Metal housing design with IP67
- Multiple dimming functions: 3 in 1(0-10V/PWM/Resistor)
- Dimming circuit with Isolated for latest safety regulation
- Surge protection with 6KV/4KV
- Typical lifetime>50000 hours and 5 years warranty
- AC input cable with connector for flexible installation

Applications

- LED bay lighting
- LED stage lighting
- LED spot lighting
- Explosion-proof lighting
- Type HL LED driver for class Ⅰ division 2.

GTIN CODE

MW Search: https://www.meanwell.com/serviceGTIN.aspx

Description

XBG-100 series is a 100W AC/DC LED driver featuring the constant power mode. XBG-100 operates from 90~305VAC and offers with different rated current ranging between 1750mA and 2780mA. Thanks to the high efficiency up to 92%, with the fanless design, the entire series is able to operate for -40℃~+85℃ case temperature under free air convection. The design of metal housing and IP67 ingress protection level allows this series to fit both indoor and outdoor applications. Moreover the innovative environment-adaptive capability allows this series to reliably light on the LEDs for all kinds of application environments. XBG-100 series comply with the latest version of IEC61347/IEC60598-1 and UL8750 international safety regulations.The output and dimming circuit are also completely in accordance with the new regulations with isolation to ensure the safety of both users and luminaire system during installation.

Model Encoding

XBG - 100 - □ - □

- AC-cable option: { C:AC input with connector / Blank:AC input with fixed cable
- Function options
- Rated wattage
- Series name

Type	IP Level	Function	Note
A	IP67	constant power adjustable via built-in potentiometer	In Stock
AB	IP67	constant power adjustable via built-in potentiometer + 3 in 1 dimming function (0~10Vdc, 10V PWM signal and resistor)	In Stock

Downloaded from Arrow.com.

SPECIFICATION

MODEL		XBG-100-□-□
OUTPUT	DEFAULT CURRENT	2100mA
	RATED POWER	100W
	CONSTANT CURRBS EN/ENT REGION	27 ~ 56V
	FULL POWER CURRENT RANGE	1750~2780mA
	OPEN CIRCUIT VOLTAGE (max.)	60V
	CURRENT ADJ. RANGE	875~2780mA
	CURRENT RIPPLE	3.0% max. @rated current
	CURRENT TOLERANCE	±5%
	SET UP TIME Note.4	500ms/230VAC, 1200ms/115VAC
INPUT	VOLTAGE RANGE Note.2	90 ~ 305VAC 127 ~ 431VDC (Please refer to "STATIC CHARACTERISTIC" section)
	FREQUENCY RANGE	47 ~ 63Hz
	POWER FACTOR (Typ.)	PF≧0.97 / 115VAC, PF≧0.95 / 230VAC, PF≧0.92 / 277VAC at full load (Please refer to "Power Factor Characteristic" section)
	TOTAL HARMONIC DISTORTION	THD< 10% (@ load≧50% at 115VAC/230VAC ,@load≧75% at 277VAC) Please refer to "TOTAL HARMONIC DISTORTION (THD)" section
	EFFICIENCY (Typ.)	92%
	AC CURRENT (Typ.)	1.1A / 115VAC 0.5A / 230VAC 0.42A / 277VAC
	INRUSH CURRENT(Typ.)	COLD START 50A(twidth=400μs measured at 50% Ipeak) at 230VAC; Per NEMA 410
	MAX. NO. of PSUs on 16A CIRCUIT BREAKER	8 unit(circuit breaker of type B) / 14 units(circuit breaker of type C) at 230VAC
	LEAKAGE CURRENT	<0.75mA / 277VAC
	STANDBY POWER CONSUMPTION	Standby power consumption<0.5W for AB-Type
PROTECTION	OVER POWER	105-150%
		Hiccup mode, recovers automatically after fault condition is removed
	SHORT CIRCUIT	Constant current limiting or Hiccup mode, recovers automatically after fault condition is removed
	OVER VOLTAGE	61 ~ 78V
		Shut down output voltage, re-power on after fault condition is removed to recover
	OVER TEMPERATURE	Shut down output voltage, re-power on after fault condition is removed to recover
ENVIRONMENT	WORKING TEMP.	Tcase=-40 ~ +85℃(Please refer to "OUTPUT LOAD vs TEMPERATURE" section)
	MAX. CASE TEMP.	Tcase=+85℃
	WORKING HUMIDITY	20 ~ 95% RH non-condensing
	STORAGE TEMP., HUMIDITY	-40 ~ +80℃, 10 ~ 95% RH non-condensing
	TEMP. COEFFICIENT	±0.03%/℃ (0 ~ 60℃)
	VIBRATION	10 ~ 500Hz, 5G 12min./1cycle, period for 72min. each along X, Y, Z axes
SAFETY & EMC	SAFETY STANDARDS	UL8750(type"HL"), CSA C22.2 No. 250.13-12; ENEC BS EN/EN61347-1, BS EN/EN61347-2-13 independent, BS EN/EN62384; IS15885(Part2/Sec13); GB/T19510.1,GB/T19510.213; IP67;EAC TP TC 004 approved
	WITHSTAND VOLTAGE	I/P-O/P:3.75KVAC I/P-PE:2KVAC O/P-PE:1.5KVAC
	ISOLATION RESISTANCE	I/P-O/P, I/P-PE, O/P-PE:100M Ohms / 500VDC / 25℃/ 70% RH
	EMC EMISSION	**Parameter** / **Standard** / **Test Level/Note**
		Conducted / BS EN/EN55015(CISPR15),GB/T 17743 / -----
		Radiated / BS EN/EN55015(CISPR15),GB/T 17743 / -----
		Harmonic Current / BS EN/EN61000-3-2,GB17625.1 / Class C @load≥50%
		Voltage Flicker / BS EN/EN61000-3-3 / -----
	EMC IMMUNITY	BS EN/EN61547
		Parameter / **Standard** / **Test Level/Note**
		ESD / BS EN/EN61000-4-2 / Level 3, 8KV air ; Level 2, 4KV contact
		Radiated / BS EN/EN61000-4-3 / Level 3
		EFT/Burst / BS EN/EN61000-4-4 / Level 3
		Surge / BS EN/EN61000-4-5 / 4KV/Line-Line 6KV/Line-Earth
		Conducted / BS EN/EN61000-4-6 / Level 3
		Magnetic Field / BS EN/EN61000-4-8 / Level 4
		Voltage Dips and Interruptions / BS EN/EN61000-4-11 / >95% dip 0.5 periods, 30% dip 25 periods, >95% interruptions 250 periods
OTHERS	MTBF	2871.3K hrs min. Telcordia SR-332(Bellcore) ;188.8K hrs min. MIL-HDBK-217F (25℃)
	LIFETIME Note.5	50000 hrs min.
	DIMENSION	φ130mm *56mm(D*H)
	PACKING	0.8Kg; 16pcs/ 14.8Kg/1.57CUFT

NOTE

1. All parameters NOT specially mentioned are measured at 230VAC input, rated current and 25℃ of ambient temperature.
2. De-rating may be needed under low input voltages. Please refer to "STATIC CHARACTERISTIC" sections for details.
3. The driver is considered as a component that will be operated in combination with final equipment. Since EMC performance will be affected by the complete installation, the final equipment manufacturers must re-qualify EMC Directive on the complete installation again. (as available on https://www.meanwell.com//Upload/PDF/EMI_statement_en.pdf)
4. Length of set up time is measured at first cold start. Turning ON/OFF the power supply may lead to increase of the set up time.
5. This series meets the typical life expectancy of >50,000 hours of operation when Tcase, particularly tc point (or TMP, per DLC), is about 75℃ or less.
6. To fulfill requirements of the latest ErP regulation for lighting fixture, this LED drive can only be used behind a switch without permanently connected to the mains.
7. Please refer to the warranty statement on MEAN WELL's website at http://www.meanwell.com
8. The ambient temperature derating of 3.5℃/1000m with fanless models and of 5℃/1000m with fan models for operating altitude higher than 2000m(6500ft).
9. Products sourced from the Americas regions may not have the PSE/CCC/BIS/KC logo. Please contact your MEAN WELL sales for more information.
10. For any application note and IP water proof function installation caution, please refer our user manual before using. https://www.meanwell.com/Upload/PDF/LED_EN.pdf
11. For A/AB type need to consider build-in using or filling the Io adjusting hole with the potting compound to comply with Type HL application.

※ Product Liability Disclaimer：For detailed information, please refer to https://www.meanwell.com/serviceDisclaimer.aspx

Downloaded from Arrow.com.

■ BLOCK DIAGRAM

PFC fosc : 45~50KHz
PWM fosc : 60~130KHz

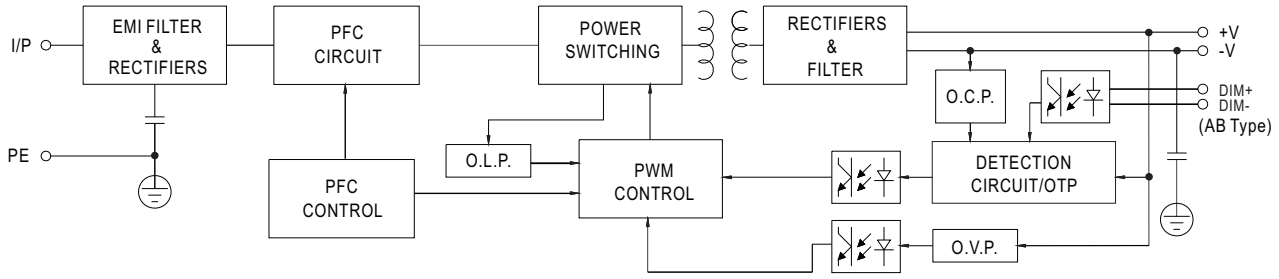

■ DRIVING METHODS OF LED MODULE

※ I-V Operating Area

◎ **XBG-100**

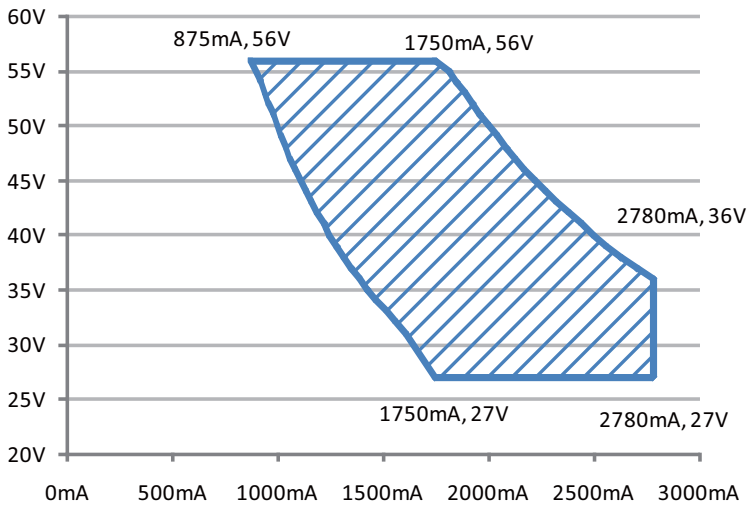

Downloaded from Arrow.com.

■ DIMMING OPERATION

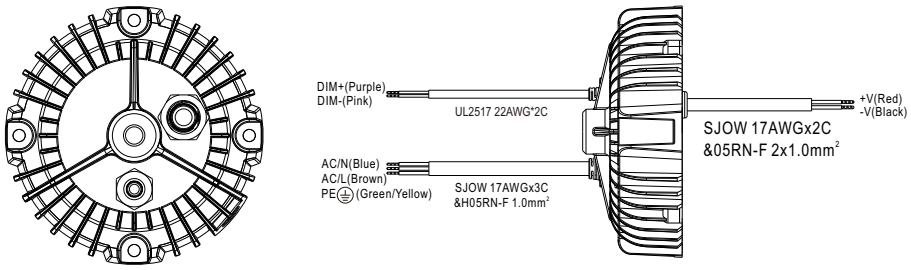

※ **3 in 1 dimming function (for AB-Type)**

- Output constant current level can be adjusted by applying one of the three methodologies between DIM+ and DIM-: 0 ~ 10VDC, or 10V PWM signal or resistance.
- Direct connecting to LEDs is suggested. It is not suitable to be used with additional drivers.
- Dimming source current from power supply: 100μA (typ.)

◎ Applying additive 0 ~ 10VDC

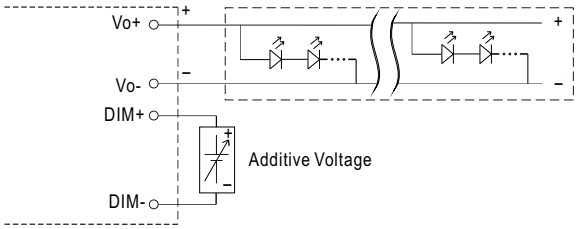

"DO NOT connect "DIM- to Vo-"

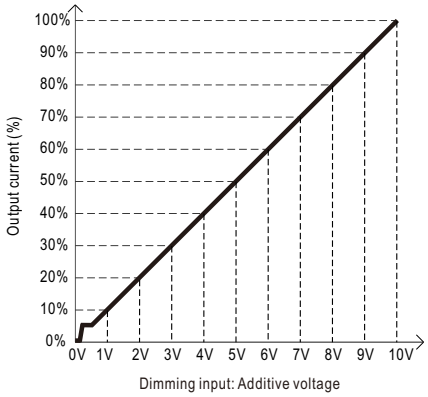

◎ Applying additive 10V PWM signal (frequency range 100Hz ~ 3KHz):

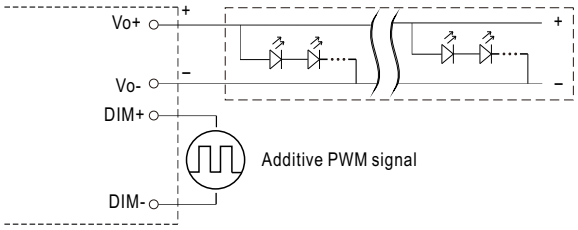

"DO NOT connect "DIM- to Vo-"

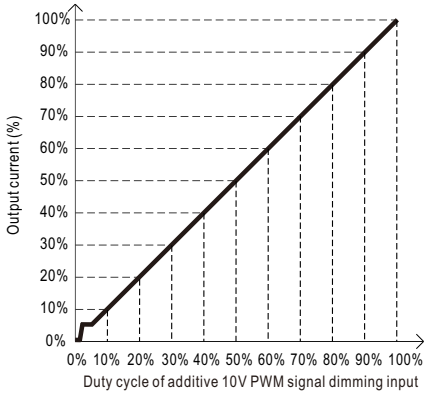

◎ Applying additive resistance:

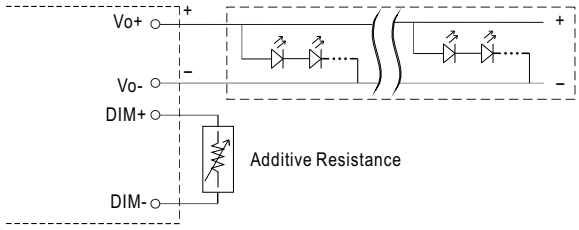

"DO NOT connect "DIM- to Vo-"

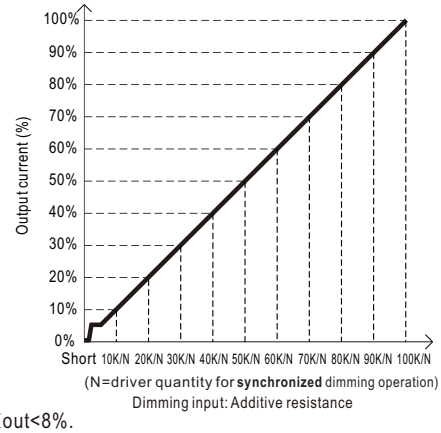

Note : 1. Min. dimming level is about 8% and the output current is not defined when 0%< Iout<8%.
2. The output current could drop down to 0% when dimming input is about 0Ω or 0Vdc, or 10V PWM signal with 0% duty cycle.

Downloaded from Arrow.com.

■ OUTPUT LOAD vs TEMPERATURE

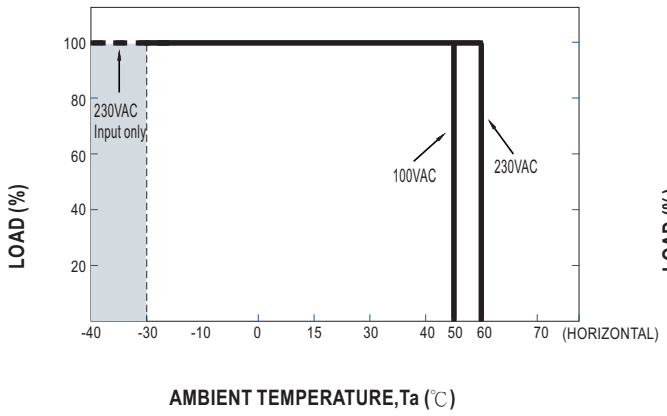

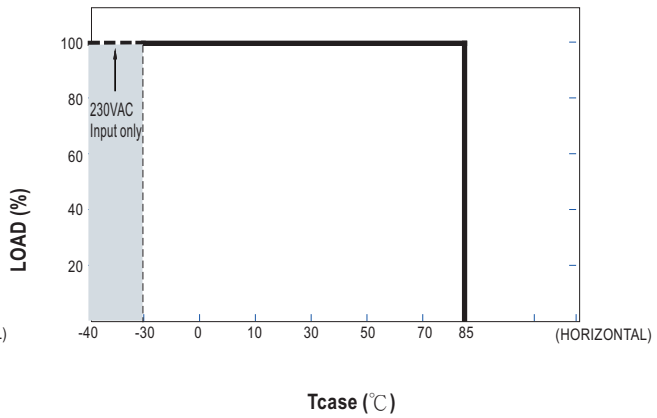

■ STATIC CHARACTERISTIC

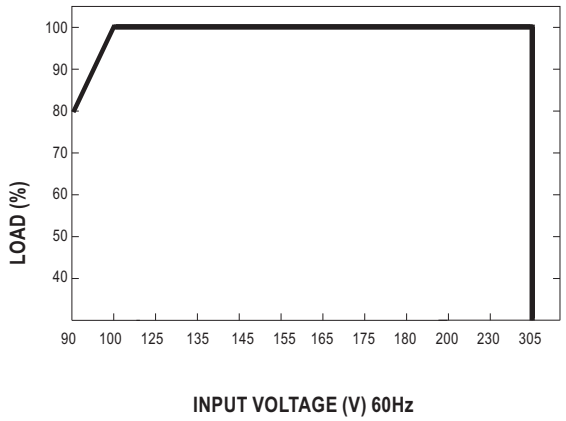

■ POWER FACTOR (PF) CHARACTERISTIC

※ Tcase at 65℃

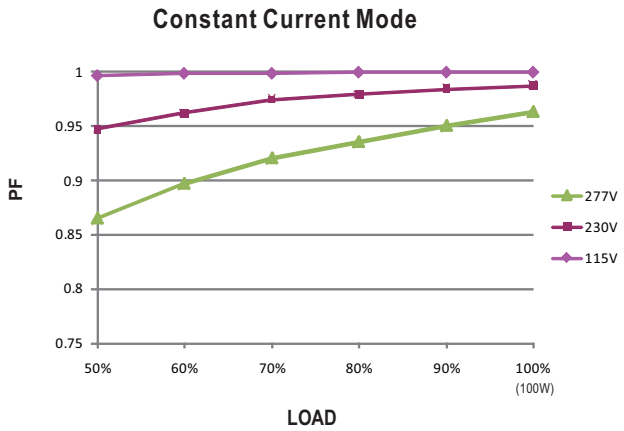

■ TOTAL HARMONIC DISTORTION (THD)

※ 1750mA Model, Tcase at 65℃

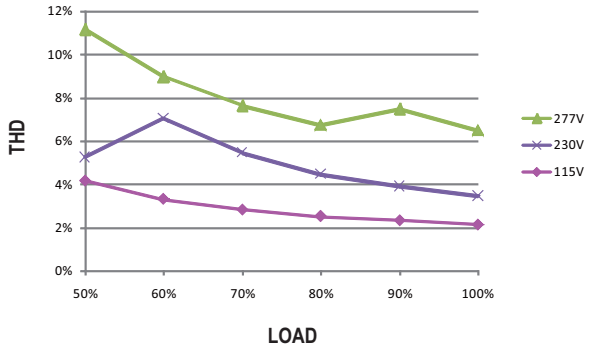

■ EFFICIENCY vs LOAD

XBG-100 series possess superior working efficiency that up to 92% can be reached in field applications.

※ 1750mA Model, Tcase at 65℃

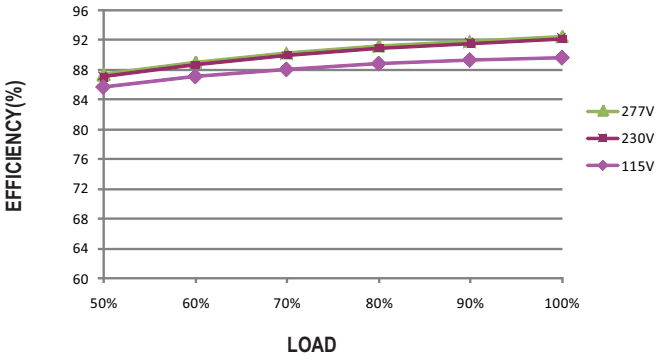

Downloaded from Arrow.com.

LIFE TIME

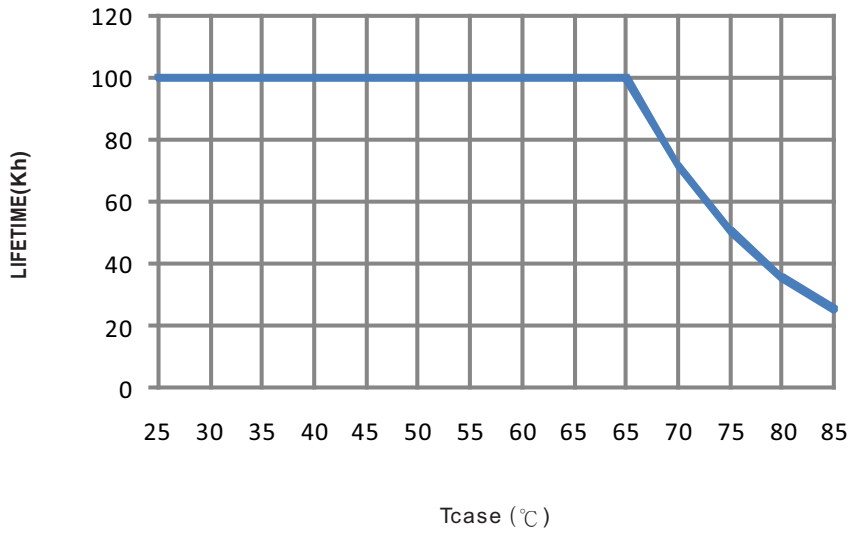

INSTALLATIONS

Hanger	**Chain**	**High Bay Light**

Caution

- Please inspect the appearance of the driver if the package is damaged. There should not be any cracks.
- Please do not drop or bump the driver.
- All screws including the suspension screw should be paired with a spring washer and locked tight.
- The entire luminaire, including the driver, should be limited to 10Kg or less.
- The luminaire should be cautiously protected from damage due to shock throughout packaging and transportation.
- Please thoroughly follow the preceding cautionary notes to prevent the luminaire from falling, leading to injuries.

Downloaded from Arrow.com.

■ MECHANICAL SPECIFICATION

Case No.280 Unit:mm Tolerance:±1

※ **A-Type(AC Cable with fixed cable)**

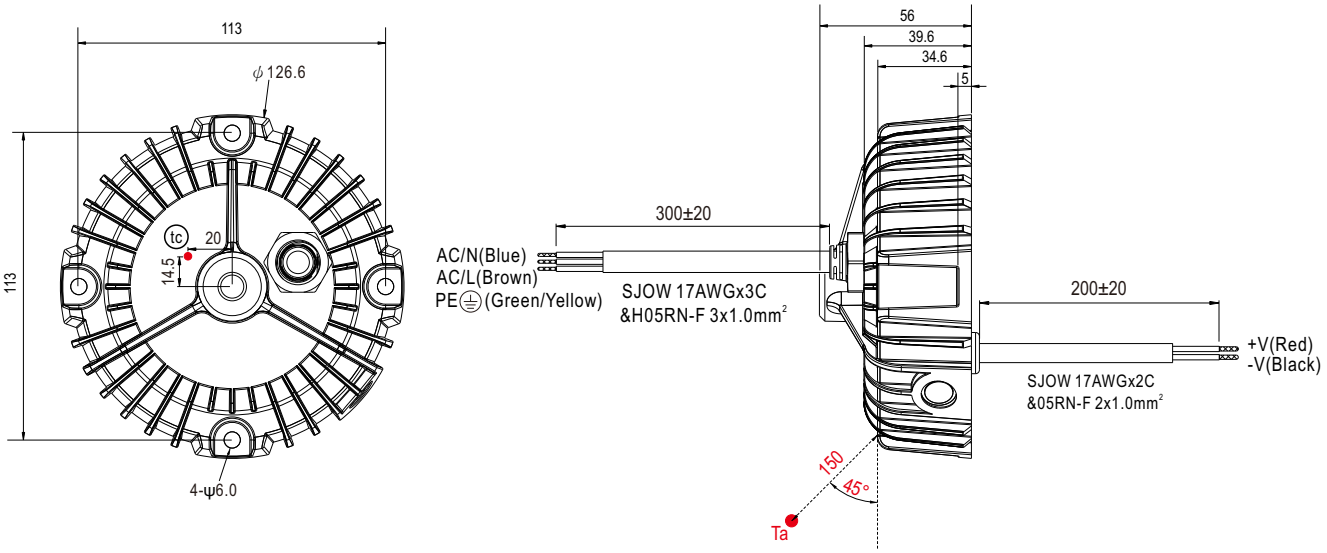

※ **AB-Type(AC Cable with fixed cable)**

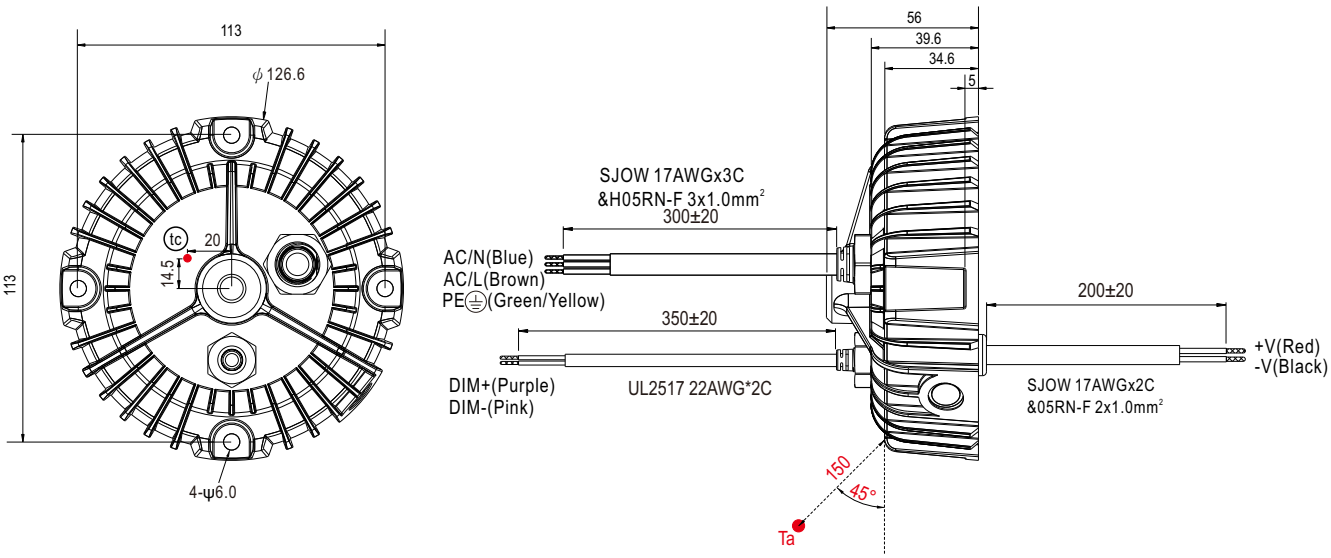

- ⓣⓒ : Max. Case Temperature.(case temperature measured point)
- Ta: Ambient Temperature measured point

Downloaded from Arrow.com.

※ **A-C-Type(AC cable with connector)**

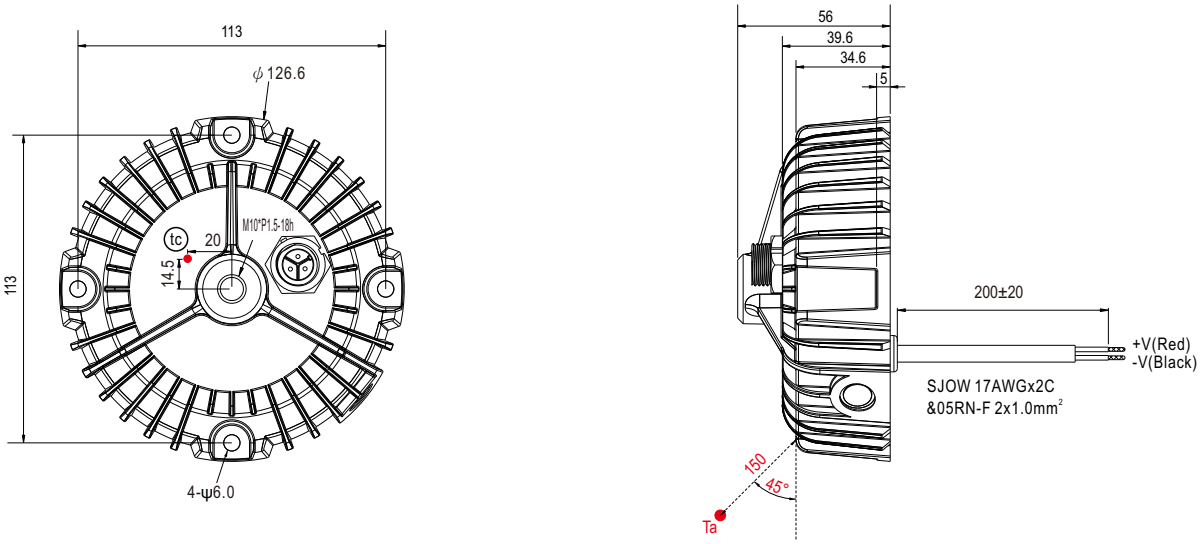

※ **AB-C-Type(AC cable with connector)**

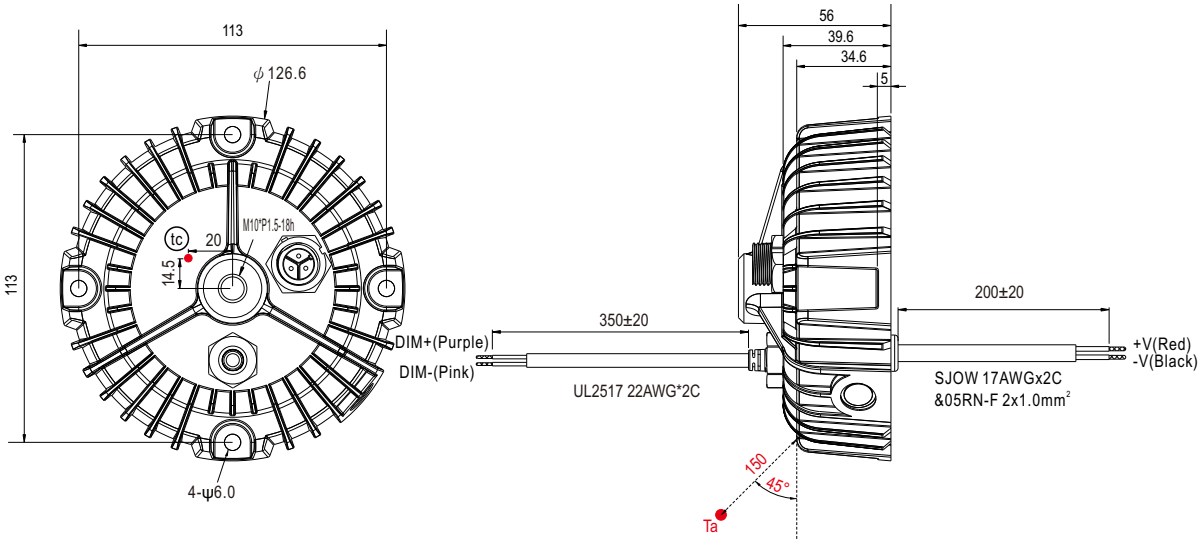

Terminal Pin No. Assignment(CHOGORI 22003515-01)

Pin No.	Assignment	Drawing
1	AC/L	
2	AC/N	
3	PE⏚	

- (tc) : Max. Case Temperature.(case temperature measured point)
- Ta: Ambient Temperature measured point

AC input cable is optional, needs extra charge

Item	Order Code	Note
100cm	F61-XBG-AC-CABLE-100	In Stock
200cm	F61-XBG-AC-CABLE-200	By Request
300cm	F61-XBG-AC-CABLE-300	By Request

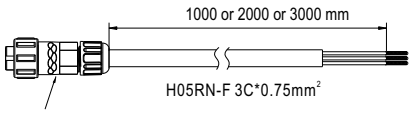

CHOGORI 22003211-01

■ INSTALLATION MANUAL

Please refer to : http://www.meanwell.com/manual.html

Downloaded from Arrow.com.