SERIES: VGS-75B | **DESCRIPTION:** AC-DC POWER SUPPLY

FEATURES

- +70°C operation
- output trim
- current/voltage/temperature protections
- screw terminal interface
- low standby power consumption
- 30 mm height

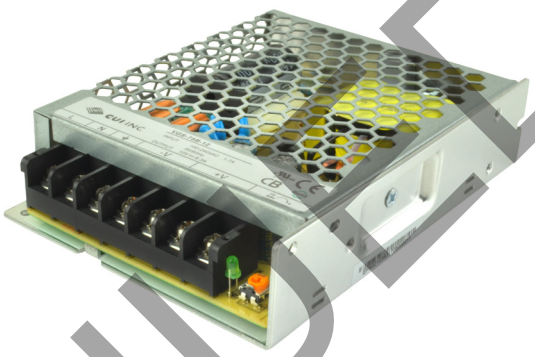

MODEL	output voltage (Vdc)	output current max (A)	output power max (W)	ripple and noise[1] max (mVp-p)	efficiency[2] typ (%)
VGS-75B-12	12	6.3	75.6	100	85
VGS-75B-24	24	3.2	76.8	150	88
VGS-75B-30	30	2.5	75	150	88
VGS-75B-48	48	1.6	76.8	200	88

Notes:
1. 20 MHz bandwidth oscilloscope, 12" of twisted load cables paralleled with 0.1 µF ceramic and 47 µF electrolytic capacitors placed across the terminals at the load.
2. At 230 Vac, 50 Hz, full load.
3. All specifications are measured at Ta=25°C, nominal input voltage, and rated output load unless otherwise specified.

PART NUMBER KEY

VGS-75B - **XX**

Base Number — Output Voltage

DISCONTINUED

Please read our datasheet & drawing disclaimer here.

Downloaded from Arrow.com.

INPUT

parameter	conditions/description	min	typ	max	units
voltage		90		264	Vac
frequency		47		63	Hz
current	at 115 Vac input, full load at 230 Vac input, full load			1.7 1.0	A A
inrush current	at 230 Vac input, cold start, full load			50	A
leakage current				3.5	mA
no load power consumption	at 230 Vac			0.4	W

OUTPUT

parameter	conditions/description	min	typ	max	units
line regulation	12 Vdc output model all other models			±1 ±0.5	% %
load regulation	12 Vdc output model all other models			±1 ±0.5	% %
adjustability	built in trim pot		±10		%
start-up time	at 115/230 Vac input, full load			2	s
rise time	at 115/230 Vac input, full load			40	ms
hold-up time	at 115 Vac input, full load at 230 Vac input, full load	12 30			ms ms
switching frequency			65		kHz

PROTECTIONS

parameter	conditions/description	min	typ	max	units
over voltage protection	output shutdown, must recycle power to recover	120		145	%
over current protection	output shutdown, auto recovery	110		150	%
short circuit protection	output shutdown, auto recovery				

SAFETY & COMPLIANCE

parameter	conditions/description	min	typ	max	units
isolation voltage	input to output for 1 minute, 10 mA input to ground for 1 minute, 10 mA output to ground for 1 minute, 10 mA		1,500 1,500 500		Vac Vac Vac
isolation resistance	input to output at 500 Vdc input to ground at 500 Vdc output to ground 500 Vdc	100 100 100			MΩ MΩ MΩ
safety approvals	certified to 62368: EN certified to 60950: IEC/UL				
safety class	class I				
conducted emissions	EN 55032:2015, Class B				
radiated emissions	EN 55032:2015, Class B				
input current harmonics	EN 61000-3-2:2014, Class A				
voltage fluctuation and flicker	EN 61000-3-3:2013, Class A				
ESD immunity	IEC 61000-4-2, air: ±8 kV; contact: ±4 kV, Class A				
radiated field immunity	IEC 61000-4-3, 3 V/m, Class A				
electrical fast transient immunity	IEC 61000-4-4, Ac power port: 1 kV; signal & telecommunication ports: 0.5 kV, Class B				

Notes: 1. The power supply is considered a component which will be installed into final equipment. The final equipment still must be tested to meet the necessary EMC directives.

DISCONTINUED

Downloaded from Arrow.com.

SAFETY & COMPLIANCE (CONTINUED)

parameter	conditions/description	min	typ	max	units
surge immunity	IEC 61000-4-5, input L to input N: 1 kV; input L to FG: 2 kV; input N to FG: 2 kV, Class C				
conducted immunity	IEC 61000-4-6, frequency range: 0.15~80 MHz; field strength: 3 Vms, Class A				
magnetic field immunity	IEC 61000-4-8, 1 A/m, Class A				
voltage dips, interruptions	IEC 61000-4-11: voltage dips >95% reduction, 0.5 period, Class A voltage dips 30% reduction, 25 period, Class B voltage dips >95% reduction, 250 period, Class C				
MTBF	as per MIL-HDBK-217F, 25°C		200,000		hours
RoHS	yes				

Notes: 1. The power supply is considered a component which will be installed into final equipment. The final equipment still must be tested to meet the necessary EMC directives.

ENVIRONMENTAL

parameter	conditions/description	min	typ	max	units
operating temperature	see derating curves	-20		70	°C
storage temperature		-40		85	°C
operating humidity	non-condensing	20		90	%
storage humidity	non-condensing	10		95	%

DERATING CURVES

Output Load vs. Input Voltage
(at 25°C, Natural Convection)

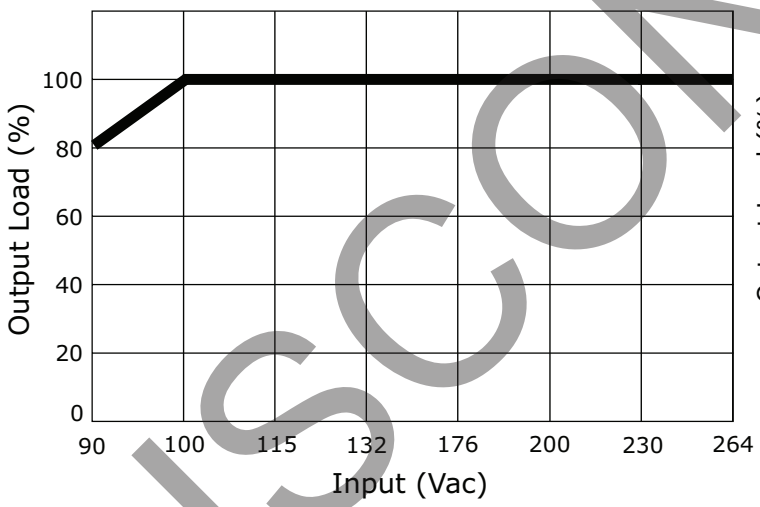

Output Load vs. Ambient Temperature
(Natural Convection)

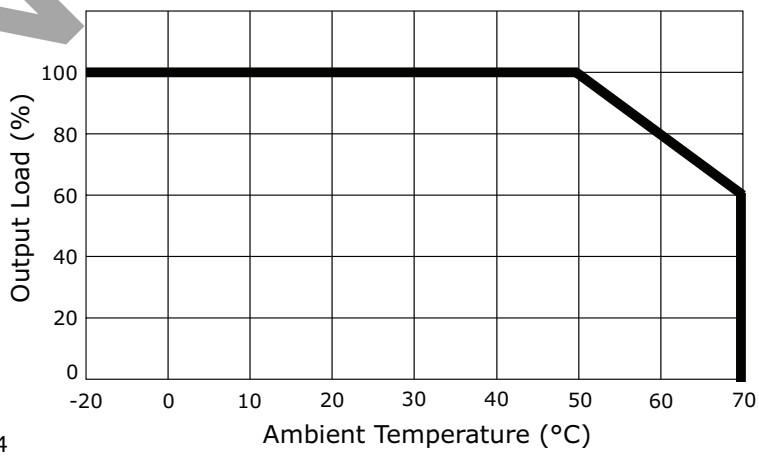

DISCONTINUED

Downloaded from Arrow.com.

MECHANICAL

parameter	conditions/description	min	typ	max	units
dimensions	129 x 97.5 x 30				mm
weight			300		g
cooling	natural convection				
input/output connector	screw terminals accept 22~12 AWG wire, 1.2 N-m torque				

MECHANICAL DRAWING

units: mm
tolerance: ±0.3 mm

Input/Output Connector	
PIN	Function
1	AC(L)
2	AC(N)
3	FG
4	-V
5	-V
6	+V
7	+V

MOUNTING SCREWS		
Screw Size	Max Depth	Torque
M3X0.5	4 mm	<0.75 N-m
M4X0.7	4 mm	<0.8 N-m
MOUNTING ORIENTATION		

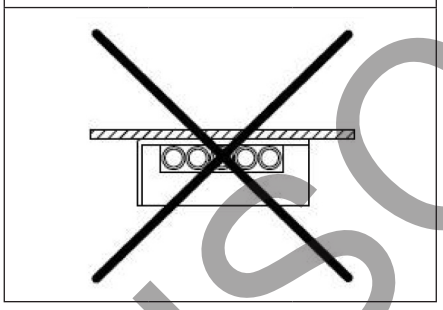

Note: 1. Parts should not be mounted in an upside down orientation.

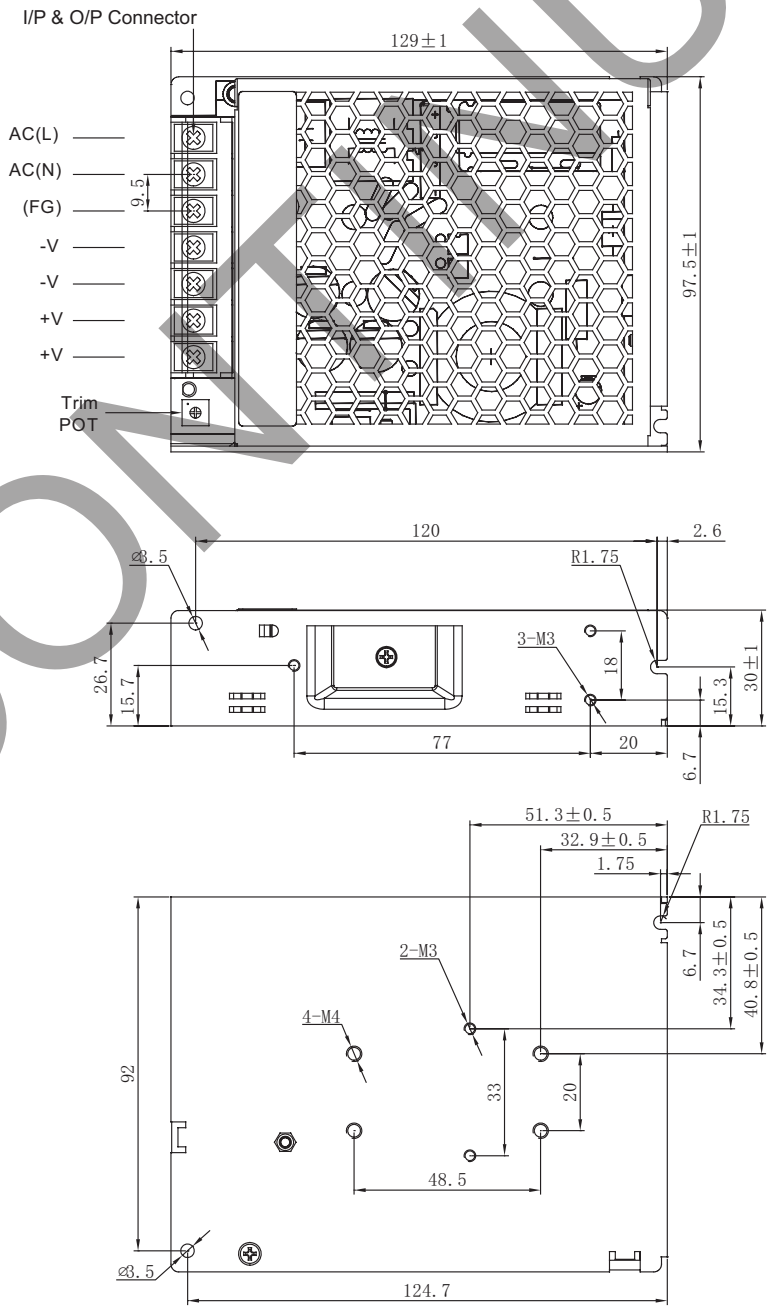

DISCONTINUED

Downloaded from Arrow.com.

REVISION HISTORY

rev.	description	date
1.0	initial release	06/20/2018
1.01	company logo updated	12/22/2020
1.02	safeties updated	01/25/2021

The revision history provided is for informational purposes only and is believed to be accurate.

DISCONTINUED

CUI INC
a bel group

Headquarters
20050 SW 112th Ave.
Tualatin, OR 97062
800.275.4899

Fax 503.612.2383
cui.com
techsupport@cui.com

CUI offers a two (2) year limited warranty. Complete warranty information is listed on our website.

CUI reserves the right to make changes to the product at any time without notice. Information provided by CUI is believed to be accurate and reliable. However, no responsibility is assumed by CUI for its use, nor for any infringements of patents or other rights of third parties which may result from its use.

CUI products are not authorized or warranted for use as critical components in equipment that requires an extremely high level of reliability. A critical component is any component of a life support device or system whose failure to perform can be reasonably expected to cause the failure of the life support device or system, or to affect its safety or effectiveness.

Downloaded from Arrow.com.