General purpose (dual transistors)

IMX8

Not Recommended for New Designs

●Features
1) Two 2SC3906K chips in an SMT package.
2) High breakdown voltage.

●External dimensions (Unit : mm)

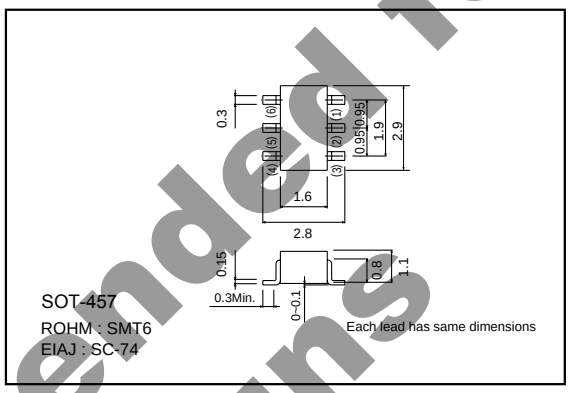

●Package, marking, and packaging specifications

Part No.	IMX8
Package	SMT6
Marking	X8
Code	T108
Basic ordering unit (pieces)	3000

●Equivalent circuit

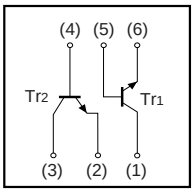

●Absolute maximum ratings (Ta=25°C)

Parameter	Symbol	Limits	Unit
Collector-base voltage	V_{CBO}	120	V
Collector-emitter voltage	V_{CEO}	120	V
Emitter-base voltage	V_{EBO}	5	V
Collector current	I_C	50	mA
Power dissipation	Pc	300(TOTAL)	mW ＊
Junction temperature	Tj	150	°C
Storage temperature	Tstg	–55 to +150	°C

＊ 200mW per element must not be exceeded.

●Electrical characteristics (Ta=25°C)

Parameter	Symbol	Min.	Typ.	Max.	Unit	Conditions
Collector-base breakdown voltage	BV_{CBO}	120	–	–	V	I_C=50μA
Collector-emitter breakdown voltage	BV_{CEO}	120	–	–	V	I_C=1mA
Emitter-base breakdown voltage	BV_{EBO}	5	–	–	V	I_E=50μA
Collector cutoff current	I_{CBO}	–	–	0.5	μA	V_{CB}=100V
Emitter cutoff current	I_{EBO}	–	–	0.5	μA	V_{EB}=4V
DC current transfer ratio	h_{FE}	180	–	820	–	V_{CE}=6V, I_C=2mA
Transition frequency	f_T	–	140	–	MHz	V_{CE}=12V, I_E= –2mA, f=100MHz ＊
Collector-emitter saturation voltage	$V_{CE(sat)}$	–	–	0.5	V	I_C/I_B=10mA/1mA

＊Transition frequency of the device

Downloaded from Arrow.com.

●Electrical characteristics

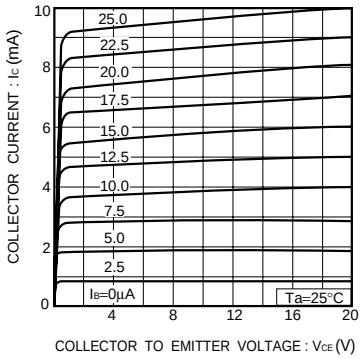

Fig.1 Ground emitter output characteristics

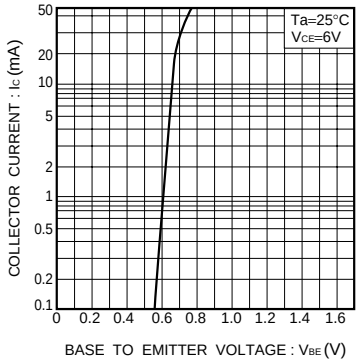

Fig.2 Ground emitter propagation characteristics

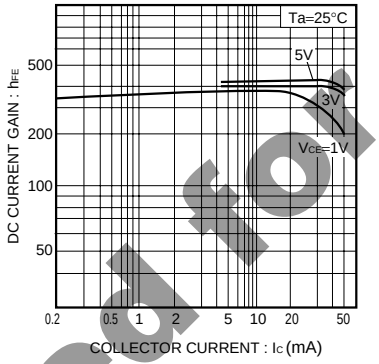

Fig.3 DC current gain vs. collector current

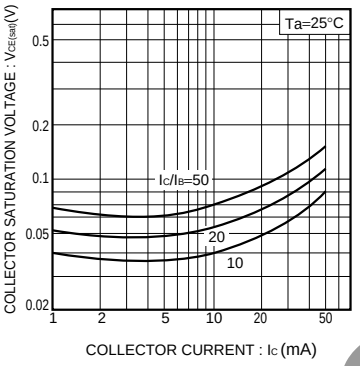

Fig.4 Collector-emitter saturation voltage vs. collector current (I)

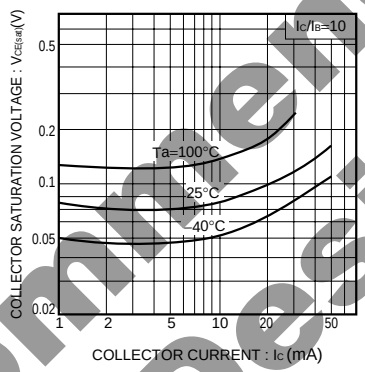

Fig.5 Collector-emitter saturation voltage vs. collector current (II)

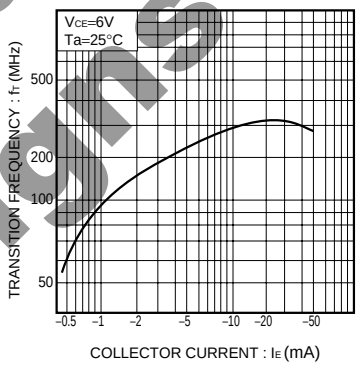

Fig.6 Gain bandwidth product vs. emitter current

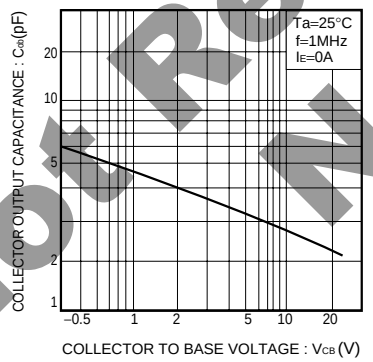

Fig.7 Collector output capacitance vs. collector-base voltage

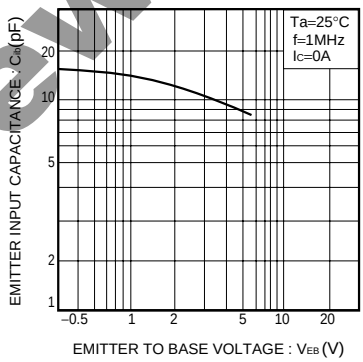

Fig.8 Emitter input capacitance vs. emitter-base voltage

Not Recommended for New Designs

Downloaded from Arrow.com.

Notes

- No technical content pages of this document may be reproduced in any form or transmitted by any means without prior permission of ROHM CO.,LTD.
- The contents described herein are subject to change without notice. The specifications for the product described in this document are for reference only. Upon actual use, therefore, please request that specifications to be separately delivered.
- Application circuit diagrams and circuit constants contained herein are shown as examples of standard use and operation. Please pay careful attention to the peripheral conditions when designing circuits and deciding upon circuit constants in the set.
- Any data, including, but not limited to application circuit diagrams information, described herein are intended only as illustrations of such devices and not as the specifications for such devices. ROHM CO.,LTD. disclaims any warranty that any use of such devices shall be free from infringement of any third party's intellectual property rights or other proprietary rights, and further, assumes no liability of whatsoever nature in the event of any such infringement, or arising from or connected with or related to the use of such devices.
- Upon the sale of any such devices, other than for buyer's right to use such devices itself, resell or otherwise dispose of the same, no express or implied right or license to practice or commercially exploit any intellectual property rights or other proprietary rights owned or controlled by
- ROHM CO., LTD. is granted to any such buyer.
- Products listed in this document are no antiradiation design.

The products listed in this document are designed to be used with ordinary electronic equipment or devices (such as audio visual equipment, office-automation equipment, communications devices, electrical appliances and electronic toys).
Should you intend to use these products with equipment or devices which require an extremely high level of reliability and the malfunction of with would directly endanger human life (such as medical instruments, transportation equipment, aerospace machinery, nuclear-reactor controllers, fuel controllers and other safety devices), please be sure to consult with our sales representative in advance.

About Export Control Order in Japan

Products described herein are the objects of controlled goods in Annex 1 (Item 16) of Export Trade Control Order in Japan.
In case of export from Japan, please confirm if it applies to "objective" criteria or an "informed" (by MITI clause) on the basis of "catch all controls for Non-Proliferation of Weapons of Mass Destruction.

Not Recommended for New Designs

Downloaded from Arrow.com.