THIS IS ISSUED IN STRICT CONFIDENCE THAT IT IS NOT USED AS A BASIS FOR MANUFACTURE OR SALE AND THAT IT IS NOT COPIED, REPRINTED OR DISCLOSED TO A THIRD PARTY EITHER WHOLLY OR IN PART WITHOUT THE PRIOR WIRTTEN CONSENT OF CAL TEST ELECTRONICS, INC.

REVISIONS			
REV.	DESCRIPTION	DATE	APPROVED
A	CLASS A RELEASE	5/14/2019	
B	NOTE 2., VOLTAGE: UPDATE BASED ON LVD TESTING, WAS 600 V *NO RATED MEASUREMENT CATEGORY	7/30/2019	

NOTES:

1. MATERIAL:
   BODY, CAP & INNER INSULATOR: NYLON 6.6 (PA), UL94-1, COLORS: BODY & INNER INSULATOR, GREY; CAP, PER PART NUMBER.
   CONTACT, PANEL NUT & ACCESSORIES: BRASS, C360, NICKEL PLATED.
2. SPECIFICATIONS:
   VOLTAGE: 100 V CAT II P2, PER IEC/EN 61010-1.
   CURRENT: 36 A MAX.
   OPERATING TEMPERATURE: 0°C TO +60°C
3. CROSS-HOLE ALIGNED ±3° PERPEDICULAR TO MOUNTING FLATS.
4. MAXIMUM PANEL THICKNESS: 9 mm.
5. MAXIMUM TIGHTENING TORQUE ON M12 PANEL NUT: 2.3 N.m (1.70 FT-LBF).
6. RECOMMENDED ASSEMBLY TOOL: CT2246A.
7. HARDWARE INCLUDED (1 EACH):
   1. PANEL NUT (CT2830)
   2. M4 FLAT WASHER
   3. M4 LOCK WASHER
   4. M4 NUT
8. ROHS 2 COMPLIANT; EXEMPTION ANNEX III 6(C)
9. WEIGHT: 18.3 GRAMS

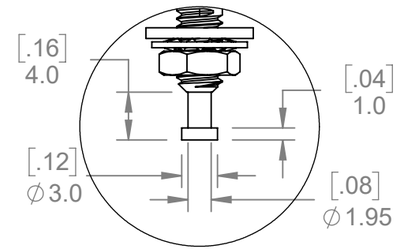

DETAIL B
SCALE 2 : 1
(SOLDER TURRET)

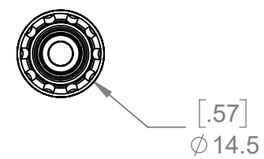

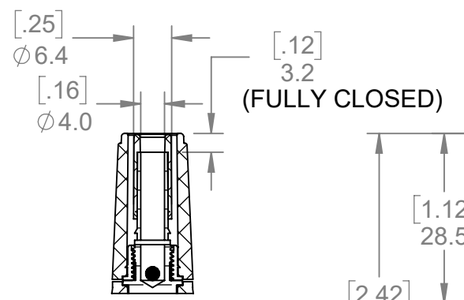

SECTION A-A

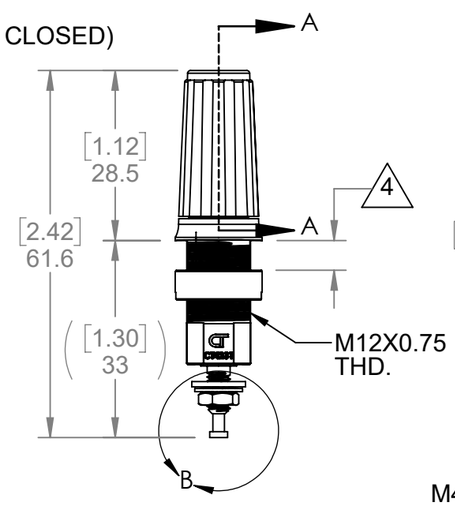

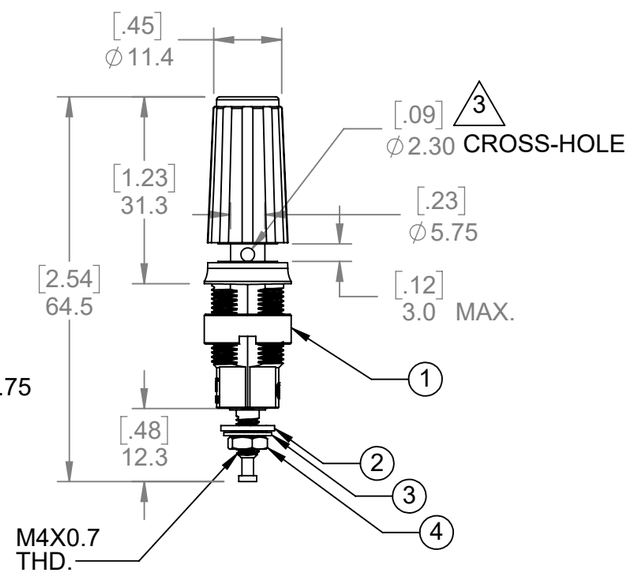

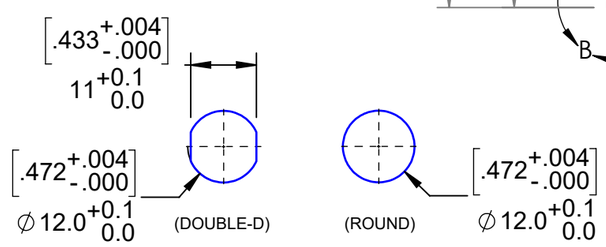

MOUNTING HOLES

PART NUMBER	CONFIGURATION / PLATING	CAP COLOR
CT4231-NI-5	NICKEL PLATED	GREEN
CT4231-NI-2	NICKEL PLATED	RED
CT4231-NI-0	NICKEL PLATED	BLACK

PART NUMBER TABLE

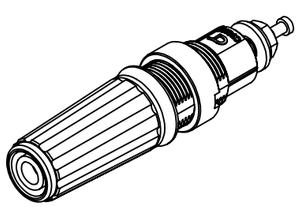

ISOMETRIC VIEW

METRIC

THIRD ANGLE PROJECTION

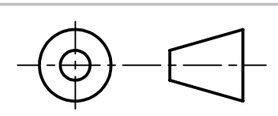

UNLESS OTHERWISE SPECIFIED DIMENSIONS ARE IN MILLIMETERS TOLERANCES ARE: PER DIN ISO 2768m

DO NOT SCALE DRAWING

MATERIAL: SEE NOTES

TREATMENT:

FINISH: SEE NOTES

PROJECT NO. C368

APPROVALS		DATE
DRAWN	WDH	5/1/2019
CHECKER	T.Schmidt	5/14/2019
ENGR.	B.Hansen	5/14/2019
DESIGN ACTIVITY		

Cal Test Electronics 22820 Savi Ranch Parkway Yorba Linda, CA 92887

TITLE: 4 mm SHEATHED BINDING POST, PANEL MOUNT

SIZE	CAGE CODE	DWG. NO.	REV.
B	43F45	P423100	B

SCALE 1:1 SHEET 1 OF 1

Downloaded from Arrow.com.