Alle Rechte vorbehalten/ *All rights reserved*

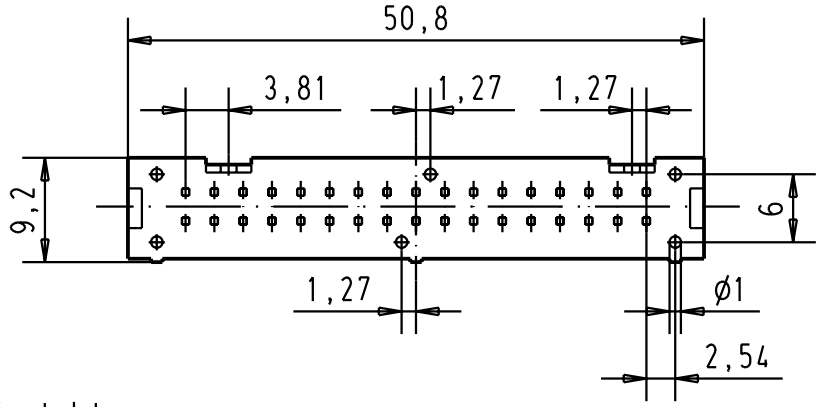

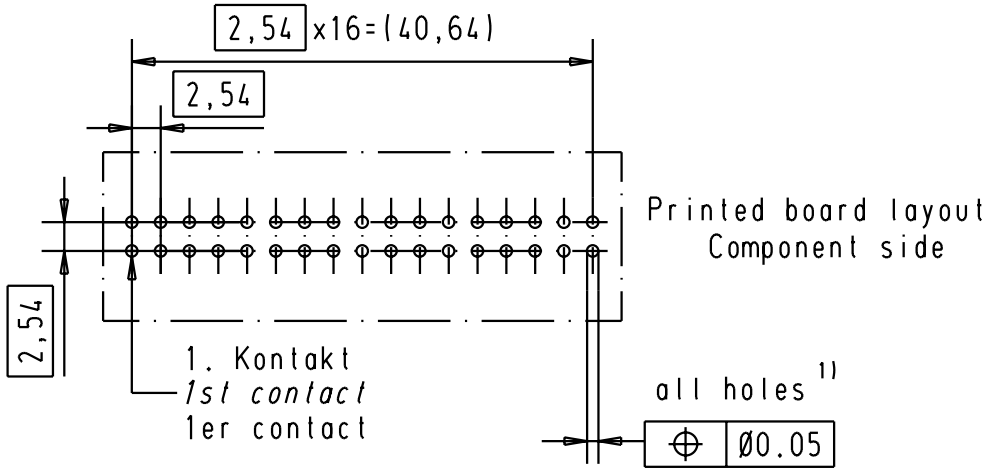

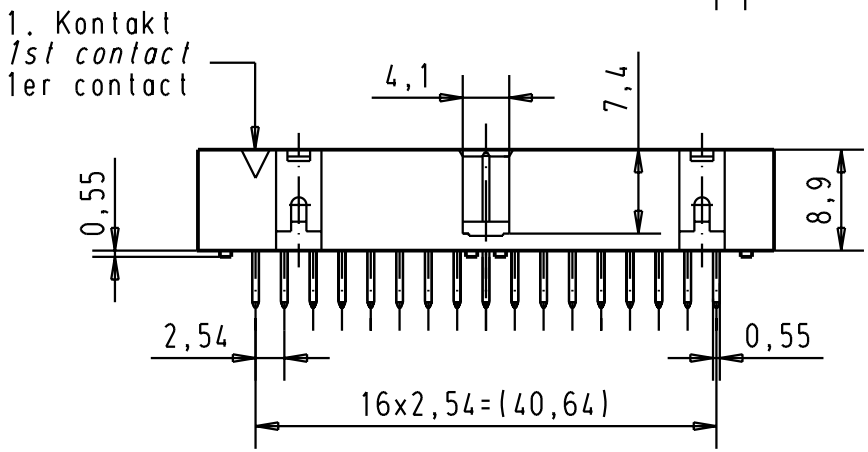

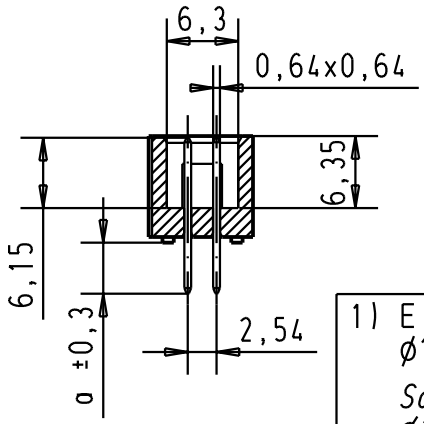

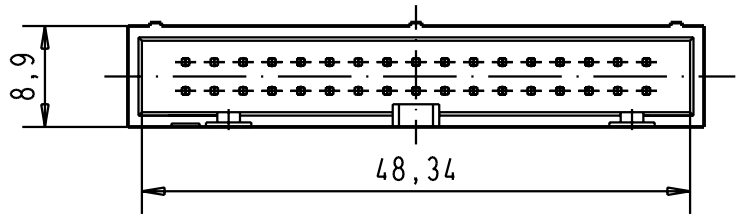

1) Einlotstifte passend fur Lochungen Ø1 ±0,1 nach IEC 60326-3
Solder pins for PCB connections Ø1 ±0,1 as per IEC 60326-3
A souder pour des trous de Ø1 ±0,1 selon IEC 60326-3

09195347322	3	4,5			
09195346322	2	4,5			
09195345322	0.76 µm Au	4,5			
09195347324	3	2,9			
09195346324	2	2,9			
09195345324	0.76 µm Au	2,9	29778	25-APR-02	CV
Part-No.	*performence level*	a	Mod.	Dat.	Name

	Dat.	Name
Detail.	25-APR-02	CV
Insp.		
Stand.		

All Dim. in mm
Orig. Size DIN A 4

HARTING EURL
F-95972 Paris

SEK 19 Male connector
34 poles,
low profile, high temperature
with straight pins

Maßstab/ *Scale* 1.5:1

TB 0919534x32x

Sub.

Blatt/ *Page* 1/2

Downloaded from Arrow.com.