MOSFET - Power, Single N-Channel, D2PAK-7L
650 V, 95 mΩ, 36 A

NVBG095N65S3F

$V_{(BR)DSS}$	$R_{DS(ON)}$ MAX	I_D MAX
650 V	95 mΩ @ 10 V	36 A

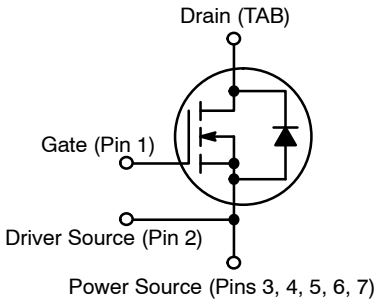

N−CHANNEL MOSFET

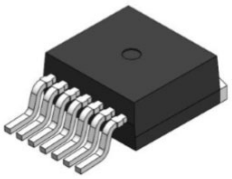

D2PAK−7L
CASE 418BJ

Description

SUPERFET® III MOSFET is **onsemi**'s brand−new high voltage super−junction (SJ) MOSFET family that is utilizing charge balance technology for outstanding low on−resistance and lower gate charge performance. This advanced technology is tailored to minimize conduction loss, provide superior switching performance, and withstand extreme dv/dt rate.

Consequently, SUPERFET III MOSFET is very suitable for the various power system for miniaturization and higher efficiency. SUPERFET III FRFET® MOSFET's optimized reverse recovery performance of body diode can remove additional component and improve system reliability.

In addition, the D2PAK 7 lead package offers Kelvin sense. This allows higher switching speeds and gives designers the ability to reduce the overall application footprint.

Features

- 700 V @ T_J = 150°C
- Typ. $R_{DS(on)}$ = 78 mΩ
- Ultra Low Gate Charge (Typ. Q_g = 66 nC)
- Low Effective Output Capacitance (Typ. $C_{oss(eff.)}$ = 597 pF)
- 100% Avalanche Tested
- AEC−Q101 Qualified and PPAP Capable
- These Devices are Pb−Free and are RoHS Compliant

Typical Applications

- Automotive On Board Charger
- Automotive DC/DC Converter for BEV

MARKING DIAGRAM



VBG095N65S3F = Specific Device Code
A = Assembly Location
Y = Year
WW = Work Week
ZZ = Lot Traceability

ORDERING INFORMATION

See detailed ordering and shipping information on page 6 of this data sheet.

© Semiconductor Components Industries, LLC, 2020

Downloaded from Arrow.com.

ABSOLUTE MAXIMUM RATINGS (T_C = 25°C, Unless otherwise noted)

Symbol	Parameter		Value	Unit
V_{DSS}	Drain−to−Source Voltage		650	V
V_{GSS}	Gate−to−Source Voltage	− DC	±30	V
		− AC (f > 1 Hz)	±30	
I_D	Drain Current	− Continuous (T_C = 25°C)	36	A
		− Continuous (T_C = 100°C)	22.8	
I_{DM}	Drain Current	− Pulsed (Note 1)	90	A
E_{AS}	Single Pulsed Avalanche Energy (Note 2)		440	mJ
I_{AS}	Avalanche Current (Note 2)		4.6	A
E_{AR}	Repetitive Avalanche Energy (Note 1)		2.72	mJ
dv/dt	MOSFET dv/dt		100	V/ns
	Peak Diode Recovery dv/dt (Note 3)		50	
P_D	Power Dissipation	(T_C = 25°C)	272	W
		− Derate Above 25°C	2.176	W/°C
T_J, T_{STG}	Operating and Storage Temperature Range		−55 to +150	°C
T_L	Maximum Lead Temperature for Soldering, 1/8″ from Case for 5 seconds		300	°C

Stresses exceeding those listed in the Maximum Ratings table may damage the device. If any of these limits are exceeded, device functionality should not be assumed, damage may occur and reliability may be affected.

1. Repetitive rating: pulse−width limited by maximum junction temperature.
2. I_{AS} = 4.6 A, R_G = 25 Ω, starting T_J = 25°C.
3. I_{SD} ≤ 18 A, di/dt ≤ 200 A/μs, V_{DD} ≤ 400 V, starting T_J = 25°C.

THERMAL CHARACTERISTICS

Symbol	Parameter	Value	Unit
$R_{\theta JC}$	Thermal Resistance, Junction−to−Case, Max.	0.46	°C/W
$R_{\theta JA}$	Thermal Resistance, Junction−to−Ambient, Max.	40	

Downloaded from Arrow.com.

ELECTRICAL CHARACTERISTICS (T_C = 25°C unless otherwise noted)

Symbol	Parameter	Test Conditions	Min.	Typ.	Max.	Unit
OFF CHARACTERISTICS						
BV_{DSS}	Drain−to−Source Breakdown Voltage	V_{GS} = 0 V, I_D = 1 mA, T_J = 25°C	650			V
		V_{GS} = 0 V, I_D = 10 mA, T_J = 150°C	700			V
$\Delta BV_{DSS}/\Delta T_J$	Breakdown Voltage Temperature Coefficient	I_D = 15 mA, Referenced to 25°C		640		mV/°C
I_{DSS}	Zero Gate Voltage Drain Current	V_{DS} = 650 V, V_{GS} = 0 V			10	μA
		V_{DS} = 520 V, T_C = 125°C		12		
I_{GSS}	Gate−to−Body Leakage Current	V_{GS} = ±30 V, V_{DS} = 0 V			±100	nA
ON CHARACTERISTICS						
$V_{GS(th)}$	Gate Threshold Voltage	V_{GS} = V_{DS}, I_D = 0.86 mA	3.0		5.0	V
$R_{DS(on)}$	Static Drain−to−Source On Resistance	V_{GS} = 10 V, I_D = 18 A		78	95	mΩ
g_{FS}	Forward Transconductance	V_{DS} = 20 V, I_D = 18 A		19		S
DYNAMIC CHARACTERISTICS						
C_{iss}	Input Capacitance	V_{DS} = 400 V, V_{GS} = 0 V, f = 1 MHz		3020		pF
C_{oss}	Output Capacitance			61		
$C_{oss(eff.)}$	Effective Output Capacitance	V_{DS} = 0 V to 400 V, V_{GS} = 0 V		597		pF
$C_{oss(er.)}$	Energy Related Output Capacitance	V_{DS} = 0 V to 400 V, V_{GS} = 0 V		107		pF
$Q_{g(tot)}$	Total Gate Charge at 10 V	V_{GS} = 10 V, V_{DS} = 400 V, I_D = 18 A (Note 4)		66		nC
Q_{gs}	Gate−to−Source Gate Charge			22		
Q_{gd}	Gate−to−Drain “Miller” Charge			26		
ESR	Equivalent Series Resistance	f = 1 MHz		2.4		Ω
SWITCHING CHARACTERISTICS						
$t_{d(on)}$	Turn-On Delay Time	V_{GS} = 10 V, V_{DD} = 400 V, I_D = 18 A, R_g = 2.2 Ω (Note 4)		29.2		ns
t_r	Turn-On Rise Time			23.8		ns
$t_{d(off)}$	Turn-Off Delay Time			69.6		ns
t_f	Turn-Off Fall Time			4.2		ns
SOURCE-DRAIN DIODE CHARACTERISTICS						
I_S	Maximum Continuous Source−to−Drain Diode Forward Current	V_{GS} = 0 V			36	A
I_{SM}	Maximum Pulsed Source−to−Drain Diode Forward Current	V_{GS} = 0 V			90	A
V_{SD}	Source−to−Drain Diode Forward Voltage	V_{GS} = 0 V, I_{SD} = 18 A			1.3	V
t_{rr}	Reverse Recovery Time	V_{GS} = 0 V, dI_F/dt = 100 A/μs, I_{SD} = 18 A		100		ns
Q_{rr}	Reverse Recovery Charge			372		nC

Product parametric performance is indicated in the Electrical Characteristics for the listed test conditions, unless otherwise noted. Product performance may not be indicated by the Electrical Characteristics if operated under different conditions.

4. Essentially independent of operating temperature typical characteristics.

Downloaded from Arrow.com.

TYPICAL CHARACTERISTICS

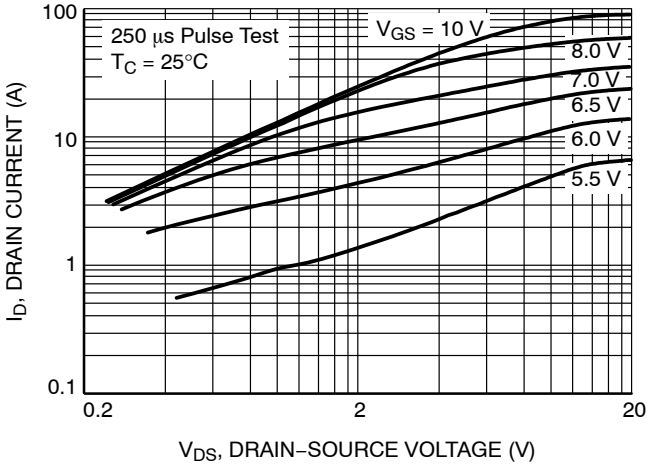

Figure 1. On−Region Characteristics

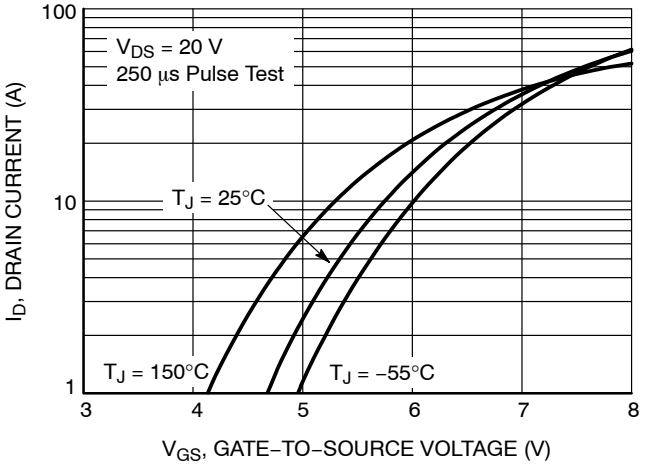

Figure 2. Transfer Characteristics

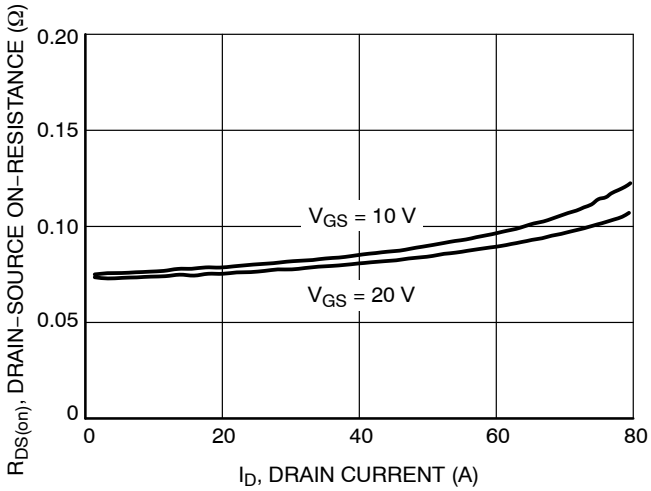

Figure 3. On−Resistance Variation vs. Drain Current and Gate Voltage

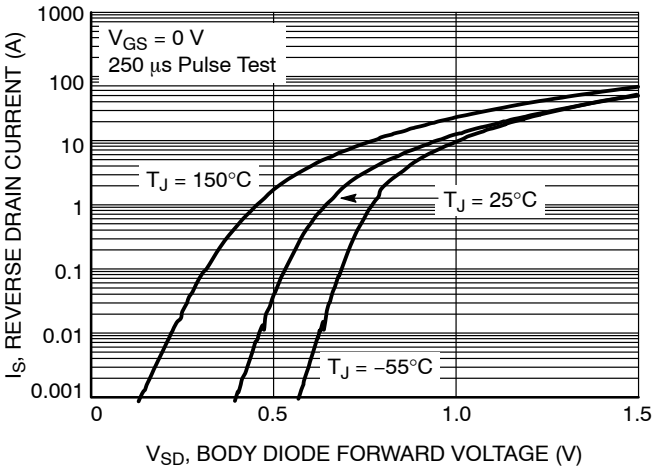

Figure 4. Body Diode Forward Voltage Variation vs. Source Current and Temperature

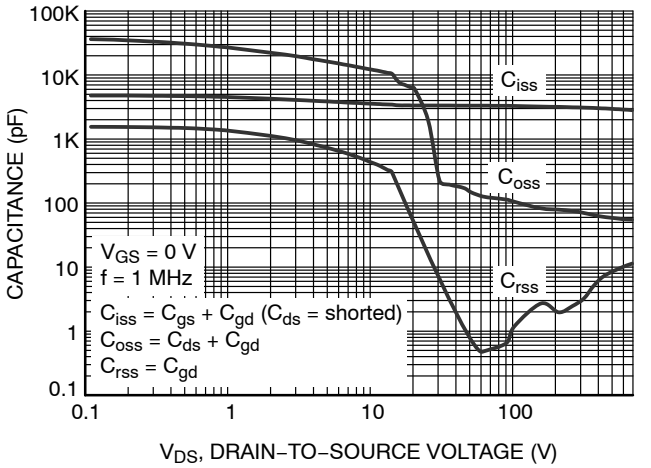

Figure 5. Capacitance Characteristics

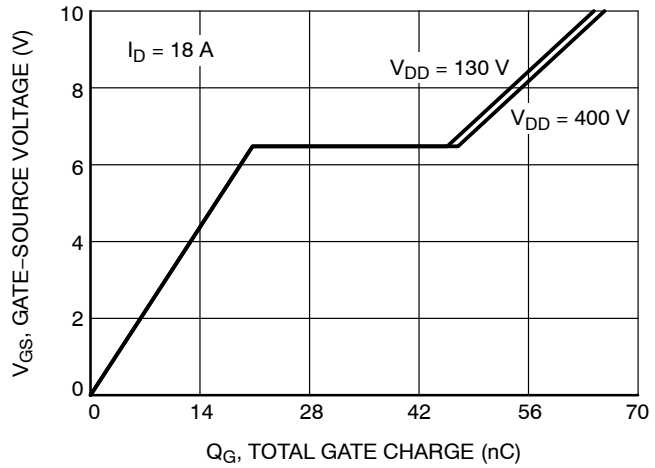

Figure 6. Gate Charge Characteristics

Downloaded from Arrow.com.

TYPICAL CHARACTERISTICS

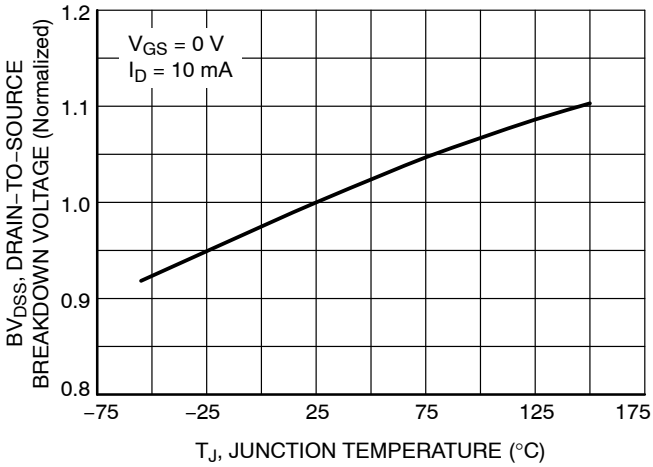

Figure 7. Breakdown Voltage Variation vs. Temperature

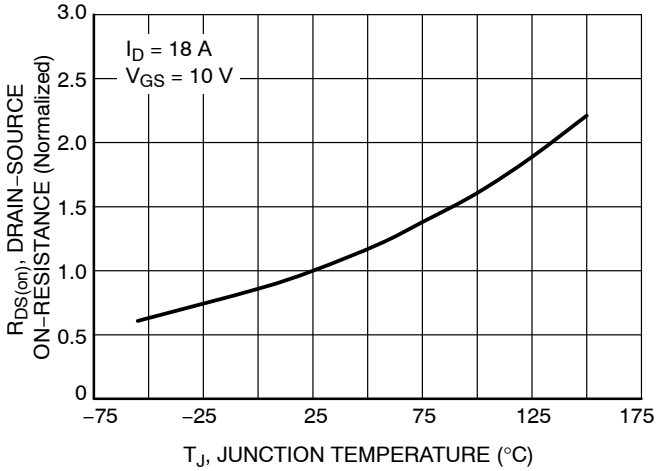

Figure 8. On−Resistance Variation vs. Temperature

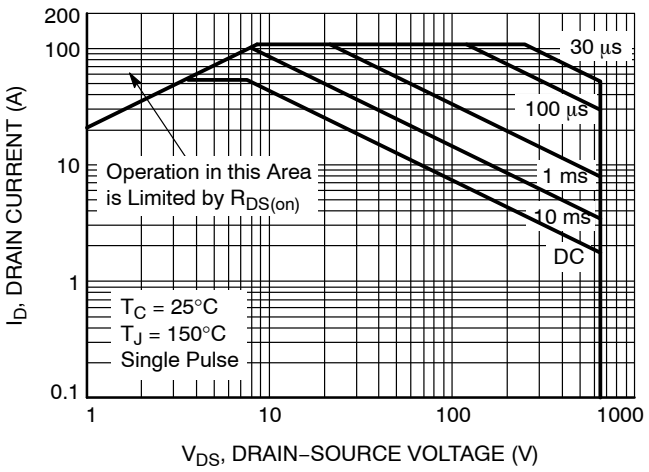

Figure 9. Maximum Safe Operating Area

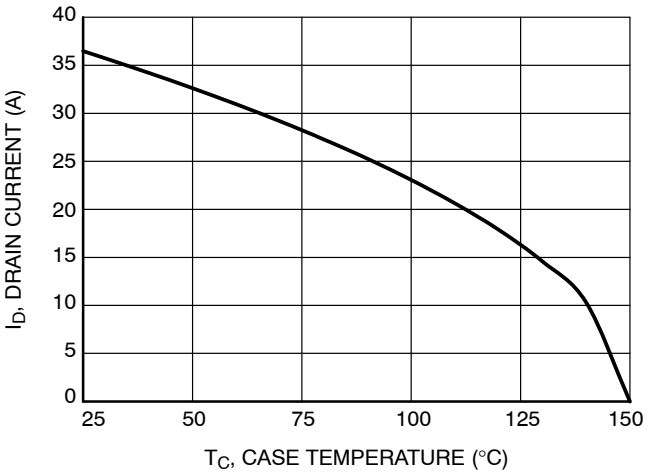

Figure 10. Maximum Drain Current vs. Case Temperature

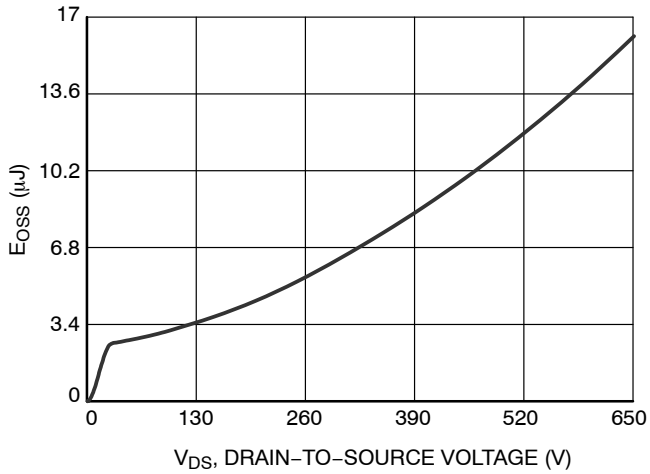

Figure 11. E_{OSS} vs. Drain−to−Source Voltage

Downloaded from Arrow.com.

TYPICAL CHARACTERISTICS

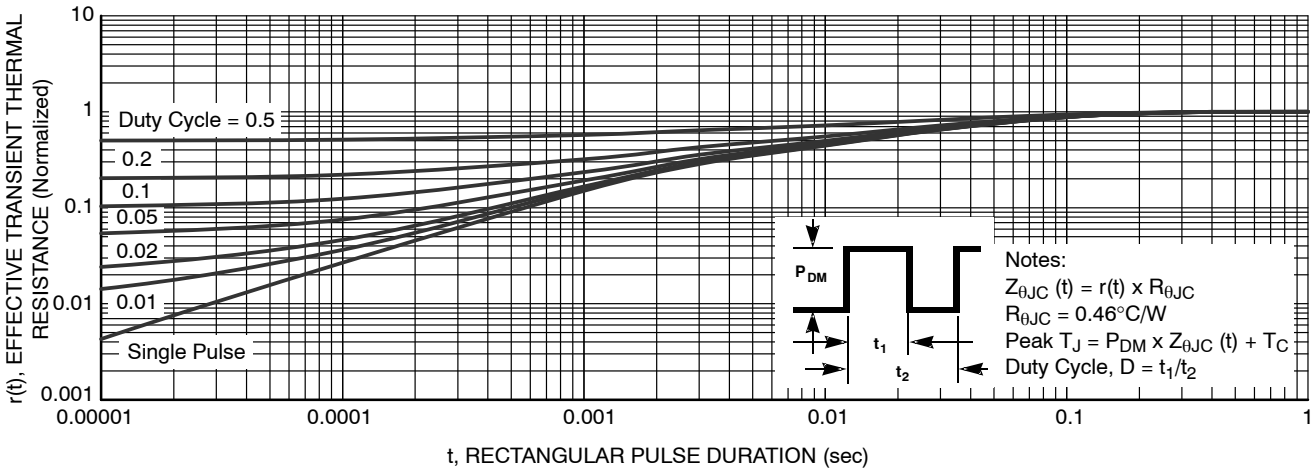

Figure 12. Transient Thermal Response

DEVICE ORDERING INFORMATION

Device	Package	Shipping†
NVBG095N65S3F	D2PAK−7L	800 / Tape & Reel

†For information on tape and reel specifications, including part orientation and tape sizes, please refer to our Tape and Reel Packaging Specifications Brochure, BRD8011/D.

Downloaded from Arrow.com.

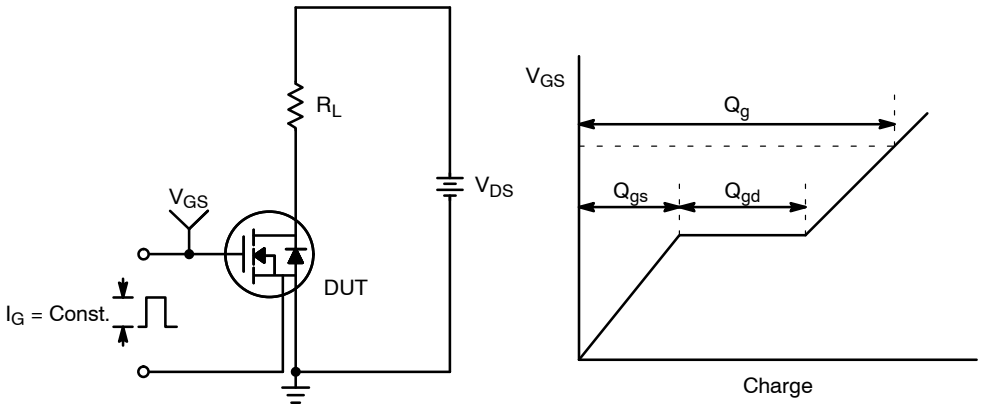

Figure 13. Gate Charge Test Circuit & Waveform

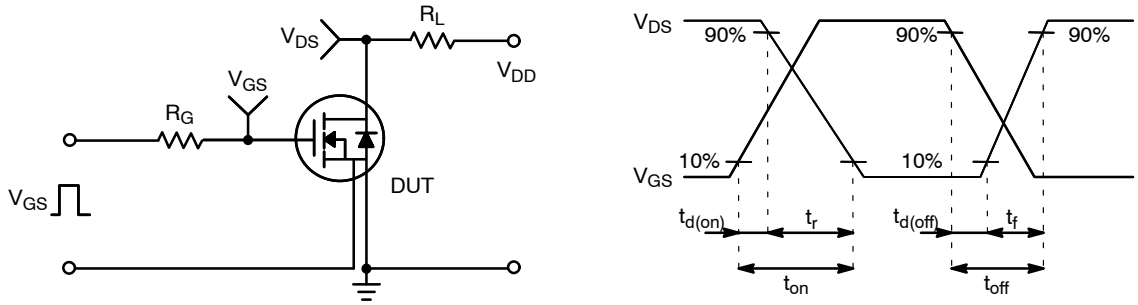

Figure 14. Resistive Switching Test Circuit & Waveforms

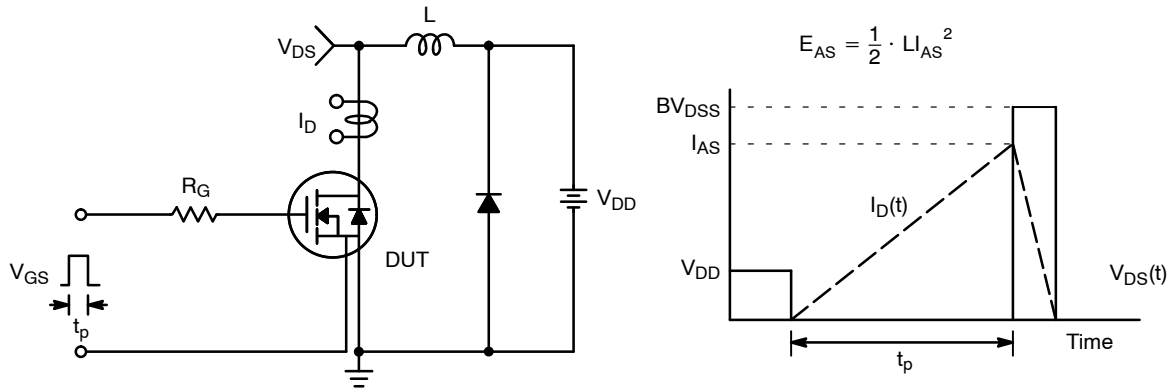

Figure 15. Unclamped Inductive Switching Test Circuit & Waveforms

Downloaded from Arrow.com.

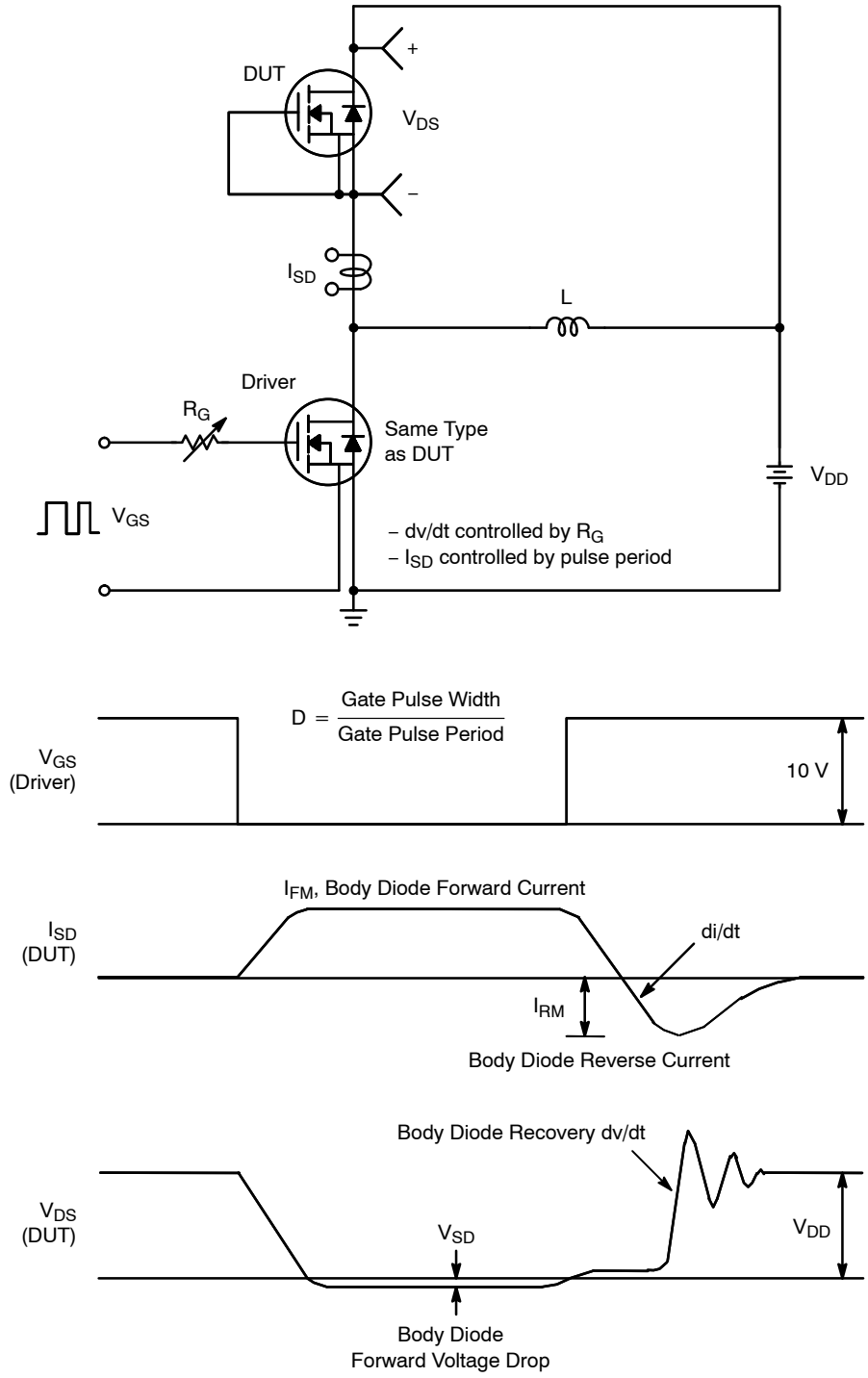

Figure 16. Peak Diode Recovery dv/dt Test Circuit & Waveforms

SUPERFET and FRFET are registered trademarks of Semiconductor Components Industries, LLC.

Downloaded from Arrow.com.

PACKAGE DIMENSIONS

D²PAK7 (TO−263−7L HV)
CASE 418BJ
ISSUE B

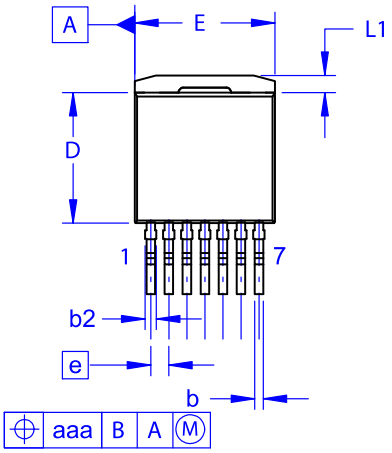

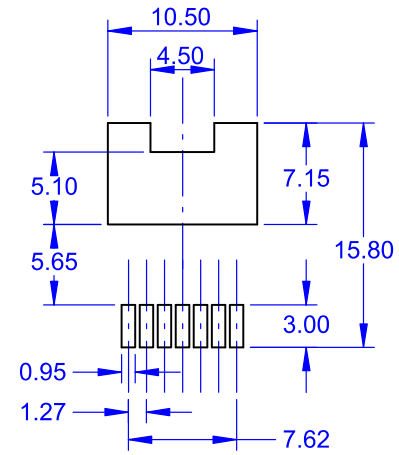

LAND PATTERN RECOMMENDATION

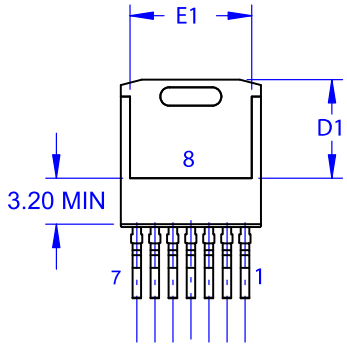

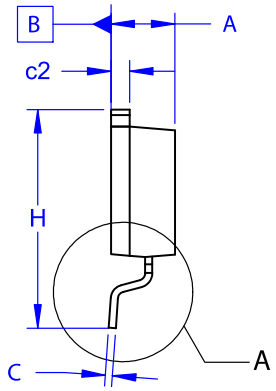

NOTES:

A. PACKAGE CONFORMS TO JEDEC TO-263 VARIATION CB EXCEPT WHERE NOTED.
B. ALL DIMENSIONS ARE IN MILLIMETERS.
C. OUT OF JEDEC STANDARD VALUE.
D. DIMENSION AND TOLERANCE AS PER ASME Y14.5-2009.
E. DIMENSIONS ARE EXCLUSIVE OF BURRS, MOLD FLASH AND TIE BAR PROTRUSIONS.

DIM	MILLIMETERS		
	MIN	NOM	MAX
A	4.30	4.50	4.70
A1	0.00	0.10	0.20
b2	0.60	0.70	0.80
b	0.51	0.60	0.70
c	0.40	0.50	0.60
c2	1.20	1.30	1.40
D	9.00	9.20	9.40
D1	6.15	6.80	7.15
E	9.70	9.90	10.20
E1	7.15	7.65	8.15
e	~	1.27	~
H	15.10	15.40	15.70
L	2.44	2.64	2.84
L1	1.00	1.20	1.40
L3	~	0.25	~
aaa	~	~	0.25

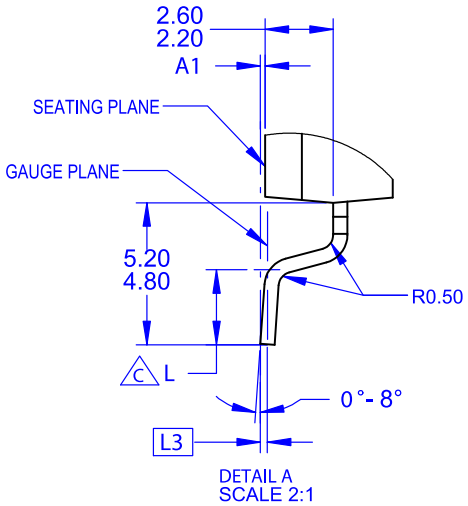

Downloaded from Arrow.com.

onsemi, ONSEMI , and other names, marks, and brands are registered and/or common law trademarks of Semiconductor Components Industries, LLC dba "**onsemi**" or its affiliates and/or subsidiaries in the United States and/or other countries. **onsemi** owns the rights to a number of patents, trademarks, copyrights, trade secrets, and other intellectual property. A listing of **onsemi's** product/patent coverage may be accessed at www.onsemi.com/site/pdf/Patent−Marking.pdf. **onsemi** reserves the right to make changes at any time to any products or information herein, without notice. The information herein is provided "as−is" and **onsemi** makes no warranty, representation or guarantee regarding the accuracy of the information, product features, availability, functionality, or suitability of its products for any particular purpose, nor does **onsemi** assume any liability arising out of the application or use of any product or circuit, and specifically disclaims any and all liability, including without limitation special, consequential or incidental damages. Buyer is responsible for its products and applications using **onsemi** products, including compliance with all laws, regulations and safety requirements or standards, regardless of any support or applications information provided by **onsemi**. "Typical" parameters which may be provided in **onsemi** data sheets and/or specifications can and do vary in different applications and actual performance may vary over time. All operating parameters, including "Typicals" must be validated for each customer application by customer's technical experts. **onsemi** does not convey any license under any of its intellectual property rights nor the rights of others. **onsemi** products are not designed, intended, or authorized for use as a critical component in life support systems or any FDA Class 3 medical devices or medical devices with a same or similar classification in a foreign jurisdiction or any devices intended for implantation in the human body. Should Buyer purchase or use **onsemi** products for any such unintended or unauthorized application, Buyer shall indemnify and hold **onsemi** and its officers, employees, subsidiaries, affiliates, and distributors harmless against all claims, costs, damages, and expenses, and reasonable attorney fees arising out of, directly or indirectly, any claim of personal injury or death associated with such unintended or unauthorized use, even if such claim alleges that **onsemi** was negligent regarding the design or manufacture of the part. **onsemi** is an Equal Opportunity/Affirmative Action Employer. This literature is subject to all applicable copyright laws and is not for resale in any manner.

PUBLICATION ORDERING INFORMATION

LITERATURE FULFILLMENT:
Email Requests to: orderlit@onsemi.com

onsemi Website: www.onsemi.com

TECHNICAL SUPPORT
North American Technical Support:
Voice Mail: 1 800−282−9855 Toll Free USA/Canada
Phone: 011 421 33 790 2910

Europe, Middle East and Africa Technical Support:
Phone: 00421 33 790 2910
For additional information, please contact your local Sales Representative

◊

Downloaded from Arrow.com.