CR Timer IC

50V 1ch Timer IC for Automotive

BD9555FVM-C

General Description

ROHM's BD9555FVM-C is 50V-withstanding 1ch CR timer IC. Cycle and duty width can be set through external resistance and capacity. It is most suitable as timer and OSC for Automotive, so input voltage range and operating temperature range are wide.

Features

- AEC-Q100 Qualified(Note1)
- Frequency and Duty Width Setting Through External Resistance and Capacity
- Wide Input Voltage Range
- Wide Operating Temperature Range
- Very Small MSOP8 Package

(Note1:Grade1)

Key Specifications

- Input Voltage Range: 4.5V to 42V
- Operating Temperature Range: -40°C to +125°C

Special Characteristics

- PWM Frequency Range: 1Hz to 10000Hz
- Duty Range: 1% to 99%

Package

MSOP8: **W(Typ) x D(Typ) x H(Max)** 2.90mm x 4.00mm x 0.90mm

Applications

All set for Automotive using timer or OSC such as Automotive LED module, etc.

Typical Application Circuit

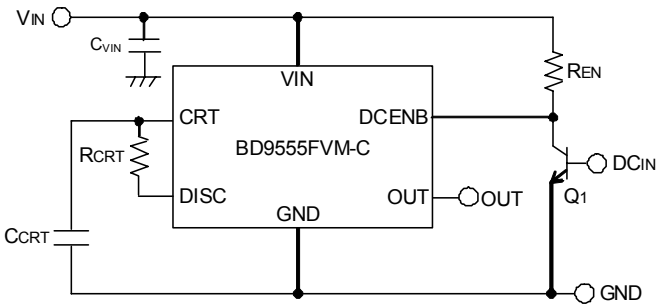

Pin Configurations, Descriptions and Marking Diagram

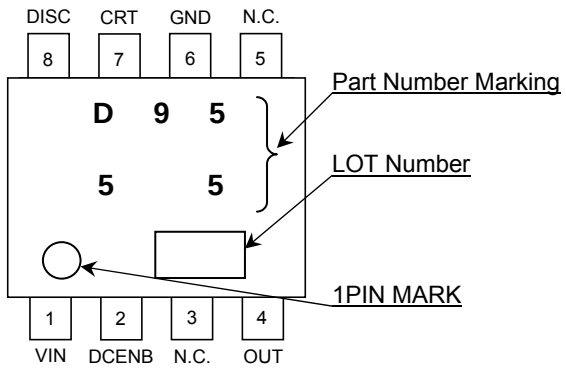

MSOP8 (TOP VIEW)

Pin No.	Symbol	Function
1	VIN	Power supply
2	DCENB	"L":Output fixed "H" / "H":PWM output
3	N.C.	N.C.
4	OUT	Output
5	N.C.	N.C.
6	GND	GND
7	CRT	CR connection
8	DISC	Discharge setting

Ordering Information

B D 9 5 5 5 F V M – C T R

- Part Number
- Timer IC
- Package FVM : MSOP8
- Product Rank C : for Automotive
- Packaging and forming specification Embossed tape and reel TR : The pin number 1 is the upper right

○Product structure : Silicon monolithic integrated circuit ○This product has no designed protection against radioactive rays

© 2014 ROHM Co., Ltd. All rights reserved.

Downloaded from Arrow.com.

Physical Dimension, Tape and Reel Information

Package Name	MSOP8

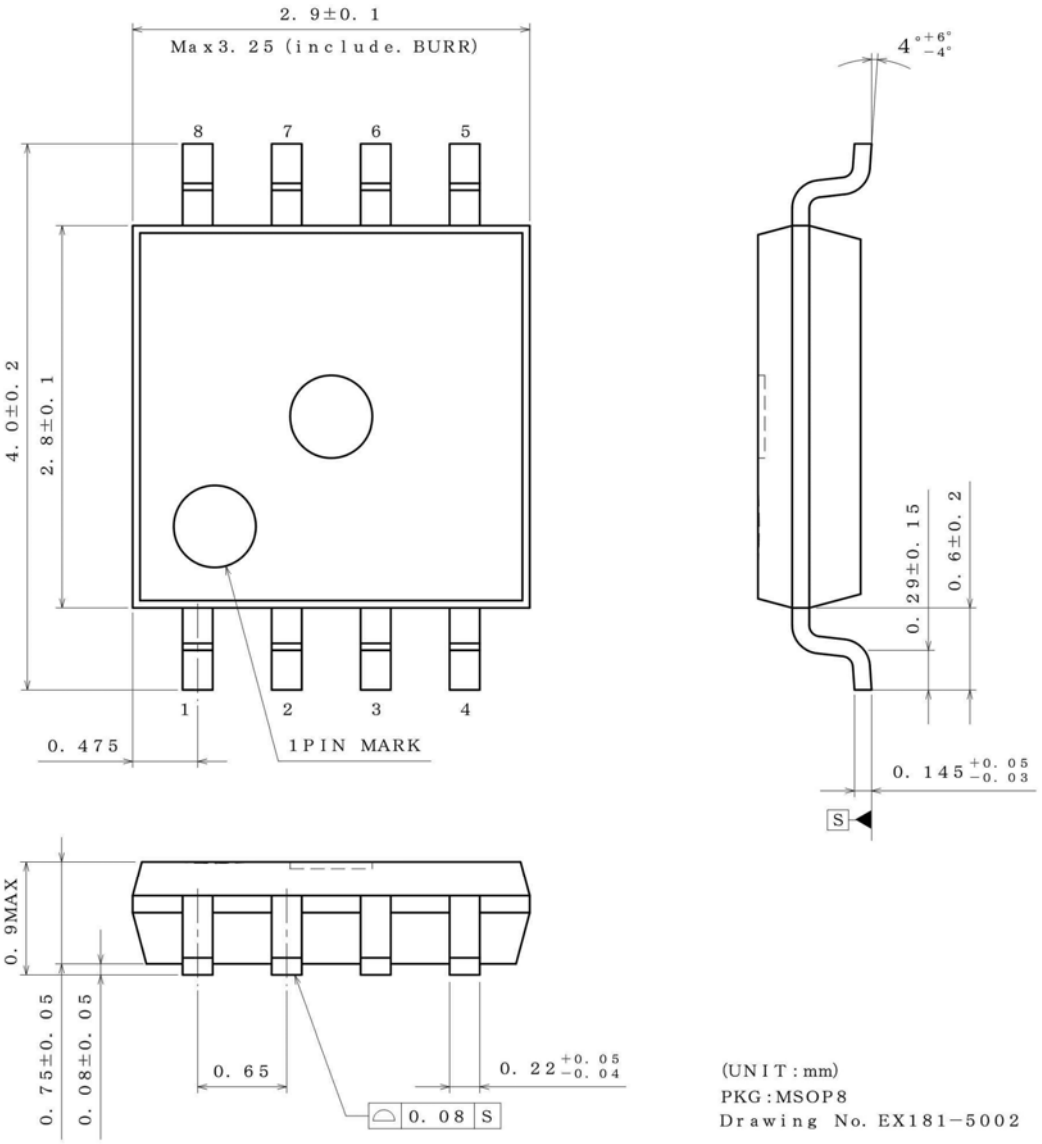

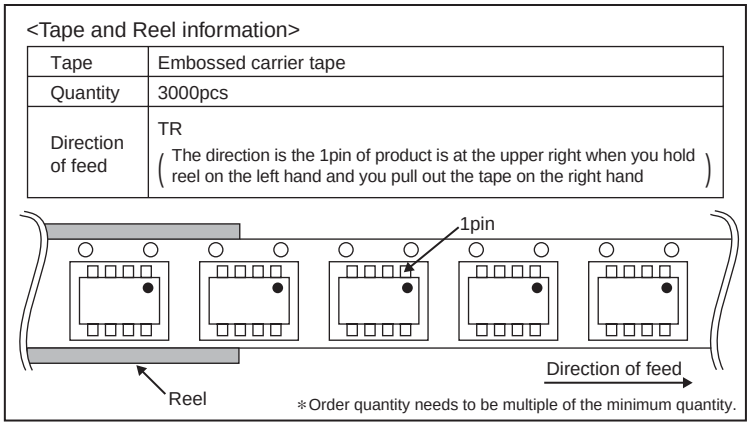

© 2014 ROHM Co., Ltd. All rights reserved.

Downloaded from Arrow.com.

Absolute Maximum Ratings

Parameter	Symbol	Rating	Unit
Power Supply Voltage	V_{IN}	-0.3 to +50	V
CRT, DISC, DCENB, OUT Terminal Voltage	V_{CRT}, V_{DISC}, V_{DCENB}, V_{OUT}	GND-0.3 to V_{IN} +0.3	V
Output Current	Io	70	mA
Power Dissipation	Pd	0.38 (Note1)	W
Operating Temperature Range	Topr	-40 to +125	°C
Storage Temperature Range	Tstg	-55 to +150	°C
Junction Temperature	Tjmax	150	°C

(Note1) Pd deleted at 3.8mW/°C at temperatures above Ta=25°C.

Caution: Operating the IC over the absolute maximum ratings may damage the IC. The damage can either be a short circuit between pins or an open circuit between pins and the internal circuitry. Therefore, it is important to consider circuit protection measures, such as adding a fuse, in case the IC is operated over the absolute maximum ratings.

Recommended Operating Range

Parameter	Symbol	Limit	Unit
Power Supply Voltage	V_{IN}	4.5 ~ 42	V
Operating Temperature Range	Topr	-40 ~ +125	°C
CR Timer Frequency Range	F_{PWM}	1~10000	Hz
PWM Minimum Pulse Width	T_{MIN}	1	μs

Recommended Operating Conditions

Parameter	Symbol	Limit			Unit	Conditions
		Min	Typ	Max		
Input Capacitor	C_{IN}	0.1	-	-	μF	Ceramic capacitor recommended
CRT Terminal Capacitor	C_{CRT}	19p	-	18μ	F	Ceramic capacitor recommended
CRT Terminal Resistor	R_{CRT}	500	-	5M	Ω	

(Note2) The minimum value of capacitor must be met this specifications over full operating conditions. (ex. Temperature, DC bias, aging conditions)
(Note3) Set C_{CRT}, R_{CRT} to become desired frequency and Duty width by using equations shown in P.8.

Electrical Characteristics (Unless Otherwise Specified Ta=-40 to +125°C, V_{IN} =13.0V)

Parameter	Symbol	Limit			Unit	Conditions
		Min	Typ	Max		
Circuit Current	I_{IN}	-	1.00	3.00	mA	
CRT Terminal Charge Current	I_{CRT_SO}	29.75	35.00	40.25	μA	V_{CRT}=0.9V
CRT Terminal Charge ON Voltage	V_{CRT_CHA}	0.99	1.10	1.21	V	
CRT Terminal Discharge ON Voltage	V_{CRT_DIS}	2.7	3.0	3.3	V	
CRT Terminal Charge Resistance	R_{CHA}	51.6	54.3	57.0	kΩ	R_{CHA} = (V_{CRT_DIS} - V_{CRT_CHA}) / I_{CRT_SO}
DISC Terminal Discharge Resistance	R_D	-	50.0	100	Ω	V_{CRT}=3.4V
DCENB Terminal "H" Input Voltage	V_{IH_DCENB}	4.4	-	V_{IN} +0.2	V	
DCENB Terminal "L" Input Voltage	V_{IL_DCENB}	GND -0.2	-	3.6	V	
"H" Output Voltage	V_{OH}	11.0	12.3	-	V	I_{OH}=-10mA
"L" Output Voltage	V_{OL}	-	1.28	3.8	V	I_{OL}=50mA

© 2014 ROHM Co., Ltd. All rights reserved.

Downloaded from Arrow.com.

Typical Performance Curves

(Reference Data : Unless Otherwise Specified V_{IN}=13.0V, R_{CRT} =2.7kΩ, C_{CRT} =0.033μF, <F_{PWM}=500Hz, Duty=5% setting>)

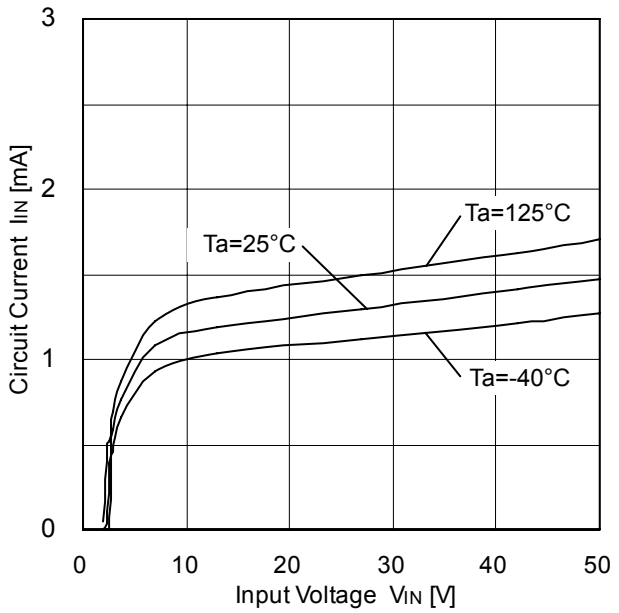

Figure 1. Circuit Current vs Input Voltage

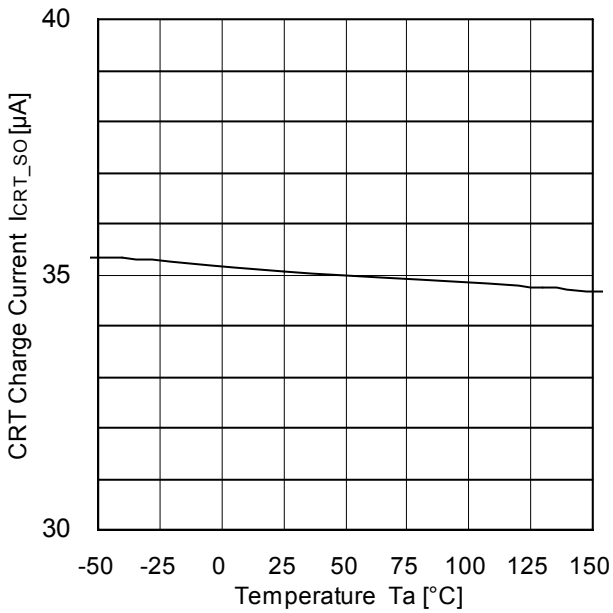

Figure 2. CRT Charge Current vs Temperature

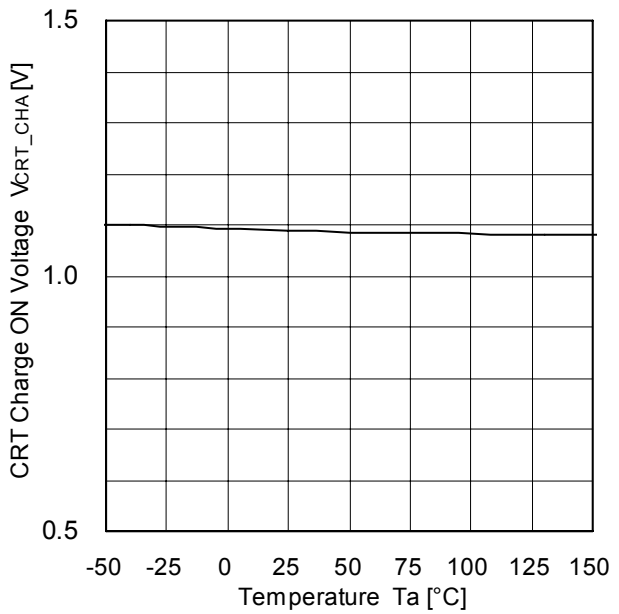

Figure 3. CRT Charge ON Voltage vs Temperature

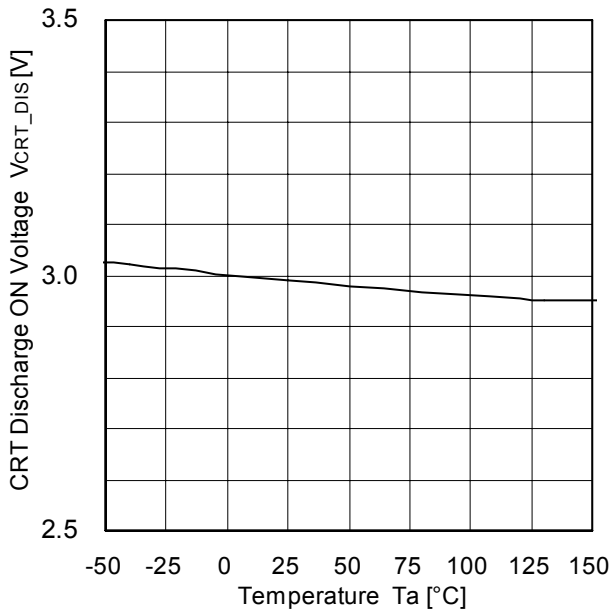

Figure 4. CRT Discharge ON Voltage vs Temperature

© 2014 ROHM Co., Ltd. All rights reserved.

Downloaded from Arrow.com.

Typical Performance Curves – continued

(Reference Data : Unless Otherwise Specified V_{IN}=13.0V, R_{CRT} =2.7kΩ, C_{CRT} =0.033μF, <F_{PWM}=500Hz, Duty=5% setting>)

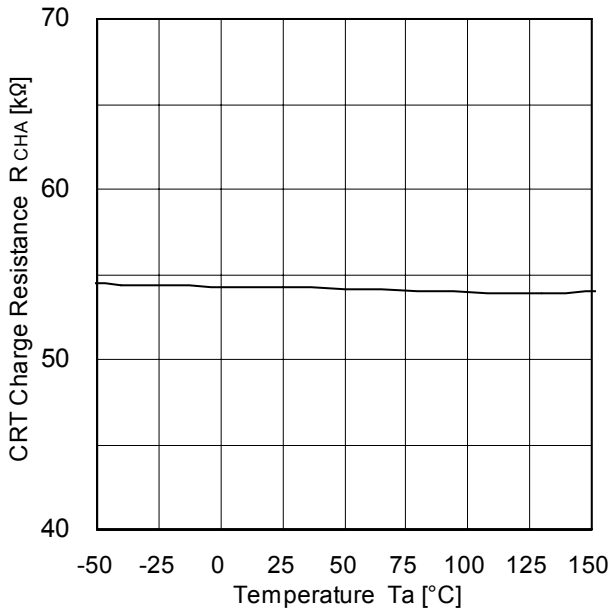

Figure 5. CRT Charge Resistance vs Temperature

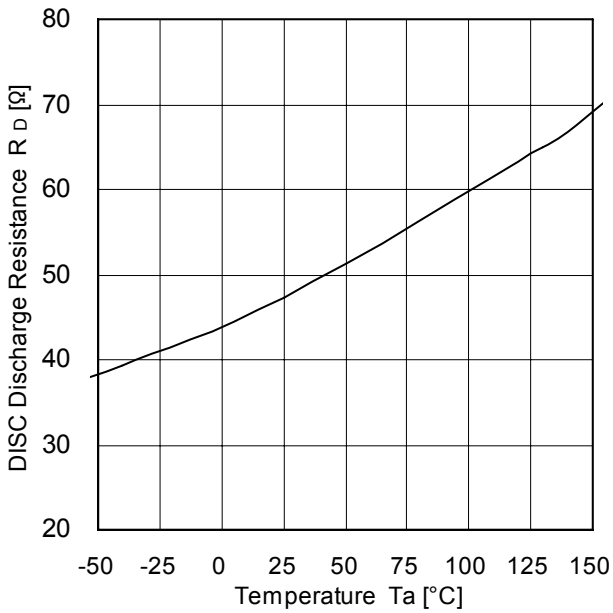

Figure 6. DISC Discharge Resistance vs Temperature

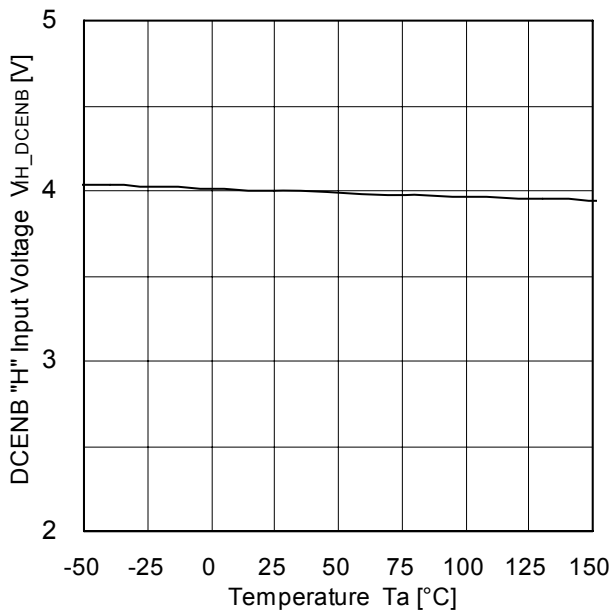

Figure 7. DCENB “H” Input Voltage vs Temperature

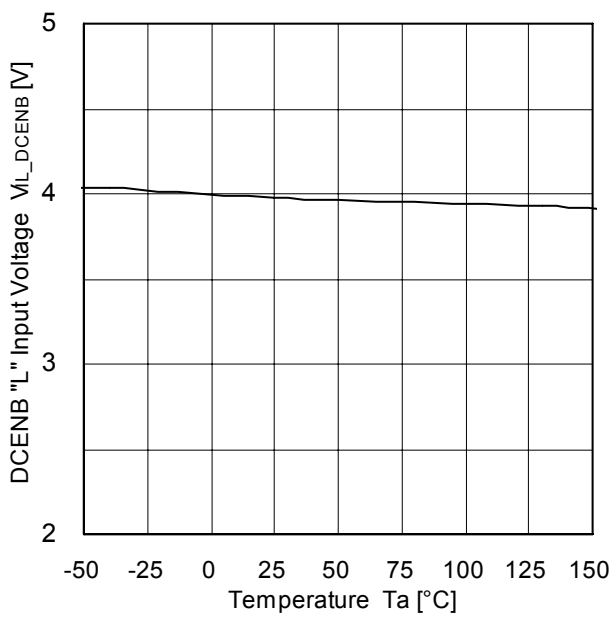

Figure 8. DCENB “L” Input Voltage vs Temperatute

© 2014 ROHM Co., Ltd. All rights reserved.

Downloaded from Arrow.com.

Typical Performance Curves – continued

(Reference Data : Unless Otherwise Specified V_{IN}=13.0V, R_{CRT} =2.7kΩ, C_{CRT} =0.033μF, <F_{PWM}=500Hz, Duty=5% setting>)

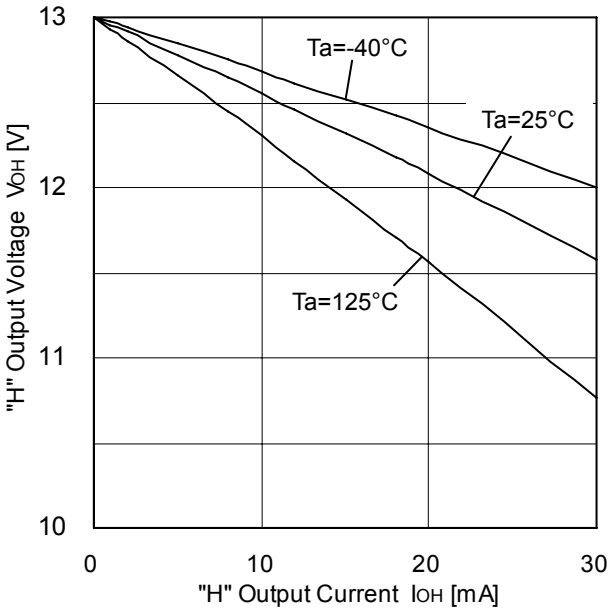

Figure 9. “H” Output Voltage vs “H” Output Current

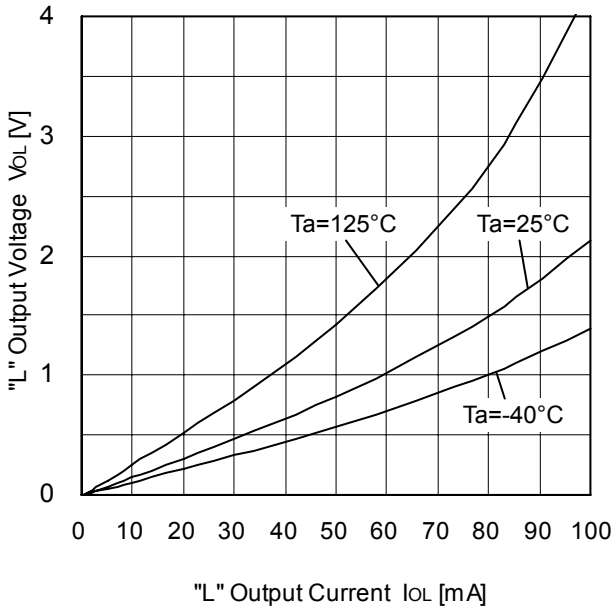

Figure 10. “L” Output Voltage vs “L” Output Current

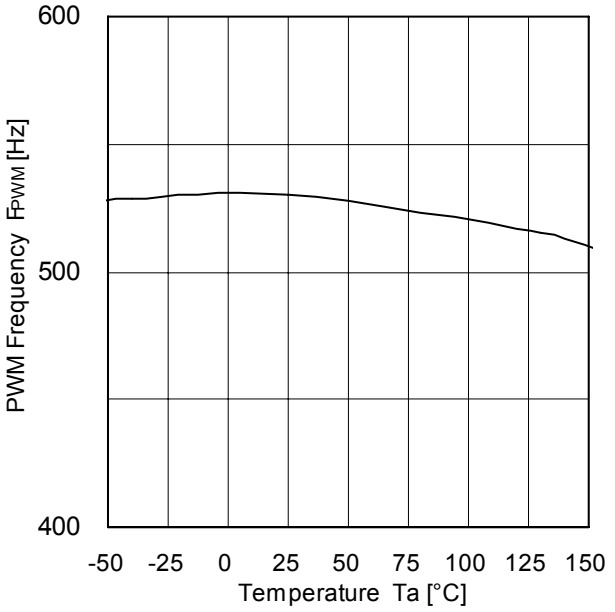

Figure 11. PWM Frequency vs Temperature

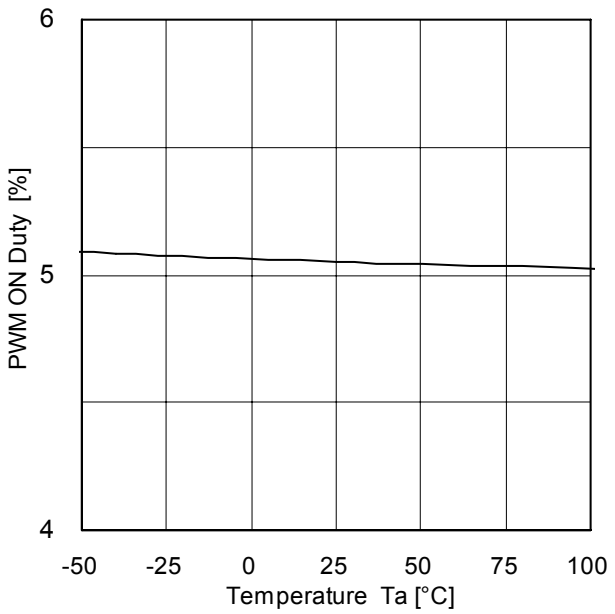

Figure 12. PWM On Duty vs Temperature

© 2014 ROHM Co., Ltd. All rights reserved.

Downloaded from Arrow.com.

Block Diagram

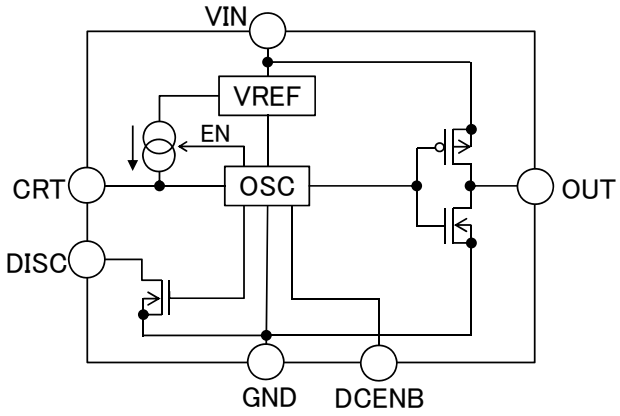

Figure 13. BD9555FVM-C Block Diagram

Functional Description

Timer operation ON switches to OFF depending on DCENB terminal voltage.
When DCENB terminal voltage under V_{IL_DCENB}(3.6V(Max)), timer operation turns to OFF and output is “H”.
When DCENB terminal voltage over V_{IH_DCENB}(4.4V(Min)), CR timer function in IC is activated and triangular waveform is generated at CRT terminal.
Output is “L” while CRT voltage is ramping up, and output is “H” while CRT voltage is ramping down.
Ramp up / down time of CRT voltage can be set by values of external components (C_{CRT}, R_{CRT})

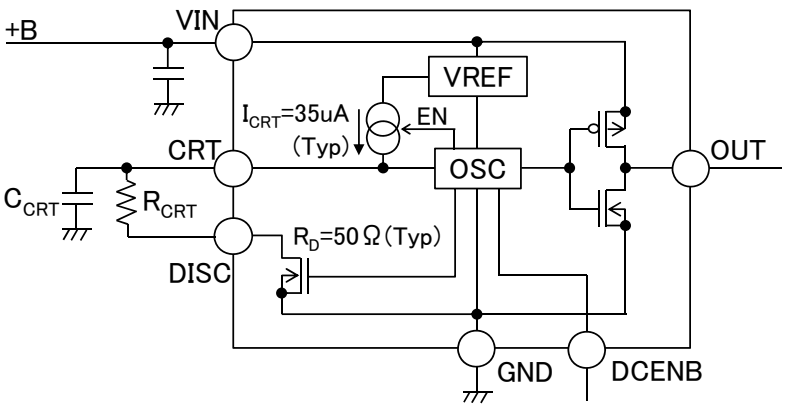

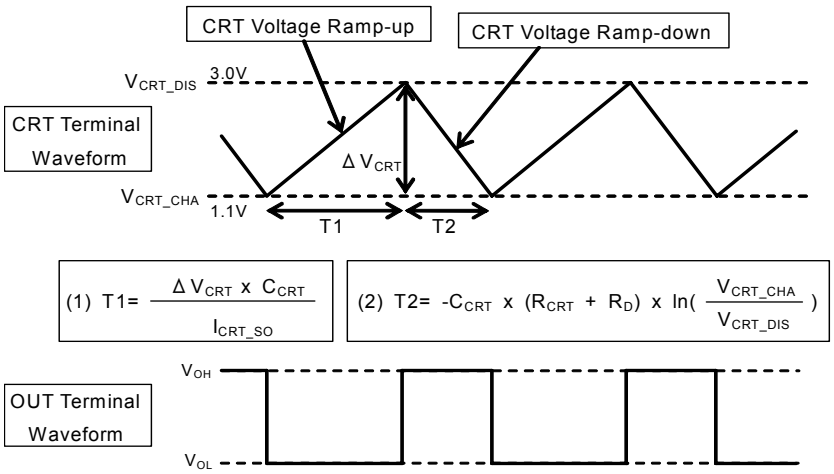

© 2014 ROHM Co., Ltd. All rights reserved.

Downloaded from Arrow.com.

(1)CRT Ramp up Time T1

CRT ramp up time can be obtained from the following equations:

$$T1 = \frac{\Delta V_{CRT} \times C_{CRT}}{I_{CRT_SO}} \quad [s]$$

where:

I_{CRT_SO} is the CRT Terminal Charge Current 35μA (Typ)

(2)CRT Ramp down Time T2

CRT ramp down time is defined by discharge period due to external capacity C_{CRT} and resistance (R_{CRT}+R_D).
(CRT Terminal Charge Current is OFF at CRT ramp down.)
Make sure that T2 is set at not smaller than Min. pulse width 1μs.

$$T2 = -C_{CRT} \times (R_{CRT} + R_D) \times \ln\left(\frac{V_{CRT_CHA}}{V_{CRT_DIS}}\right) \quad [s]$$

where:

R_D is the CRT Terminal Discharge Resistance	50Ω (Typ)
V_{CRT_CHA} is the CRT Terminal Charge ON Voltage	1.1V(Typ)
V_{CRT_DIS} is the CRT Terminal Discharge ON Voltage	3.0V(Typ)

(3)Frequency F_{PWM}

PWM Frequency is defined by T1 and T2.

$$F_{PWM} = \frac{1}{T1 + T2} \quad [Hz]$$

(4)ON Duty (D_{ON})

Like the above, PWM ON duty is defined by T1 and T2.

$$D_{ON} = \frac{T2}{T1 + T2}$$

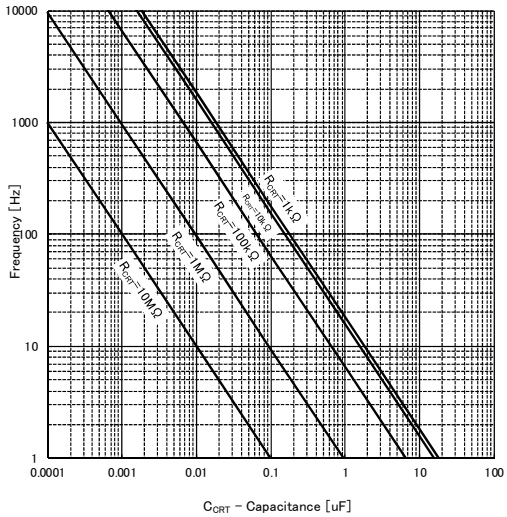

(Ex) In case of F_{PWM}=500Hz and 6% Duty(Typ)

From F_{PWM}=500Hz;

$T1 + T2 = 1 / F_{PWM} = 1 / 500Hz = 2000μs$

From ON Duty = 6%; CRT ramp up time T1 is

$T1 = (T1 + T2) \times 0.94 = 1880μs$

External capacity C_{CRT} is;

$C_{CRT} = T1 \times (I_{CRT_SO} / \Delta V_{CRT}) = 1880μs \times 35μA / 1.9V \fallingdotseq$ <u>0.035μF</u>

CRT ramp down time T2 is;

$T2 = (T1 + T2) \times 0.06 = 120μs$

External resistance R_{CRT} is;

$R_{CRT} = -T2 / (C_{CRT} \times \ln(V_{CRT_CHA} / V_{CRT_DIS})) - R_D$

$= -120μs / (0.035μF \times \ln(1.1 / 3.0)) - 50Ω \fallingdotseq$ <u>3.4kΩ</u>

And the characteristics example of frequency and duty is shown by the right figure.
This is the reference value of external components, please decide its value by the above equations.

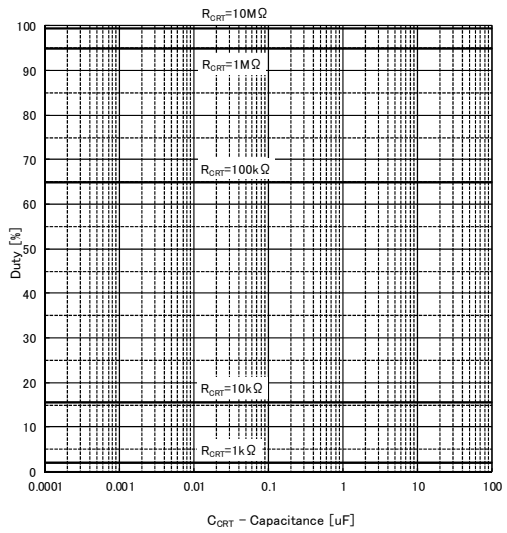

Figure 14. Frequency and Duty Characteristics Example

© 2014 ROHM Co., Ltd. All rights reserved.

Downloaded from Arrow.com.

Timing Chart

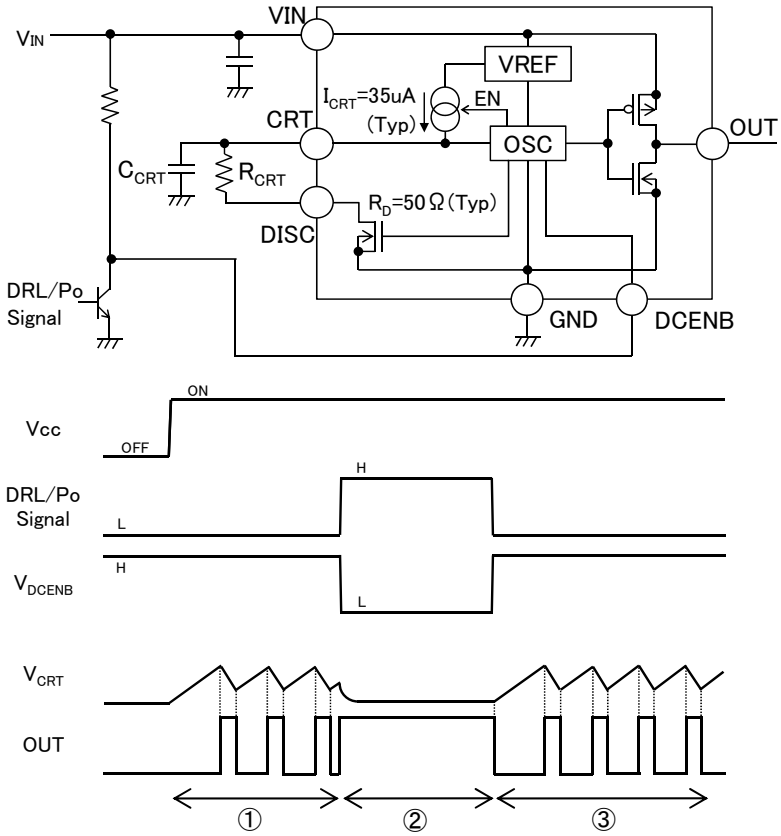

Figure 15. Recommended Application Circuit and Timing Chart

① If V_{IN} is switched ON and DCENB voltage is "H" (V_{DCENB}≧4.4V), V_{CRT} will start oscillation, and according to its waveform rectangular wave is output by OUT.
② If DCENB voltage is "L"(V_{DCENB}≦3.6V), OUT will be fixed at "H"(ON Duty=100%)
③ And DCENB voltage is "H", oscillation will start again.

© 2014 ROHM Co., Ltd. All rights reserved.

Downloaded from Arrow.com.

Operational Notes

1. **Reverse Connection of Power Supply**
   Connecting the power supply in reverse polarity can damage the IC. Take precautions against reverse polarity when connecting the power supply, such as mounting an external diode between the power supply and the IC's power supply pins.

2. **Power Supply Lines**
   Design the PCB layout pattern to provide low impedance supply lines. Furthermore, connect a capacitor to ground at all power supply pins. Consider the effect of temperature and aging on the capacitance value when using electrolytic capacitors.

3. **Ground Voltage**
   Ensure that no pins are at a voltage below that of the ground pin at any time, even during transient condition.

4. **Ground Wiring Pattern**
   When using both small-signal and large-current ground traces, the two ground traces should be routed separately but connected to a single ground at the reference point of the application board to avoid fluctuations in the small-signal ground caused by large currents. Also ensure that the ground traces of external components do not cause variations on the ground voltage. The ground lines must be as short and thick as possible to reduce line impedance.

5. **Thermal Consideration**
   Should by any chance the power dissipation rating be exceeded the rise in temperature of the chip may result in deterioration of the properties of the chip. The absolute maximum rating of the Pd stated in this specification is when the IC is mounted on a 70mm x 70mm x 1.6mm glass epoxy board. In case of exceeding this absolute maximum rating, increase the board size and copper area to prevent exceeding the Pd rating.

6. **Recommended Operating Conditions**
   These conditions represent a range within which the expected characteristics of the IC can be approximately obtained. The electrical characteristics are guaranteed under the conditions of each parameter.

7. **Inrush Current**
   When power is first supplied to the IC, it is possible that the internal logic may be unstable and inrush current may flow instantaneously due to the internal powering sequence and delays, especially if the IC has more than one power supply. Therefore, give special consideration to power coupling capacitance, power wiring, width of ground wiring, and routing of connections.

8. **Operation Under Strong Electromagnetic Field**
   Operating the IC in the presence of a strong electromagnetic field may cause the IC to malfunction.

9. **Testing on Application Boards**
   When testing the IC on an application board, connecting a capacitor directly to a low-impedance output pin may subject the IC to stress. Always discharge capacitors completely after each process or step. The IC's power supply should always be turned off completely before connecting or removing it from the test setup during the inspection process. To prevent damage from static discharge, ground the IC during assembly and use similar precautions during transport and storage.

10. **Inter-pin Short and Mounting Errors**
    Ensure that the direction and position are correct when mounting the IC on the PCB. Incorrect mounting may result in damaging the IC. Avoid nearby pins being shorted to each other especially to ground, power supply and output pin. Inter-pin shorts could be due to many reasons such as metal particles, water droplets (in very humid environment) and unintentional solder bridge deposited in between pins during assembly to name a few.

11. **Unused Input Pins**
    Input pins of an IC are often connected to the gate of a MOS transistor. The gate has extremely high impedance and extremely low capacitance. If left unconnected, the electric field from the outside can easily charge it. The small charge acquired in this way is enough to produce a significant effect on the conduction through the transistor and cause unexpected operation of the IC. So unless otherwise specified, unused input pins should be connected to the power supply or ground line.

© 2014 ROHM Co., Ltd. All rights reserved.

Downloaded from Arrow.com.

Operational Notes – continued

12. Regarding the Input Pin of the IC

This monolithic IC contains P+ isolation and P substrate layers between adjacent elements in order to keep them isolated. P-N junctions are formed at the intersection of the P layers with the N layers of other elements, creating a parasitic diode or transistor. For example (refer to figure below):

When GND > Pin A and GND > Pin B, the P-N junction operates as a parasitic diode.
When GND > Pin B, the P-N junction operates as a parasitic transistor.

Parasitic diodes inevitably occur in the structure of the IC. The operation of parasitic diodes can result in mutual interference among circuits, operational faults, or physical damage. Therefore, conditions that cause these diodes to operate, such as applying a voltage lower than the GND voltage to an input pin (and thus to the P substrate) should be avoided.

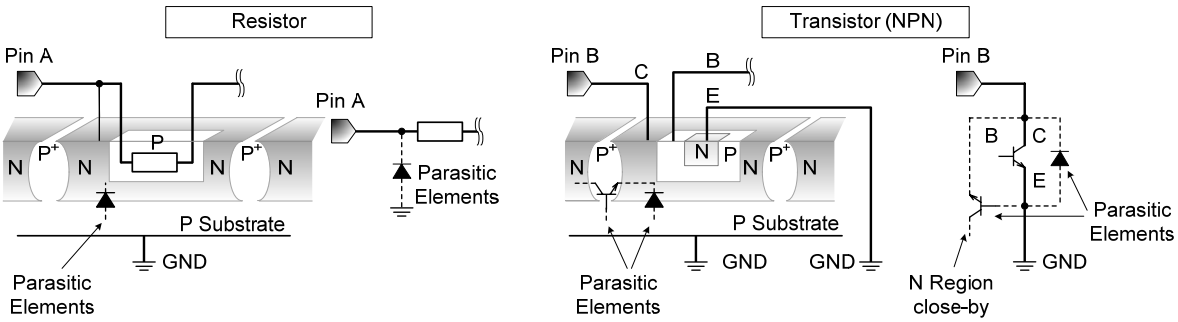

Figure 16. Example of monolithic IC structure

13. Ceramic Capacitor

When using a ceramic capacitor, determine the dielectric constant considering the change of capacitance with temperature and the decrease in nominal capacitance due to DC bias and others.

14. Area of Safe Operation (ASO)

Operate the IC such that the output voltage, output current, and power dissipation are all within the Area of Safe Operation (ASO).

© 2014 ROHM Co., Ltd. All rights reserved.

Downloaded from Arrow.com.

Revision History

Date	Revision	Changes
27.Oct.2014	001	New Release
29.Mar.2016	002	Correction of erroneous description

© 2014 ROHM Co., Ltd. All rights reserved.

Downloaded from Arrow.com.

Notice

Precaution on using ROHM Products

1. If you intend to use our Products in devices requiring extremely high reliability (such as medical equipment (Note 1), aircraft/spacecraft, nuclear power controllers, etc.) and whose malfunction or failure may cause loss of human life, bodily injury or serious damage to property ("Specific Applications"), please consult with the ROHM sales representative in advance. Unless otherwise agreed in writing by ROHM in advance, ROHM shall not be in any way responsible or liable for any damages, expenses or losses incurred by you or third parties arising from the use of any ROHM's Products for Specific Applications.

(Note1) Medical Equipment Classification of the Specific Applications

JAPAN	USA	EU	CHINA
CLASSⅢ	CLASSⅢ	CLASSⅡb	CLASSⅢ
CLASSⅣ		CLASSⅢ	

2. ROHM designs and manufactures its Products subject to strict quality control system. However, semiconductor products can fail or malfunction at a certain rate. Please be sure to implement, at your own responsibilities, adequate safety measures including but not limited to fail-safe design against the physical injury, damage to any property, which a failure or malfunction of our Products may cause. The following are examples of safety measures:
   [a] Installation of protection circuits or other protective devices to improve system safety
   [b] Installation of redundant circuits to reduce the impact of single or multiple circuit failure

3. Our Products are not designed under any special or extraordinary environments or conditions, as exemplified below. Accordingly, ROHM shall not be in any way responsible or liable for any damages, expenses or losses arising from the use of any ROHM's Products under any special or extraordinary environments or conditions. If you intend to use our Products under any special or extraordinary environments or conditions (as exemplified below), your independent verification and confirmation of product performance, reliability, etc, prior to use, must be necessary:
   [a] Use of our Products in any types of liquid, including water, oils, chemicals, and organic solvents
   [b] Use of our Products outdoors or in places where the Products are exposed to direct sunlight or dust
   [c] Use of our Products in places where the Products are exposed to sea wind or corrosive gases, including Cl_2, H_2S, NH_3, SO_2, and NO_2
   [d] Use of our Products in places where the Products are exposed to static electricity or electromagnetic waves
   [e] Use of our Products in proximity to heat-producing components, plastic cords, or other flammable items
   [f] Sealing or coating our Products with resin or other coating materials
   [g] Use of our Products without cleaning residue of flux (even if you use no-clean type fluxes, cleaning residue of flux is recommended); or Washing our Products by using water or water-soluble cleaning agents for cleaning residue after soldering
   [h] Use of the Products in places subject to dew condensation

4. The Products are not subject to radiation-proof design.

5. Please verify and confirm characteristics of the final or mounted products in using the Products.

6. In particular, if a transient load (a large amount of load applied in a short period of time, such as pulse. is applied, confirmation of performance characteristics after on-board mounting is strongly recommended. Avoid applying power exceeding normal rated power; exceeding the power rating under steady-state loading condition may negatively affect product performance and reliability.

7. De-rate Power Dissipation depending on ambient temperature. When used in sealed area, confirm that it is the use in the range that does not exceed the maximum junction temperature.

8. Confirm that operation temperature is within the specified range described in the product specification.

9. ROHM shall not be in any way responsible or liable for failure induced under deviant condition from what is defined in this document.

Precaution for Mounting / Circuit board design

1. When a highly active halogenous (chlorine, bromine, etc.) flux is used, the residue of flux may negatively affect product performance and reliability.

2. In principle, the reflow soldering method must be used on a surface-mount products, the flow soldering method must be used on a through hole mount products. If the flow soldering method is preferred on a surface-mount products, please consult with the ROHM representative in advance.

For details, please refer to ROHM Mounting specification

© 2015 ROHM Co., Ltd. All rights reserved.

Downloaded from Arrow.com.

Precautions Regarding Application Examples and External Circuits

1. If change is made to the constant of an external circuit, please allow a sufficient margin considering variations of the characteristics of the Products and external components, including transient characteristics, as well as static characteristics.

2. You agree that application notes, reference designs, and associated data and information contained in this document are presented only as guidance for Products use. Therefore, in case you use such information, you are solely responsible for it and you must exercise your own independent verification and judgment in the use of such information contained in this document. ROHM shall not be in any way responsible or liable for any damages, expenses or losses incurred by you or third parties arising from the use of such information.

Precaution for Electrostatic

This Product is electrostatic sensitive product, which may be damaged due to electrostatic discharge. Please take proper caution in your manufacturing process and storage so that voltage exceeding the Products maximum rating will not be applied to Products. Please take special care under dry condition (e.g. Grounding of human body / equipment / solder iron, isolation from charged objects, setting of Ionizer, friction prevention and temperature / humidity control).

Precaution for Storage / Transportation

1. Product performance and soldered connections may deteriorate if the Products are stored in the places where:
   [a] the Products are exposed to sea winds or corrosive gases, including Cl2, H2S, NH3, SO2, and NO2
   [b] the temperature or humidity exceeds those recommended by ROHM
   [c] the Products are exposed to direct sunshine or condensation
   [d] the Products are exposed to high Electrostatic

2. Even under ROHM recommended storage condition, solderability of products out of recommended storage time period may be degraded. It is strongly recommended to confirm solderability before using Products of which storage time is exceeding the recommended storage time period.

3. Store / transport cartons in the correct direction, which is indicated on a carton with a symbol. Otherwise bent leads may occur due to excessive stress applied when dropping of a carton.

4. Use Products within the specified time after opening a humidity barrier bag. Baking is required before using Products of which storage time is exceeding the recommended storage time period.

Precaution for Product Label

A two-dimensional barcode printed on ROHM Products label is for ROHM's internal use only.

Precaution for Disposition

When disposing Products please dispose them properly using an authorized industry waste company.

Precaution for Foreign Exchange and Foreign Trade act

Since concerned goods might be fallen under listed items of export control prescribed by Foreign exchange and Foreign trade act, please consult with ROHM in case of export.

Precaution Regarding Intellectual Property Rights

1. All information and data including but not limited to application example contained in this document is for reference only. ROHM does not warrant that foregoing information or data will not infringe any intellectual property rights or any other rights of any third party regarding such information or data.

2. ROHM shall not have any obligations where the claims, actions or demands arising from the combination of the Products with other articles such as components, circuits, systems or external equipment (including software).

3. No license, expressly or implied, is granted hereby under any intellectual property rights or other rights of ROHM or any third parties with respect to the Products or the information contained in this document. Provided, however, that ROHM will not assert its intellectual property rights or other rights against you or your customers to the extent necessary to manufacture or sell products containing the Products, subject to the terms and conditions herein.

Other Precaution

1. This document may not be reprinted or reproduced, in whole or in part, without prior written consent of ROHM.

2. The Products may not be disassembled, converted, modified, reproduced or otherwise changed without prior written consent of ROHM.

3. In no event shall you use in any way whatsoever the Products and the related technical information contained in the Products or this document for any military purposes, including but not limited to, the development of mass-destruction weapons.

4. The proper names of companies or products described in this document are trademarks or registered trademarks of ROHM, its affiliated companies or third parties.

© 2015 ROHM Co., Ltd. All rights reserved.

Downloaded from Arrow.com.

General Precaution

1. Before you use our Products, you are requested to carefully read this document and fully understand its contents. ROHM shall not be in any way responsible or liable for failure, malfunction or accident arising from the use of any ROHM's Products against warning, caution or note contained in this document.

2. All information contained in this document is current as of the issuing date and subject to change without any prior notice. Before purchasing or using ROHM's Products, please confirm the latest information with a ROHM sales representative.

3. The information contained in this document is provided on an "as is" basis and ROHM does not warrant that all information contained in this document is accurate and/or error-free. ROHM shall not be in any way responsible or liable for any damages, expenses or losses incurred by you or third parties resulting from inaccuracy or errors of or concerning such information.

© 2015 ROHM Co., Ltd. All rights reserved.

Downloaded from Arrow.com.