Panasonic
INDUSTRY

Power Relays (Over 2 A)

HE RELAYS

Product Catalog

IN Your
Future

2026.7

Downloaded from Arrow.com.

Power Relays (Over 2 A)

HE RELAYS

TV-10/TV-15 rated, 1 Form A 30 A, 2 Form A 25 A, Power relays

Protective construction
- Dust cover type：Plug-in, TM and Screw terminal types
- Flux-resistant type：PC board type

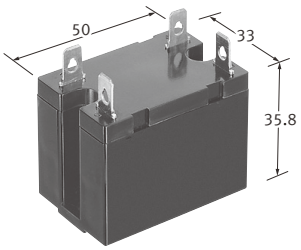

1 Form A Plug-in type

(Unit：mm)

FEATURES

- High capacity: 30 A (1 Form A) , 25 A (2 Form A)
- TV standard approved: TV-15 (1 Form A) , TV-10 (2 Form A)
- Surge withstand voltage: 10,000 V (between contact and coil)
- Terminal sockets are available

TYPICAL APPLICATIONS

- Office equipment
- Industrial equipment
- Home appliances

ORDERING INFORMATION (PART NO. : Ordering part number for Japanese market)

AHE ☐ ☐ ☐ ☐

- Contact arrangement
  1：1 Form A(Single side stable)
  2：2 Form A(Single side stable)
- Operate voltage
  2：70%of Rated voltage
- Terminal shape
  1：Plug-in type(DC)
  2：TM type(DC)
  3：Screw terminal type(DC)
  5：Plug-in type(AC)
  6：TM type(AC)
  7：Screw terminal type(AC)
  9：PC board type(DC)
- Rated coil voltage

Part Number	0	1	2	3	4	5	6
V DC	6	12	24	48	100	—	110
V AC	—	12	24	48	100/120	200/240	—

ORDERING INFORMATION (TYPE NO. : Ordering part number for non Japanese market)

HE ☐ ☐-☐-☐

- Contact arrangement
  1a：1 Form A(Single side stable)
  2a：2 Form A(Single side stable)
- Operate voltage
  N：70%of Rated voltage
- Terminal shape
  Nil：Plug-in type
  S：Screw terminal type
  Q：TM type
  P：PC board type
- Rated coil voltage
  DC：6, 12, 24, 48, 100, 110V
  AC：12, 24, 48, 100(100/120), 200(200/240)V

CLASSIFICATION

Item		PC board terminal	Plug-in terminal		TM type		Screw terminal	
Operational function		Single side stable						
Contact arrangement		1 Form A	1 Form A	2 Form A	1 Form A	2 Form A	1 Form A	2 Form A
Insulation gap		Min. 8 mm						
Distance between contacts (Reference value)		Min. 2.5 mm	Min. 3 mm					
Dielectric strength (initial)	Between open contacts	2,000 V rms for 1 min						
	Between contact and coil	5,000 V rms for 1 min						

©Panasonic Industry Co., Ltd. 2026

Downloaded from Arrow.com.

TYPES

" Type No. " is ordering part number for non Japanese market. " Part No. " is ordering part number for Japanese market.

■ DC PC board terminal

Rated coil voltage	1 Form A		Standard packing	
	Type No.	Part No.	Inner carton	Outer carton
6 V DC	HE1aN-P-DC6V	AHE1290	25 pcs.	100 pcs.
12 V DC	HE1aN-P-DC12V	AHE1291		
24 V DC	HE1aN-P-DC24V	AHE1292		
48 V DC	HE1aN-P-DC48V	AHE1293		
100 V DC	HE1aN-P-DC100V	AHE1294		
110 V DC	HE1aN-P-DC110V	AHE1296		

■ Plug-in terminal

Type	Rated coil voltage	1 Form A		2 Form A		Standard packing	
		Type No.	Part No.	Type No.	Part No.	Inner carton	Outer carton
DC type	6 V DC	HE1aN-DC6V	AHE1210	HE2aN-DC6V	AHE2210	20 pcs.	100 pcs.
	12 V DC	HE1aN-DC12V	AHE1211	HE2aN-DC12V	AHE2211		
	24 V DC	HE1aN-DC24V	AHE1212	HE2aN-DC24V	AHE2212		
	48 V DC	HE1aN-DC48V	AHE1213	HE2aN-DC48V	AHE2213		
	100 V DC	HE1aN-DC100V	AHE1214	HE2aN-DC100V	AHE2214		
	110 V DC	HE1aN-DC110V	AHE1216	HE2aN-DC110V	AHE2216		
AC type	12 V AC	HE1aN-AC12V	AHE1251	HE2aN-AC12V	AHE2251		
	24 V AC	HE1aN-AC24V	AHE1252	HE2aN-AC24V	AHE2252		
	48 V AC	HE1aN-AC48V	AHE1253	HE2aN-AC48V	AHE2253		
	100/120 V AC	HE1aN-AC100V	AHE1254	HE2aN-AC100V	AHE2254		
	200/240 V AC	HE1aN-AC200V	AHE1255	HE2aN-AC200V	AHE2255		

■ TM type

Type	Rated coil voltage	1 Form A		2 Form A		Standard packing	
		Type No.	Part No.	Type No.	Part No.	Inner carton	Outer carton
DC type	6 V DC	HE1aN-Q-DC6V	AHE1220	HE2aN-Q-DC6V	AHE2220	20 pcs.	100 pcs.
	12 V DC	HE1aN-Q-DC12V	AHE1221	HE2aN-Q-DC12V	AHE2221		
	24 V DC	HE1aN-Q-DC24V	AHE1222	HE2aN-Q-DC24V	AHE2222		
	48 V DC	HE1aN-Q-DC48V	AHE1223	HE2aN-Q-DC48V	AHE2223		
	100 V DC	HE1aN-Q-DC100V	AHE1224	HE2aN-Q-DC100V	AHE2224		
	110 V DC	HE1aN-Q-DC110V	AHE1226	HE2aN-Q-DC110V	AHE2226		
AC type	12 V AC	HE1aN-Q-AC12V	AHE1261	HE2aN-Q-AC12V	AHE2261		
	24 V AC	HE1aN-Q-AC24V	AHE1262	HE2aN-Q-AC24V	AHE2262		
	48 V AC	HE1aN-Q-AC48V	AHE1263	HE2aN-Q-AC48V	AHE2263		
	100/120 V AC	HE1aN-Q-AC100V	AHE1264	HE2aN-Q-AC100V	AHE2264		
	200/240 V AC	HE1aN-Q-AC200V	AHE1265	HE2aN-Q-AC200V	AHE2265		

■ Screw terminal

Type	Rated coil voltage	1 Form A		2 Form A		Standard packing	
		Type No.	Part No.	Type No.	Part No.	Inner carton	Outer carton
DC type	6 V DC	HE1aN-S-DC6V	AHE1230	HE2aN-S-DC6V	AHE2230	10 pcs.	50 pcs.
	12 V DC	HE1aN-S-DC12V	AHE1231	HE2aN-S-DC12V	AHE2231		
	24 V DC	HE1aN-S-DC24V	AHE1232	HE2aN-S-DC24V	AHE2232		
	48 V DC	HE1aN-S-DC48V	AHE1233	HE2aN-S-DC48V	AHE2233		
	100 V DC	HE1aN-S-DC100V	AHE1234	HE2aN-S-DC100V	AHE2234		
	110 V DC	HE1aN-S-DC110V	AHE1236	HE2aN-S-DC110V	AHE2236		
AC type	12 V AC	HE1aN-S-AC12V	AHE1271	HE2aN-S-AC12V	AHE2271		
	24 V AC	HE1aN-S-AC24V	AHE1272	HE2aN-S-AC24V	AHE2272		
	48 V AC	HE1aN-S-AC48V	AHE1273	HE2aN-S-AC48V	AHE2273		
	100/120 V AC	HE1aN-S-AC100V	AHE1274	HE2aN-S-AC100V	AHE2274		
	200/240 V AC	HE1aN-S-AC200V	AHE1275	HE2aN-S-AC200V	AHE2275		

For the terminal sockets, please refer to the " HE RELAYS Terminal sockets ".

©Panasonic Industry Co., Ltd. 2026

Downloaded from Arrow.com.

RATING

■ Coil data

- Operating characteristics such as " Operate voltage " and " Release voltage " are influenced by mounting conditions or ambient temperature, etc.
  Therefore, please use the relay within ±5 % of rated coil voltage.
- " Initial " means the condition of products at the time of delivery.

● AC type

Rated coil voltage	Operate voltage* (at 20 ℃)	Release voltage* (at 20 ℃)	Rated operating current (±10 %, at 20 ℃)	Rated operating power	Max. allowable voltage (at 20 ℃)
12 V AC	Max. 70 % V of rated coil voltage (Initial)	Min. 15 % V of rated coil voltage (Initial)	138 mA	1.7 VA	110 % V of rated coil voltage
24 V AC			74 mA	1.8 VA	
48 V AC			39 mA	1.9 VA	
100/120 V AC	Max. 70 V AC (Initial)	Min.18 V AC (Initial)	18.7 to 22.1 mA	1.9 to 2.7 VA	132 V AC
200/240 V AC	Max. 140 V AC (Initial)	Min. 36 V AC (Initial)	9.1 to 10.8 mA	1.8 to 2.6 VA	264 V AC

* Square, pulse drive

● DC type

Rated coil voltage	Operate voltage* (at 20 ℃)	Release voltage* (at 20 ℃)	Rated operating current (±10 %, at 20 ℃)	Coil resistance (±10 %, at 20 ℃)	Rated operating power	Max. allowable voltage (at 55 ℃)
6 V DC	Max. 70 % V of rated coil voltage (Initial)	Min. 10 % V of rated coil voltage (Initial)	320 mA	18.8 Ω	1,920 mW	110 % V of rated coil voltage
12 V DC			160 mA	75 Ω		
24 V DC			80 mA	300 Ω		
48 V DC			40 mA	1,200 Ω		
100 V DC			19 mA	5,200 Ω		
110 V DC			18 mA	6,300 Ω		

* Square, pulse drive

©Panasonic Industry Co., Ltd. 2026

Downloaded from Arrow.com.

■ Specifications

Item		Specifications	
Contact data	Contact arrangement	1 Form A	2 Form A
	Contact resistance (initial)	Max. 100 mΩ (by voltage drop 6 V DC 1 A)	
	Contact material	$AgSnO_2$ type	
	Contact rating (resistive)	30 A 277 V AC	25 A 277 V AC
	Max. switching power (resistive)	8,310 VA	6,925 VA
	Max. switching voltage	277 V AC	
	Max. switching current	30 A (AC)	25 A (AC)
	Min. switching load (reference value) *1	100 mA 5 V DC	
Insulation resistance (initial)		Min. 1,000 MΩ (at 500 V DC, Measured portion is the same as the case of dielectric strength.)	
Dielectric strength (initial)	Between open contacts	2,000 V rms for 1 min (detection current: 10 mA)	
	Between contact sets	—	4,000 V rms for 1 min (detection current: 10 mA)
	Between contact and coil	5,000 V rms for 1 min (detection current: 10 mA)	
Surge withstand voltage (initial) *2	Between contact and coil	10,000 V	
Time characteristics (initial)	Operate time	Max. 30 ms at rated coil voltage (at 20 ℃, without bounce)	
	Release time	DC: Max. 10 ms at rated coil voltage (at 20 ℃, without bounce, without diode) AC: Max. 30 ms at rated coil voltage (at 20 ℃, without bounce)	
Shock resistance	Functional	98 m/s^2 (half-sine shock pulse: 11 ms, detection time: 10 μs)	
	Destructive	980 m/s^2 (half-sine shock pulse: 6 ms)	
Vibration resistance	Functional	10 to 55 Hz (at double amplitude of 1 mm, detection time: 10 μs)	
	Destructive	10 to 55 Hz (at double amplitude of 1.5 mm)	
Expected life	Mechanical life	Please contact our sales representative.	
Conditions	Conditions for usage, transport and storage*3	Temperature: −50 to +55 ℃, Humidity: 5 to 85 % RH (Avoid icing and condensation)	
Unit weight		PC board terminal: Approx. 80 g, Plug-in terminal and TM type: Approx. 90 g, Screw terminal: Approx. 120 g	

*1: This value can change due to the switching frequency, environmental conditions, and desired reliability level, therefore it is recommended to check this with the actual load.
*2: Wave is standard shock voltage of ±1.2 × 50 μs.
*3: For ambient temperature, please read " GUIDELINES FOR RELAY USAGE ".

■ Expected electrical life

Conditions: Resistive load, switching frequency at 20 times/min

Type	Switching capacity	Number of operations
1 Form A	30 A 250 V AC	Min. 200 × 10^3 ope.
2 Form A	20 A 250 V AC	Min. 200 × 10^3 ope.

©Panasonic Industry Co., Ltd. 2026

Downloaded from Arrow.com.

REFERENCE DATA

■ 1 Form A

1. Max. switching capacity

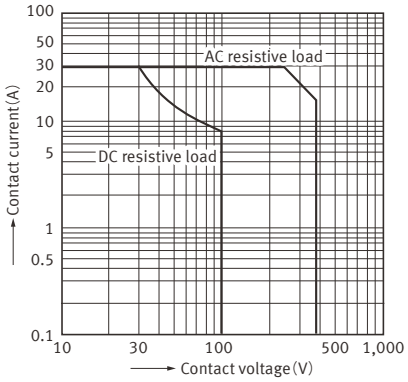

2. Switching life curve

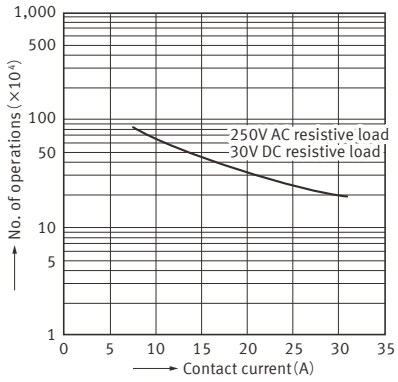

3. Coil temperature characteristics (DC type)

Measured portion : Coil inside
Contact current : 30A

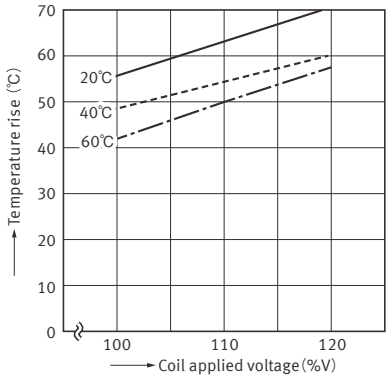

4. Ambient temperature characteristics (Average)

Tested sample : HE1aN-120V AC, 6pcs.

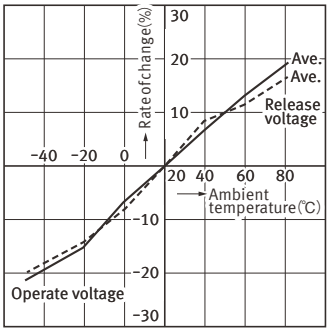

■ 2 Form A

1. Max. switching capacity

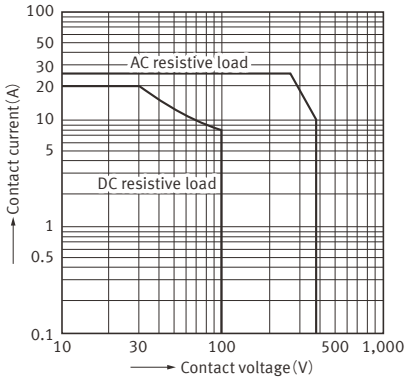

2. Switching life curve

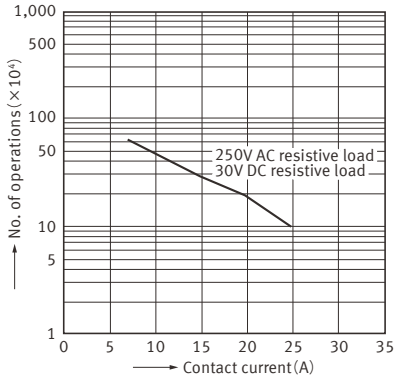

3. Coil temperature characteristics (DC type)

Measured portion : Coil inside
Contact current : 25A

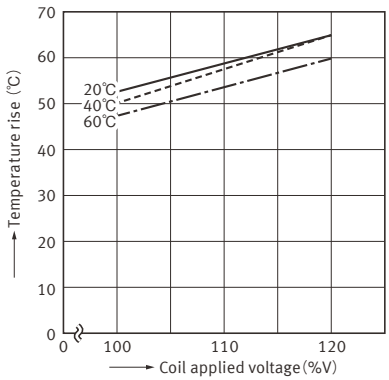

©Panasonic Industry Co., Ltd. 2026

Downloaded from Arrow.com.

4. Ambient temperature characteristics
(Average)

Tested sample : HE2aN-120V AC, 6 pcs.

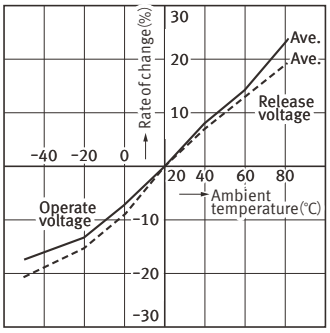

DIMENSIONS (Unit: mm)

CAD The CAD data of the products with a " CAD " mark can be downloaded from our Website.

■ PC board terminal

● 1 Form A

CAD

External dimensions

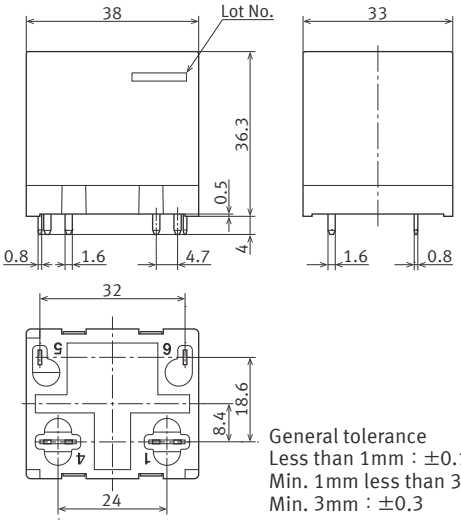

General tolerance
Less than 1mm : ±0.1
Min. 1mm less than 3mm : ±0.2
Min. 3mm : ±0.3

Recommended
PC board pattern
(BOTTOM VIEW)

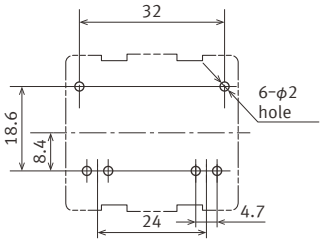

Tolerance ±0.1

Schematic
(BOTTOM VIEW)

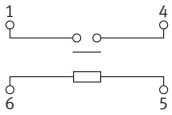

©Panasonic Industry Co., Ltd. 2026

Downloaded from Arrow.com.

■ Plug-in terminal

● 1 Form A

CAD

External dimensions

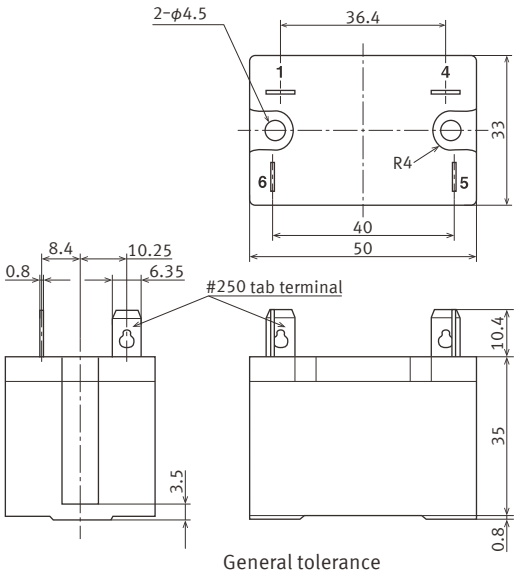

General tolerance
Less than 1mm : ±0.1
Min. 1mm less than 3mm : ±0.2
Min. 3mm : ±0.3

Mounting hole pattern

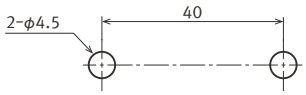

Tolerance ±0.1

Schematic
(BOTTOM VIEW)

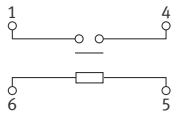

● 2 Form A

CAD

External dimensions

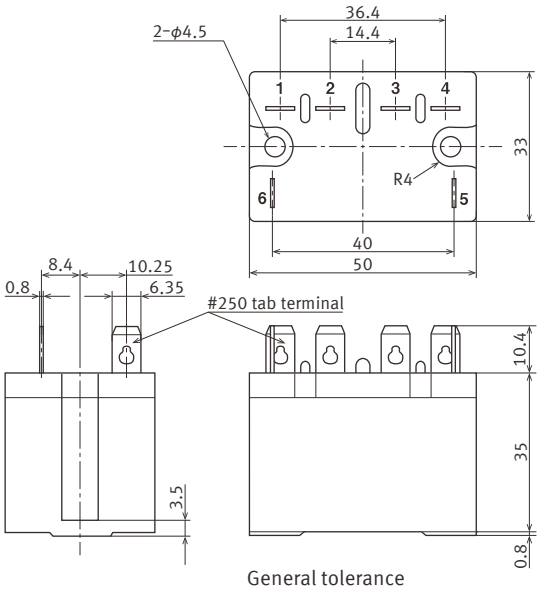

General tolerance
Less than 1mm : ±0.1
Min. 1mm less than 3mm : ±0.2
Min. 3mm : ±0.3

Mounting hole pattern

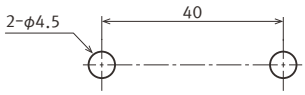

Tolerance ±0.1

Schematic
(BOTTOM VIEW)

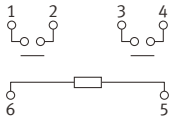

©Panasonic Industry Co., Ltd. 2026

Downloaded from Arrow.com.

■ TM type

● 1 Form A

CAD

External dimensions

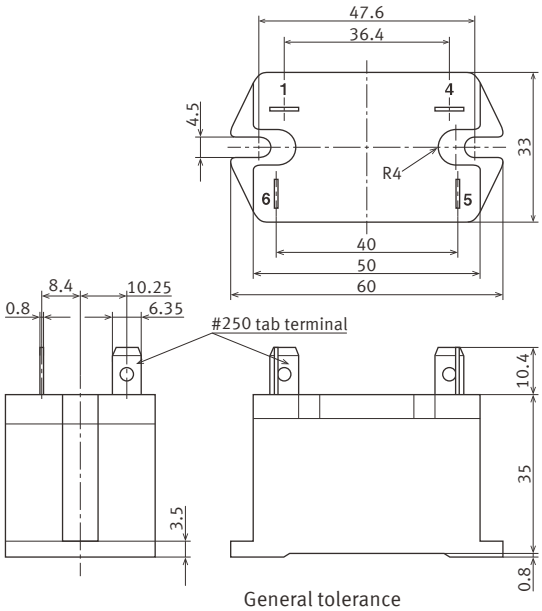

General tolerance
Less than 1mm : ±0.1
Min. 1mm less than 3mm : ±0.2
Min. 3mm : ±0.3

Mounting hole pattern

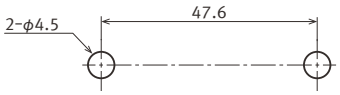

Tolerance ±0.1

Schematic
(BOTTOM VIEW)

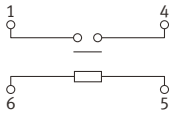

● 2 Form A

CAD

External dimensions

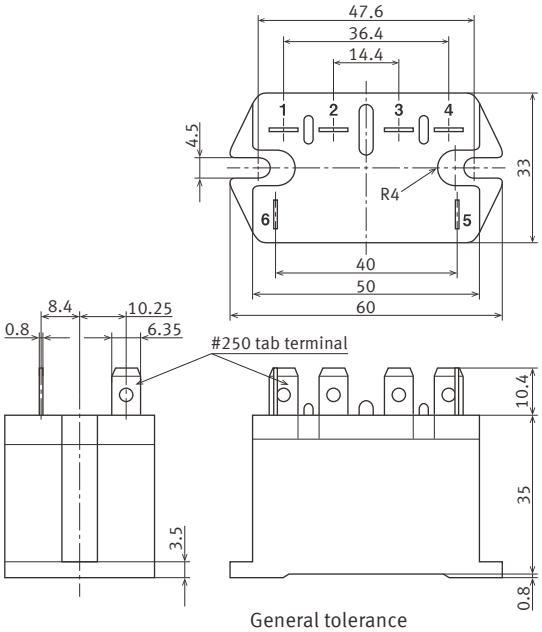

General tolerance
Less than 1mm : ±0.1
Min. 1mm less than 3mm : ±0.2
Min. 3mm : ±0.3

Mounting hole pattern

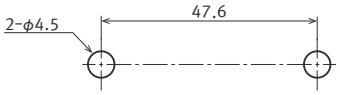

Tolerance ±0.1

Schematic
(BOTTOM VIEW)

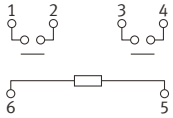

©Panasonic Industry Co., Ltd. 2026

Downloaded from Arrow.com.

■ Screw terminal

● 1 Form A

For details please contact our sales representative.

External dimensions

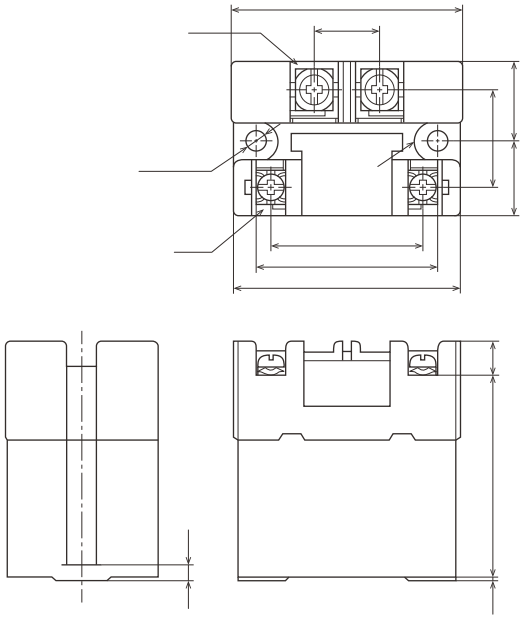

Mounting hole pattern

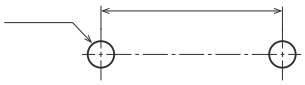

Schematic
(BOTTOM VIEW)

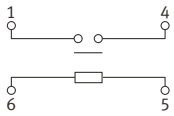

● 2 Form A

For details please contact our sales representative.

External dimensions

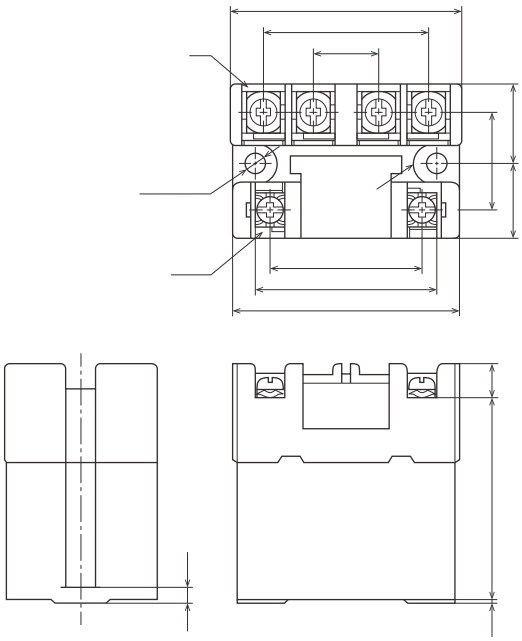

Mounting hole pattern

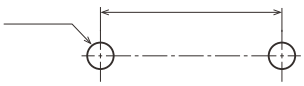

Schematic
(BOTTOM VIEW)

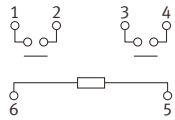

©Panasonic Industry Co., Ltd. 2026

Downloaded from Arrow.com.

MOUNTING METHOD

■ Plug-in terminal

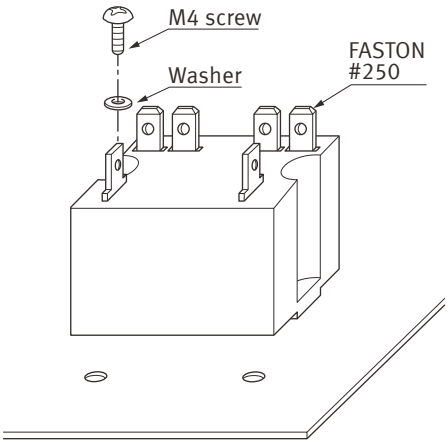

■ Screw terminal

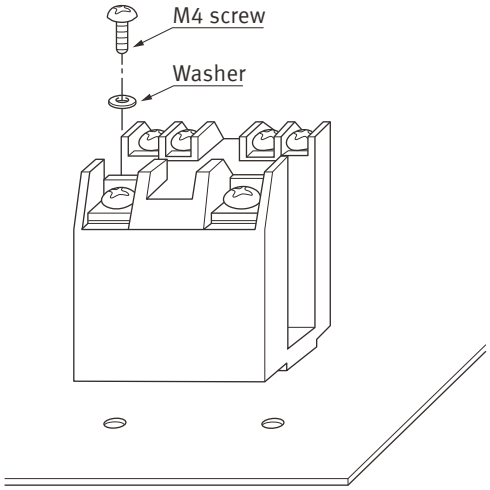

Due to the UP terminals, it is possible to either directly connect the wires or use crimped terminal.

©Panasonic Industry Co., Ltd. 2026

Downloaded from Arrow.com.

SAFETY STANDARDS

Each standard may be updated at any time, so please check our Website for the latest information.

■ UL (Approved)

1 Form A

File No.	Contact rating	Operations
E43028	30 A 277 V AC	100 × 10^3
	30 A 30 V DC	100 × 10^3
	3 HP 250 V AC	100 × 10^3
	1.5 HP 125 V AC	100 × 10^3

2 Form A

File No.	Contact rating	Operations
E43028	25 A 277 V AC	100 × 10^3
	25 A 30 V DC	100 × 10^3
	3 HP 277 V AC	30 × 10^3
	2 HP 250 V AC	100 × 10^3
	1.5 HP 120 V AC	30 × 10^3
	1 HP 125 V AC	100 × 10^3

■ VDE (Approved)

1 Form A

File No.	Contact rating
40006681	30 A 250 V AC (cosϕ = 1.0)
	30 A 250 V AC (cosϕ = 0.4)
	8 A 110 V DC (0 ms)

2 Form A Plug-in terminal and TM type

File No.	Contact rating
40006681	25 A 250 V AC (cosϕ = 1.0)
	25 A 250 V AC (cosϕ = 0.4)
	8 A 110 V DC (0 ms)

2 Form A Screw terminal

File No.	Contact rating
40006681	25 A 250 V AC (cosϕ = 1.0)
	30 A 250 V AC (cosϕ = 0.4)
	8 A 110 V DC (0 ms)

■ TV rating

1 Form A

File No.	Contact rating
UL: E43028	TV-15

2 Form A

File No.	Contact rating
UL: E43028	TV-10

■ CSA (Approved)

1 Form A

File No.	Contact rating	Operations
1011904	30 A 277 V AC	100 × 10^3
	30 A 30 V DC	100 × 10^3
	3 HP 250 V AC	100 × 10^3
	1.5 HP 125 V AC	100 × 10^3

2 Form A

File No.	Contact rating	Operations
1011904	25 A 277 V AC	100 × 10^3
	25 A 30 V DC	100 × 10^3
	2 HP 250 V AC	100 × 10^3
	1 HP 125 V AC	100 × 10^3

©Panasonic Industry Co., Ltd. 2026

Downloaded from Arrow.com.

INSULATION CHARACTERISTICS (IEC61810-1)

Item	Characteristics
Clearance/Creepage distance (IEC61810-1)	Min. 5.5/8.0 mm
Category of protection (IEC61810-1)	RT I (Plug-in terminal, TM type and Screw terminal), RT II (PC board terminal)
Tracking resistance (IEC60112)	PTI 175
Insulation material group	III a
Over voltage category	III
Rated voltage	250 V
Pollution degree	3
Type of insulation (Between contact and coil)	Reinforced insulation
Type of insulation (Between open contact)	Full disconnection

* Actual value

GUIDELINES FOR USAGE

■ For cautions for use, please read " GUIDELINES FOR RELAY USAGE ".
https://industry.panasonic.com/global/en/products/control/relay/cautions_use

■ Cautions for usage of HE relays

● **PC board mounting (Plug-in terminal, TM type and Screw terminal)**
When attaching to the board, M4 screws and washers to prevent deformation. The optimum tightening torque is in the range of 49 N・cm to 68.6 N・cm (5 kgf ・cm to 7 kgf ・cm). Use a spring washer to prevent loosening.

● **Insertion and Removal of the Receptacle (Plug-in Terminal, TM Type)**
Firmly insert the receptacles so that there is no slack or looseness. To remove a receptacle, 19.6 to 39.2 N (2 to 4 kg) of pulling strength is required. Do not remove more than one receptacle at one time. Always remove one receptacle at a time and pull it straight outwards.

● **Tightening torque for the push screw block (Screw terminal type only)**
To prevent damage and deformity, please use torque within the following range when tightening the push screw block of the terminal socket.

Contact arrangement	Terminal No.	Screw	Tightening torque
1 Form A	1･4	M4.5	147.0 to 166.6 N･cm (15 to 17 kgf･cm)
	5･6	M3.5	78.4 to 98.9 N･cm (8 to 10 kgf･cm)
2 Form A	1･2･3･4	M4	117.6 to 137.0 N･cm (12 to 14 kgf･cm)
	5･6	M3.5	78.4 to 98.9 N･cm (8 to 10 kgf･cm)

● **DC load guidelines**
In case the relay is used as a DC high voltage switch, the final failure mode may be uninterruptible. In the event that the power supply cannot be cut off, in the worst case, the fire may spread to the surrounding area. Therefore, configure the power supply so that it can be turned off within one second. Also, consider a fail-safe circuit for your equipment.

©Panasonic Industry Co., Ltd. 2026

Downloaded from Arrow.com.

● **Coil surge absorber**

Please use a Varistor (ZNR) or Zener diode (ZD) which the clamp voltage is at least 1.5 times larger than the rated voltage for the purpose of the coil surge absorber. If the clamp voltage is less than 1.5 times larger than the rated voltage, electrical life of the relay specified in the specifications shall not be secured because the contact release speed becomes slower.

[Example 1: When Varistor (ZNR) is use]

Recommended Varistor	Energy capability: Min. 1 J (However, please set up the value with consideration of the worst value in use condition.)
Varistor Voltage	Min. 150 % of rated voltage (Recommended Varistor voltage is at 18 V or more when the coil rated voltage is at 12 V.)

[Example 2: When Zener diode (circuit) is use]
(Set the clamp voltage at 18 V or more when the coil 1 rated voltage is at 12 V.)

[1]

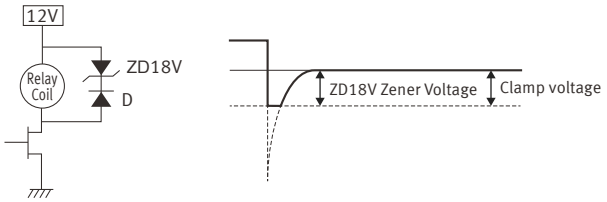

[2]

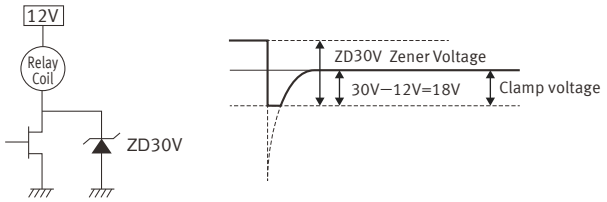

When diodes are used, and for AC-type applications, the contact opening speed is slow and the breaking performance is degraded.
When using an inductive load (L load) with L/R > 1 ms, take measures against surge absorption in parallel with the inductive load.

● **About parallel relay connections**

When multiple relays are connected in parallel, design the equipment so that the load applied to each relay is within the specified range.
(Concentration of load on one relay leads to early failure.)

● **About connecting multiple relays**

When connecting multiple relays or when there is heat received from other equipment, heat dissipation may be insufficient and the ambient temperature of the relay may be exceeded. After checking the temperature in the actual device, please design the circuit with sufficient thermal margin.

● **About conductor cross-sectional area during mounting**

When designing a printed circuit board, ensure that there is sufficient margin in the conductor width and conductor spacing. To reduce the temperature rise, refer to the cross-sectional area of the conductor of UL 508.

<UL508 18th Edition: Table 43.2>

Max. Current	Copper wire	
	Conductor size	Wire size
(A)	(mm^2)	(AWG)
10	1.3	16
15	2.1	14
20	3.3	12
30	5.3	10

● **Ambient Atmosphere**

If the relay is used or stored in an atmosphere of corrosive gas (Sulfurous acid gas: SO_2, hydrogen sulfide gas: H_2S) , corrosive gas components may adhere to the contacts, resulting in contact failure. Do not use or store the relay in such an atmosphere.

©Panasonic Industry Co., Ltd. 2026

Downloaded from Arrow.com.

HE RELAYS Terminal sockets

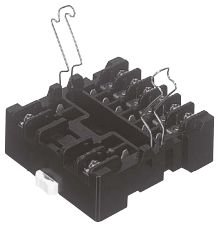

TYPES

Product name	Type No.	Part No.	Standard packing	
			Inner carton	Outer carton
1 Form A	JH1-SF	AR58102	10 pcs.	50 pcs.
2 Form A	JH2-SF	AR58202		

RATING

Item	Specifications	
Contact arrangement	1 Form A	2 Form A
Dielectric strength (initial)	Each between terminals: 2,000 V rms for 1 min (detection current: 10 mA) Between contacts − coil side: 5,000 V rms for 1 min (detection current: 10 mA)	
Insulation resistance (initial)	Each between terminals: Min. 100 MΩ (at 500 V DC, Measured portion is the same as the case of dielectric strength.)	
Maximum carrying current	30 A 250 V AC	20 A 250 V AC
Conditions for usage, transport and storage	Ambient temperature: −50 to +55 ℃ Humidity: 5 to 85 % RH (Avoid icing and condensation)	

DIMENSIONS (Unit: mm)

CAD The CAD data of the products with a " CAD " mark can be downloaded from our Website.

CAD

External dimensions

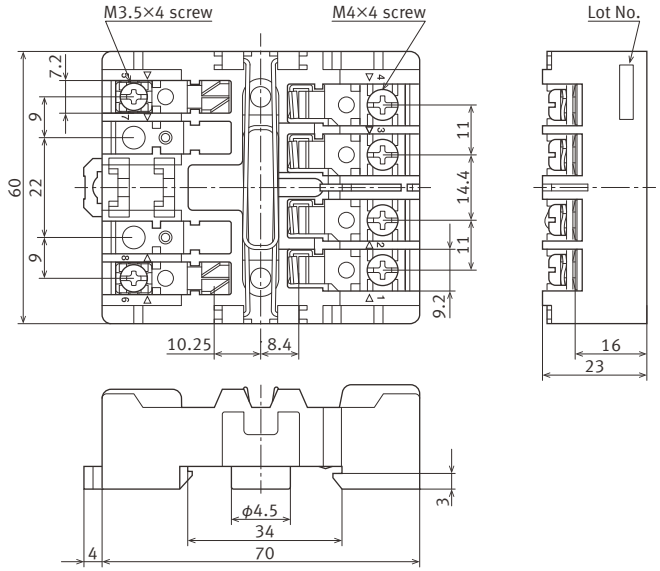

Note) The JH1-SF (1 Form A single side stable) does not have receptacles (tooth rests) for numbers 2, 3, 7, and 8. The JH2-SF (2 Form A single side stable) does not have receptacles (tooth rests) for numbers 7 and 8.

Panel cutout

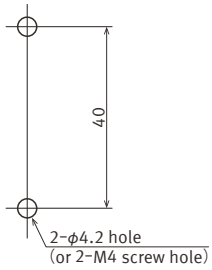

Relay mounting diagram

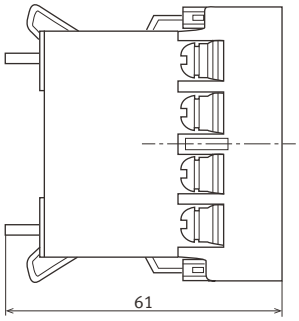

©Panasonic Industry Co., Ltd. 2026

Downloaded from Arrow.com.

HANDLING

■ Mounting method of relay

1) Match the direction of relay and terminal socket.

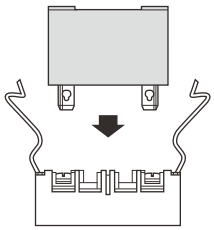

2) Insert both ends of the relay firmly, all the way in.

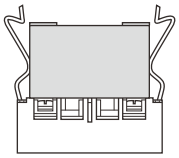

3) Press the hooks in the direction of the arrows to attach the relay securely.

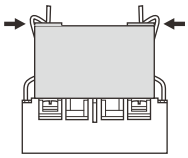

■ Removing method of relay

Pull out the relay after fully releasing both hooks

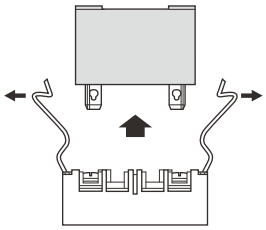

■ Mounting to a DIN rail and Removing from a DIN rail

- Please use a DIN Standard rail of the 35 mm width (DIN46277 and IEC60715) .
- Mounting and removing methods will be as follows.

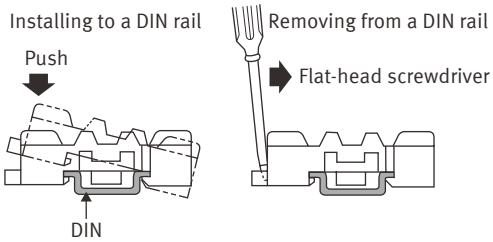

GUIDELINES FOR USAGE

- Be sure to tighten the screw-down terminals firmly. Loose terminals may lead to the generation of heat.
- When the 1 Form A is used in situations covered by the Japanese Electrical Appliance and Material Control Law, the use of 5.5 mm^2 cabling and 30 A current is not allowed. Consequently, the circuit should be less than 20 A.
- When fixing the terminal socket with screws, to avoid torque damage and distortion, apply torque within the ranges shown below.

M3.5 screw	0.784 to 0.98 N·m (8 to 10 kgf·cm)
M4 screw	1.176 to 1.37 N·m (12 to 14 kgf·cm)

©Panasonic Industry Co., Ltd. 2026

Downloaded from Arrow.com.

■ For cautions for use, please read " GUIDELINES FOR RELAY USAGE ".
https://industry.panasonic.com/global/en/products/control/relay/cautions_use

Precautions for Coil Input

■ Long term current carrying

A circuit that will be carrying a current continuously for long periods without relay switching operation. (circuits for emergency lamps, alarm devices and error inspection that, for example, revert only during malfunction and output warnings with form B contacts) Continuous, long-term current to the coil will facilitate deterioration of coil insulation and characteristics due to heating of the coil itself. For circuits such as these, please use a magnetic-hold type latching relay. If you need to use a single stable relay, use a sealed type relay that is not easily affected by ambient conditions and make a failsafe circuit design that considers the possibility of contact failure or disconnection.

■ DC Coil operating power

Steady state DC current should be applied to the coil. The wave form should be rectangular. If it includes ripple, the ripple factor should be less than 5 %.
However, please check with the actual circuit since the electrical characteristics may vary. The rated coil voltage should be applied to the coil and the set/reset pulse time of latching type relay differs for each relays, please refer to the relay's individual specifications.

■ Coil connection

When connecting coils of polarized relays, please check coil polarity (＋, －) at the internal connection diagram (Schematic). If any wrong connection is made, it may cause unexpected malfunction, like abnormal heat, fire and so on, and circuit do not work. Avoid impressing voltages to the set coil and reset coil at the same time.

■ Maximum allowable voltage and temperature rise

Proper usage requires that the rated coil voltage be impressed on the coil. Note, however, that if a voltage greater than or equal to the maximum continuous voltage is impressed on the coil, the coil may burn or its layers short due to the temperature rise. Furthermore, do not exceed the usable ambient temperature range listed in the catalog.

●Operate voltage change due to coil temperature rise
In DC relays, after continuous passage of current in the coil, if the current is turned OFF, then immediately turned ON again, due to the temperature rise in the coil, the operate voltage will become somewhat higher. Also, it will be the same as using it in a higher temperature atmosphere. The resistance/temperature relationship for copper wire is about 0.4 % for 1 ℃, and with this ratio the coil resistance increases. That is, in order to operate of the relay, it is necessary that the voltage be higher than the operate voltage and the operate voltage rises in accordance with the increase in the resistance value. However, for some polarized relays, this rate of change is considerably smaller.

©Panasonic Industry Co., Ltd. 2024

Downloaded from Arrow.com.

Ambient Environment

■ Usage, Transport, and Storage Conditions

During usage, storage, or transportation, avoid locations subjected to direct sunlight and maintain normal temperature, humidity and pressure conditions.

●Temperature/Humidity/Pressure

When transporting or storing relays while they are tube packaged, there are cases the temperature may differ from the allowable range. In this case be sure to check the individual specifications.

Also allowable humidity level is influenced by temperature, please check charts shown below and use relays within mentioned conditions. (Allowable temperature values differ for each relays, please refer to the relay's individual specifications.)

1) Temperature:
The tolerance temperature range differs for each relays, please refer to the relay's individual specifications

2) Humidity: 5 to 85 % RH

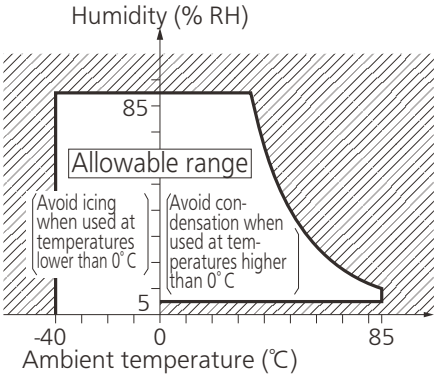

3) Pressure: 86 to 106 kPa

●Dew condensation

Condensation occurs when the ambient temperature drops suddenly from a high temperature and humidity, or the relay is suddenly transferred from a low ambient temperature to a high temperature and humidity. Condensation causes the failures like insulation deterioration, wire disconnection and rust etc. Panasonic Industry Co., Ltd. does not guarantee the failures caused by condensation.

The heat conduction by the equipment may accelerate the cooling of device itself, and the condensation may occur.

Please conduct product evaluations in the worst condition of the actual usage. (Special attention should be paid when high temperature heating parts are close to the device. Also please consider the condensation may occur inside of the device.)

●Icing

Condensation or other moisture may freeze on relays when the temperature become lower than 0 ℃.This icing causes the sticking of movable portion, the operation delay and the contact conduction failure etc. Panasonic Industry Co., Ltd. does not guarantee the failures caused by the icing.

The heat conduction by the equipment may accelerate the cooling of relay itself and the icing may occur. Please conduct product evaluations in the worst condition of the actual usage.

●Low temperature and low humidity

The plastic becomes brittle if the relay is exposed to a low temperature, low humidity environment for long periods of time.

●High temperature and high humidity

Storage for extended periods of time (including transportation periods) at high temperature or high humidity levels or in atmospheres with organic gases or sulfide gases may cause a sulfide film or oxide film to form on the surfaces of the contacts and/or it may interfere with the functions. Check out the atmosphere in which the units are to be stored and transported.

●Package

In terms of the packing format used, make every effort to keep the effects of moisture, organic gases and sulfide gases to the absolute minimum.

●Silicon

When a source of silicone substances (silicone rubber, silicone oil, silicone coating materials and silicone filling materials etc.) is used around the relay, the silicone gas (low molecular siloxane etc.) may be produced.

This silicone gas may penetrate into the inside of the relay. When the relay is kept and used in this condition, silicone compound may adhere to the relay contacts which may cause the contact failure. Do not use any sources of silicone gas around the relay (Including plastic sealed types).

●NOx Generation

When relay is used in an atmosphere high in humidity to switch a load which easily produces an arc, the NOx created by the arc and the water absorbed from outside the relay combine to produce nitric acid.

This corrodes the internal metal parts and adversely affects operation.

Avoid use at an ambient humidity of 85 % RH or higher (at 20 ℃). If use at high humidity is unavoidable, please contact our sales representative.

©Panasonic Industry Co., Ltd. 2024

Downloaded from Arrow.com.

Others

■ Cleaning

- Although the environmentally sealed type relay (plastic sealed type, etc.) can be cleaned, avoid immersing the relay into cold liquid (such as cleaning solvent) immediately after soldering. Doing so may deteriorate the sealing performance.
- Cleaning with the boiling method is recommended (The temperature of cleaning liquid should be 40 ℃ or lower). Avoid ultrasonic cleaning on relays. Use of ultrasonic cleaning may cause breaks in the coil or slight sticking of the contacts due to ultrasonic energy.

Please refer to **" the latest product specifications "** when designing your product.
• Requests to customers:
https://industry.panasonic.com/global/en/salespolicies

©Panasonic Industry Co., Ltd. 2024

Downloaded from Arrow.com.

■ Global Sales Network Information: industry.panasonic.com/global/en/salesnetwork/globalnetwork

Panasonic
INDUSTRY

Panasonic Industry Co., Ltd.
Electromechanical Control Business Division
■1006, Oaza Kadoma, Kadoma-shi, Osaka 571-8506, Japan
industry.panasonic.com

©Panasonic Industry Co., Ltd. 2026

Downloaded from Arrow.com.

Specifications are subject to change without notice.
ASCTB183E 202607
2026.7