Alle Rechte vorbehalten/ *All rights reserved*

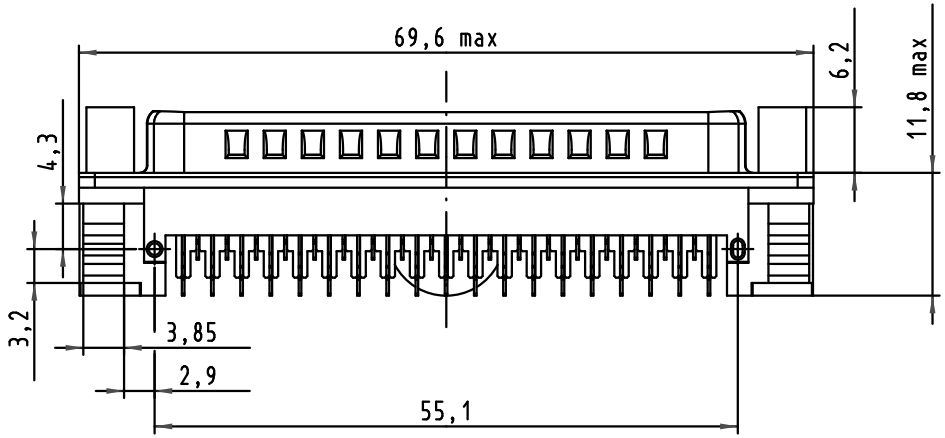

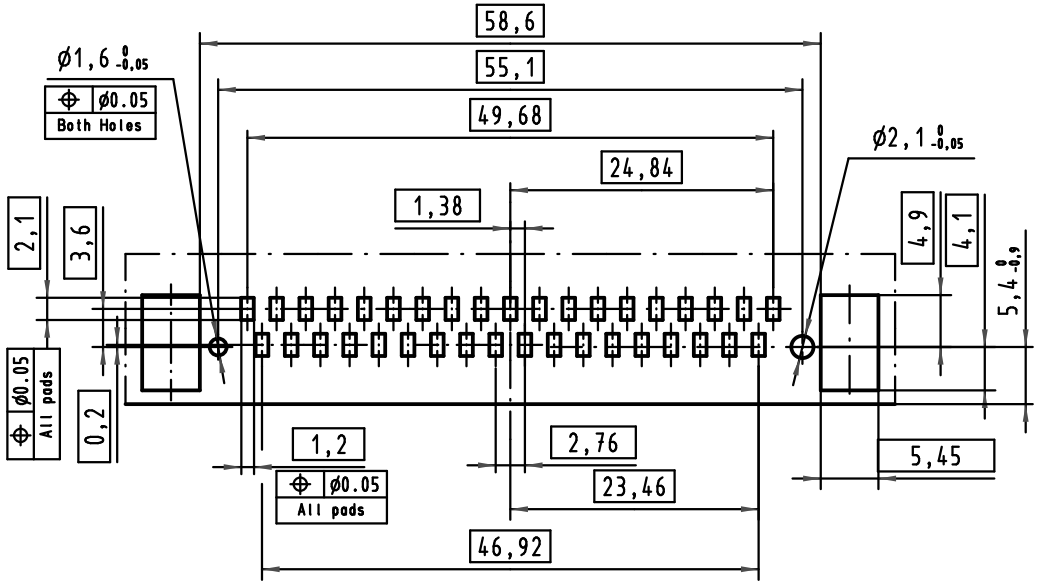

PCB Layout, component side (thickness 1,6mm min.)

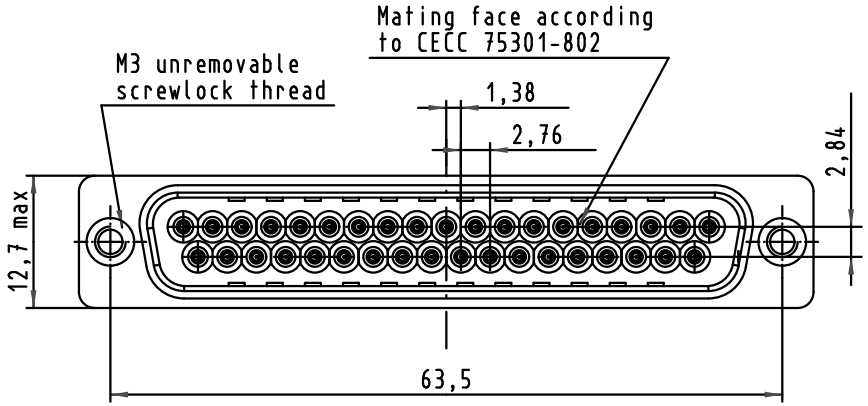

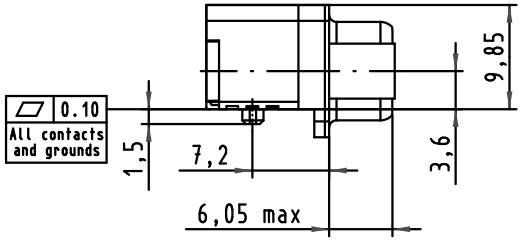

Max. Temperature: 260°C during 10 seconds

Part number	PL	Thread	Index designation		
09554663819.741	1	M3	Black Insulator	Reel Packaging (160 connectors) see page 2/2	
09554666819.741	2				
09554667819.741	3				

Mod.	Dat.	Name
36152	29Sep2010	ED

	Dat.	Name
Detail.	29Sep2010	ED
Insp.		
Stand.		

All Dim. in mm
Orig. Size DIN A 4

HARTING EURL
F-95972 Paris

D-SUB Low Profile 37p Male
Right angled SMT
with die casted grounds
and M3 unremovable screwlocks

Maßstab/ *Scale* 1,4:1

TB 09 55 466 x819

Sub.

Blatt/ *Page* 1/2

Downloaded from Arrow.com.

Alle Rechte vorbehalten/ *All rights reserved*

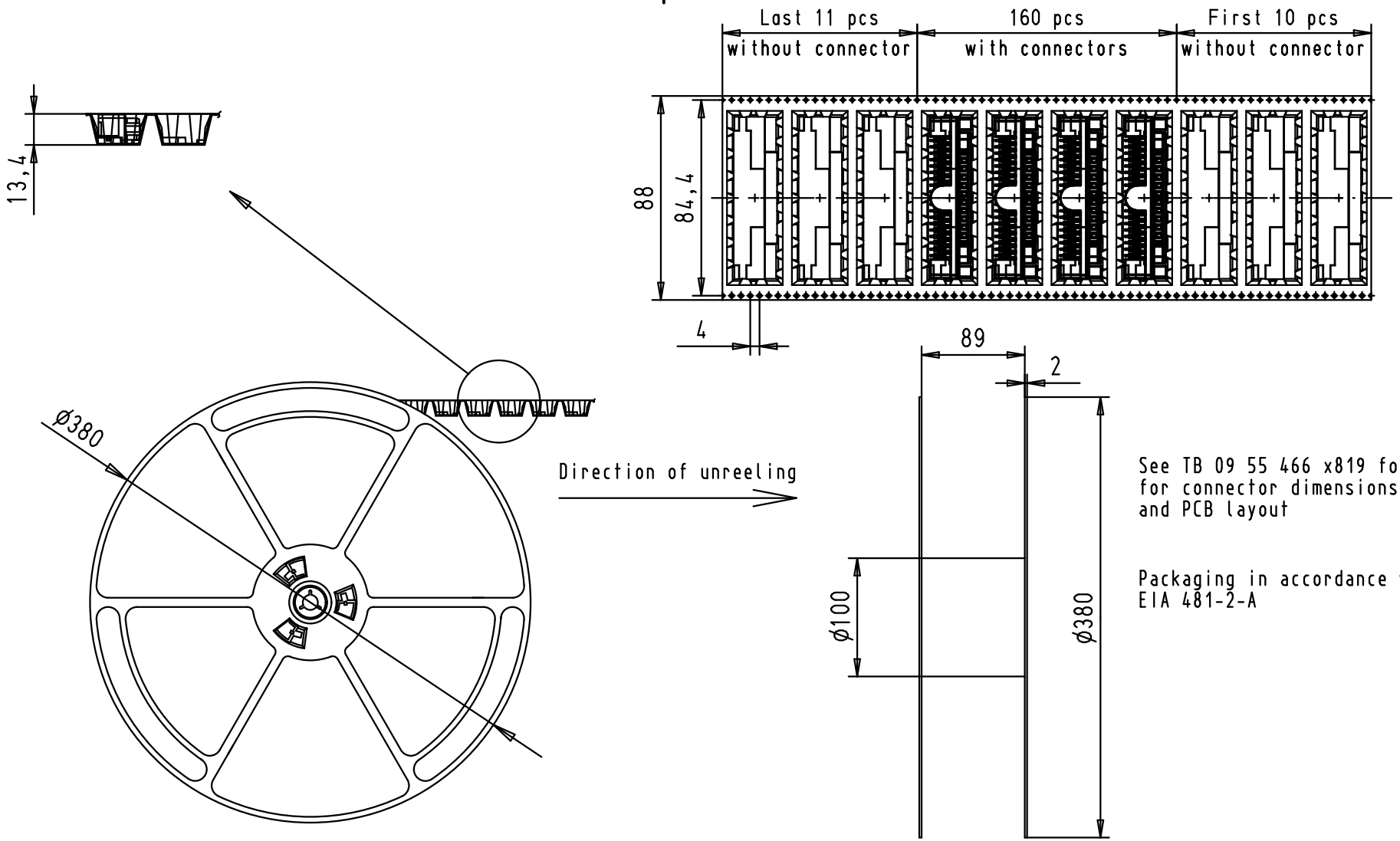

See TB 09 55 466 x819 folio 1/2
for connector dimensions
and PCB layout

Packaging in accordance with
EIA 481-2-A

Part number	PL	Thread	Index designation		Mod.	Dat.	Name
09554663819.741	1	M3	Black Insulator	Reel Packaging (160 connectors)	36152	29Sep2010	ED
09554666819.741	2						
09554667819.741	3						

	Dat.	Name
Detail.	29Sep2010	ED
Insp.		
Stand.		

All Dim. in mm
Orig. Size DIN A 4

D-SUB Low Profile 37p Male
Right angled SMT
with die casted grounds
and M3 unremovable screwlocks

Maßstab/ *Scale*

HARTING EURL
F-95972 Paris

TB 09 55 466 x819

Sub.

Blatt/ *Page* 2/2

Downloaded from Arrow.com.