CUI Devices is now Same Sky! Learn More

MODEL: GF1207 | DESCRIPTION: SPEAKER

FEATURES

- 137.5 mm
- round frame
- 5.0 W
- 8 Ω
- ferrite magnet
- paper cone

SPECIFICATIONS

parameter	conditions/description	min	typ	max	units
input power			5.0	10.0	W
impedance	at 0.6 kHz, 1.0 V	6.8	8	9.2	Ω
resonant frequency (Fo)	at 1.0 V	88	160	232	Hz
frequency response		Fo		8,000	Hz
sound pressure level	at 1.0 W, 50 cm, avg at 0.5, 0.6, 0.8, 1.0 kHz	93	96	99	dB
buzz, rattle, etc.	must be normal at sine wave		6.3		V
dimensions	Ø137 x 31.5				mm
magnet	ferrite				
cone material	paper				
terminal	solder eyelets				
weight			307.0		g
operating temperature		-25		70	°C
hand soldering	for maximum 5 seconds	400	420	440	°C
RoHS	yes				

Downloaded from Arrow.com.

MECHANICAL DRAWING

units: mm
tolerance: ±0.8 mm

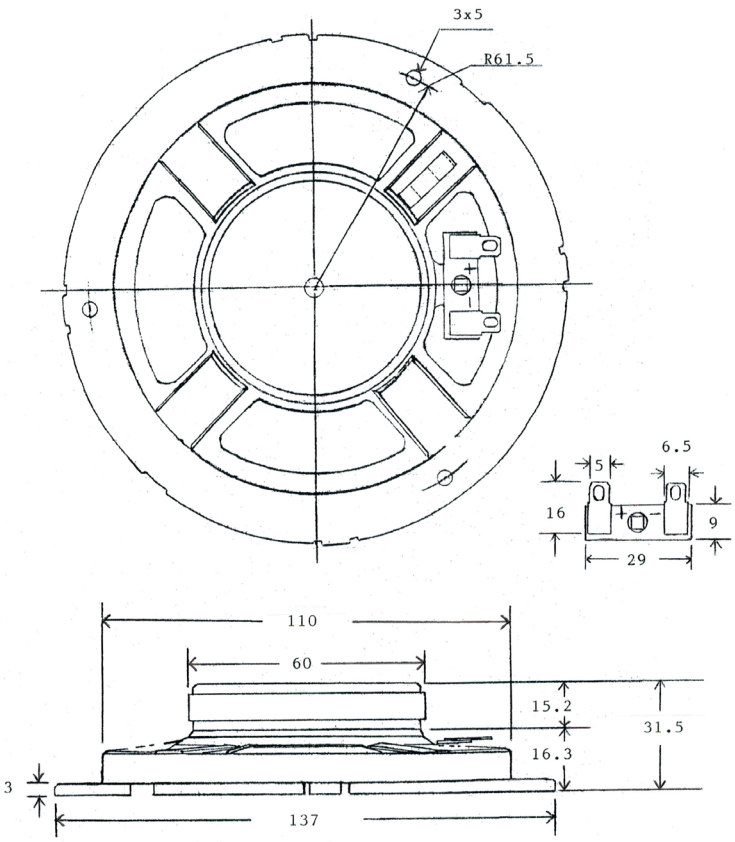

FREQUENCY RESPONSE CURVE

parameter	conditions/description
potentiometer range	50 dB
rectifier	RMS
lower limit frequency	20 Hz
wr. speed	100 mm/sec
zero level	60 dB

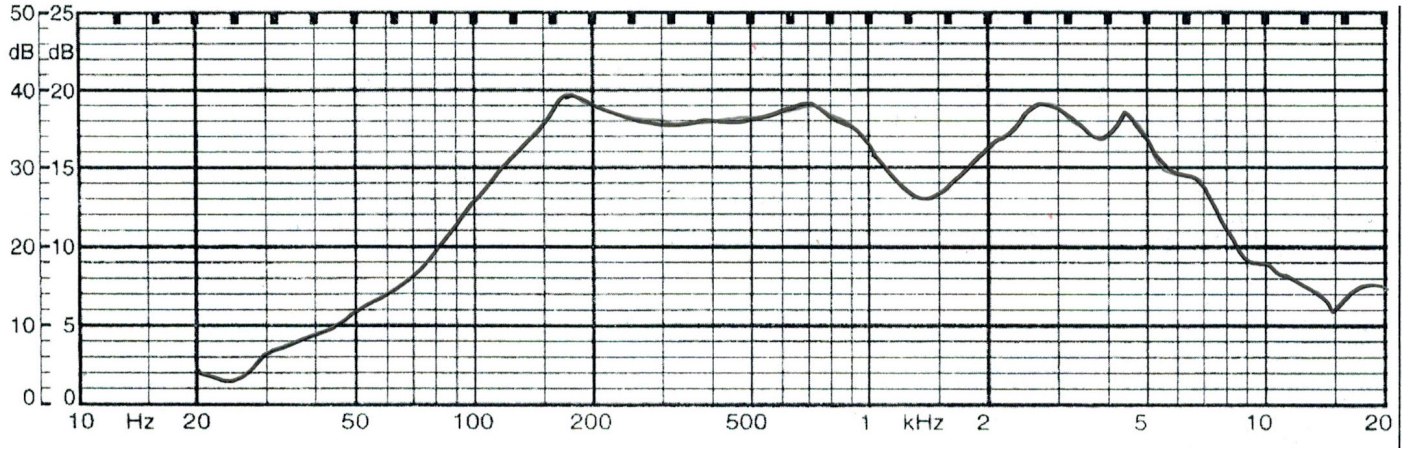

Downloaded from Arrow.com.

REVISION HISTORY

rev.	description	date
1.0	initial release	01/20/2003
1.01	brand update	02/17/2020
1.02	logo, datasheet style update	08/05/2022
1.03	CUI Devices rebranded to Same Sky	09/11/2024

The revision history provided is for informational purposes only and is believed to be accurate.

Same Sky offers a one (1) year limited warranty. Complete warranty information is listed on our website.

Same Sky reserves the right to make changes to the product at any time without notice. Information provided by Same Sky is believed to be accurate and reliable. However, no responsibility is assumed by Same Sky for its use, nor for any infringements of patents or other rights of third parties which may result from its use.

Same Sky products are not authorized or warranted for use as critical components in equipment that requires an extremely high level of reliability. A critical component is any component of a life support device or system whose failure to perform can be reasonably expected to cause the failure of the life support device or system, or to affect its safety or effectiveness.

Downloaded from Arrow.com.