THIS DRAWING IS UNPUBLISHED. RELEASED FOR PUBLICATION 2005
© COPYRIGHT 2004 BY - ALL RIGHTS RESERVED.

LOC	DIST
FM	-

REVISIONS

P	LTR	DESCRIPTION	DATE	DWN	APVD
	F7	LASER PRINT UPDATED WITH BR VERSION	06NOV2018	SZN	LSZ
	F8	NEW VERSION ADDED	03MAY2019	SZN	LSZ
	F9	LASER PRINT UPDATED WITH CN LOCATION	06AUG2019	SZN	LSZ
	F10	BOTTOM VIEW ADDED FOR CODING D	25MAR2020	SZN	LSZ

PRINT: (1)
5:1

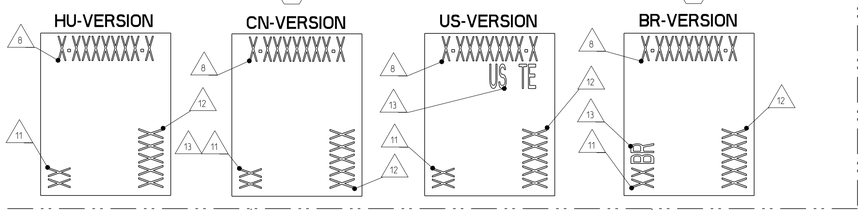

RETAINER IN END POSITION

A-A
3:1

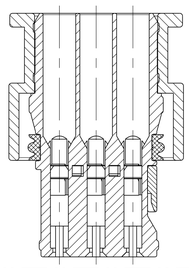

CPA IN END POSITION

B-B
3:1

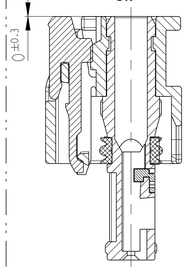

1-1718644-5 (12)

B-B
3:1

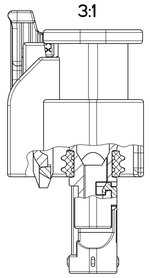

1-1718644-6 (10)
3:1

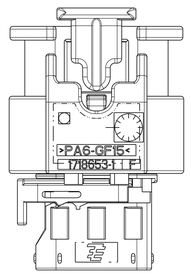

3D VIEW
1:1

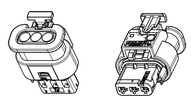

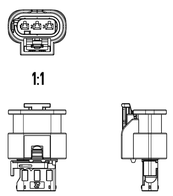

1:1

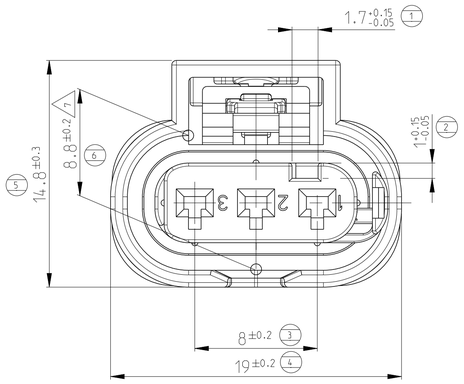

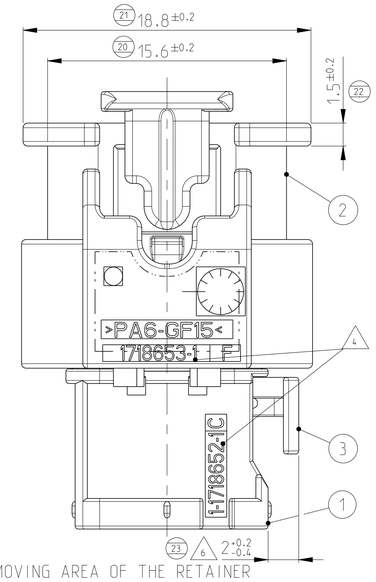

MOVING AREA OF THE RETAINER

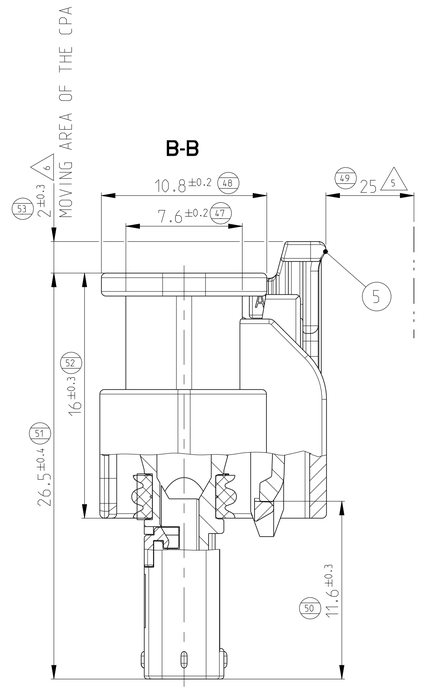

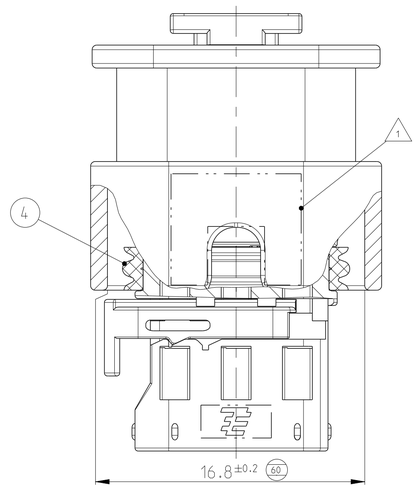

TE-ORDER NO. (8)	COD	DESCRIPTION	REV	QTY	DESCRIPTION	MATERIAL	SURFACE/COLOUR	ITEM	VAR
1-1718644-6 (F8)	A	3pos. MCON 1.2 - LL Connector Sealed	F	1	MCON 1.2 - CPA	PA46-GF15	GRAY SIML. RAL 7037	5	III (10)
				1	3pos. MCON 1.2 - Seal	MVQ	NATURE	4	
				1	3pos. MCON 1.2 - Retainer	PA66-GF15	VIOLETT SIML. RAL 4006	3	
				1	3pos. MCON 1.2 - Protection Cover	PA6-GF15	BLACK SIML. RAL 9011	2	
				1	3pos. MCON 1.2 - Recepticle Hsg.	PA66-GF30	BLACK SIML. RAL 9011	1	
2-1718644-5	B	3pos. MCON 1.2 - LL Connector Sealed	A	1	MCON 1.2 - CPA	PA46-GF15	GRAY SIML. RAL 7037	5	II (9)
				1	3pos. MCON 1.2 - Seal	MVQ	GREEN	4	
				1	3pos. MCON 1.2 - Retainer	PA66-GF15	VIOLETT SIML. RAL 4006	3	
				1	3pos. MCON 1.2 - Protection Cover	PA46	BLACK SIML. RAL 9011	2	
				1	3pos. MCON 1.2 - Recepticle Hsg.	PA66-GF30	NATURE	1	
1-1718644-5	A	3pos. MCON 1.2 - LL Connector Sealed	D	1	MCON 1.2 - CPA	PA46-GF15	GRAY SIML. RAL 7037	5	
				1	3pos. MCON 1.2 - Seal	MVQ	GREEN	4	
				1	3pos. MCON 1.2 - Retainer	PA66-GF15	VIOLETT SIML. RAL 4006	3	
				1	3pos. MCON 1.2 - Protection Cover	PA46	BLACK SIML. RAL 9011	2	
				1	3pos. MCON 1.2 - Recepticle Hsg.	PA66-GF30	BLACK SIML. RAL 9011	1	
4-1718644-1	(F7) D	3pos. MCON 1.2 - LL Connector Sealed	A	1	MCON 1.2 - CPA	PA46-GF15	GRAYSIML. RAL 7037	5	I
				1	3pos. MCON 1.2 - Seal	MVQ	NATURE	4	
				1	3pos. MCON 1.2 - Retainer	PA66-GF15	VIOLETT SIML. RAL 4006	3	
				1	3pos. MCON 1.2 - Protection Cover	PA6-GF15	BLACK SIML. RAL 9011	2	
				1	3pos. MCON 1.2 - Recepticle Hsg.	PA66-GF30	VIOLETT SIML. RAL 4006	1	
(F8) 3-1718644-1	C	3pos. MCON 1.2 - LL Connector Sealed	F	1	MCON 1.2 - CPA	PA46-GF15	GRAY SIML. RAL 7037	5	
				1	3pos. MCON 1.2 - Seal	MVQ	NATURE	4	
				1	3pos. MCON 1.2 - Retainer	PA66-GF15	VIOLETT SIML. RAL 4006	3	
				1	3pos. MCON 1.2 - Protection Cover	PA6-GF15	BLACK SIML. RAL 9011	2	
				1	3pos. MCON 1.2 - Recepticle Hsg.	PA66-GF30	BLUE SIML. RAL 5012	1	
2-1718644-1	B	3pos. MCON 1.2 - LL Connector Sealed	F	1	MCON 1.2 - CPA	PA46-GF15	GRAY SIML. RAL 7037	5	
				1	3pos. MCON 1.2 - Seal	MVQ	NATURE	4	
				1	3pos. MCON 1.2 - Retainer	PA66-GF15	VIOLETT SIML. RAL 4006	3	
				1	3pos. MCON 1.2 - Protection Cover	PA6-GF15	BLACK SIML. RAL 9011	2	
				1	3pos. MCON 1.2 - Recepticle Hsg.	PA66-GF30	NATURE	1	
1-1718644-1	A	3pos. MCON 1.2 - LL Connector Sealed	F	1	MCON 1.2 - CPA	PA46-GF15	GRAY SIML. RAL 7037	5	
				1	3pos. MCON 1.2 - Seal	MVQ	NATURE	4	
				1	3pos. MCON 1.2 - Retainer	PA66-GF15	VIOLETT SIML. RAL 4006	3	
				1	3pos. MCON 1.2 - Protection Cover	PA6-GF15	BLACK SIML. RAL 9011	2	
				1	3pos. MCON 1.2 - Recepticle Hsg.	PA66-GF30	BLACK SIML. RAL 9011	1	

4805 (3/11)

NOTES:

(1) AREA FOR PRINT

2 USABLE CONTACTS MCON 1.2 LL
SEE TE-NO. 1452674

3 MAX. WIRE SIZE RANGE 1.0 mm² FLR PERMITTED
FOR CAVITY-∅ 3.55MM
QUANTITY SEE WIRE HARNESS DRAWING
FOR PERMISSIBLE CURRENT CARRYING CAPACITY OF THE SINGLE CONTACT
SEE PRODUCT SPECIFICATION NO.108-18782

(4) SUPPLIER-MARK

(5) SPACE OF ACTIVITY

(6) SUPPLY CONDITION: CPA AND RETAINER IN PRELOCKED POSITION

(7) WARPAGE PERMITTED TO MAX. -0.5mm

(8) TE ORDER-NO.

9 ACCORDING TO INTERFACE DRAWING
SEE TE-NO. 114-18679-3

(9) VAR II: TEMERATURE RESISTANCE OF PLASTIC PARTS 150°C

(10) VAR III: VERSION WITH 180°TURNED REC. HSG (F8)

(11) ASSEMBLY LINE SEGMENT IDENTIFICATION

(12) DATE CODE (DDDYY)

(13) DIVERGENT MARKING FOR PARTS FROM CHINESE, BRASIL AND U.S. PRODUCTION

CODING A AS SHOWN

CODINGS
M 2:1

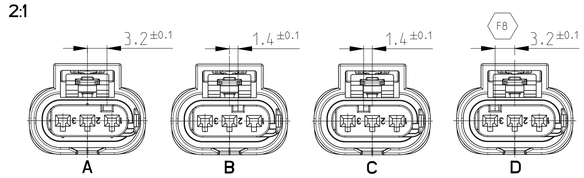

TOLERANCES UNLESS OTHERWISE SPECIFIED ACC. TO DIN 16901-140(M)CENTRIC TO NOMINAL DIMENSION. EDITION 1982-11 SHALL APPLY.
Freimasstoleranzen nach DIN 16901-140(M). Es gilt die Ausgabe 1982-11.

PRODUCT CHARACTERISTICS ACC. QMP EMEA_12
BESONDERE MERKMALE NACH QMP EMEA_12

THIS DRAWING IS A CONTROLLED DOCUMENT.

DIMENSIONS: mm

TOLERANCES UNLESS OTHERWISE SPECIFIED: 0 PLC ±; 1 PLC ±; 2 PLC ±; 3 PLC ±; 4 PLC ±; ANGLES ±2°

MATERIAL - -

FINISH - -

DWN	18OCT2004	C. L'Abbate
CHK	13JAN2005	A. Schroebel
APVD	-	J. Woller
PRODUCT SPEC	108-18969	
APPLICATION SPEC	114-18861	
WEIGHT	3 g	

TE Connectivity

NAME: 3pos. MCON 1.2 - LL Connector, Sealed
- -

SIZE	CAGE CODE	DRAWING NO.	RESTRICTED TO
A1	00779	C-1718644	-

CUSTOMER DRAWING | SCALE 5:1 | SHEET 1 OF 1 | REV F10

Downloaded from Arrow.com.