REVISIONS					
REV	ECO	DESCRIPTION	DATE	BY	APPR
A3	-	RELEASE NEW DWG FORMAT	18/OCT/13	JARRY	-

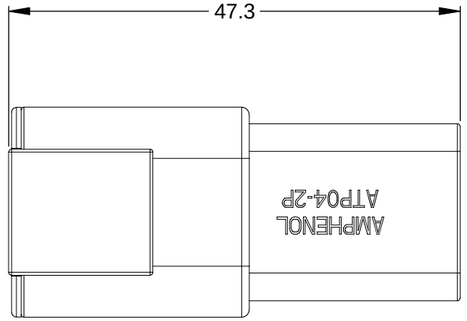

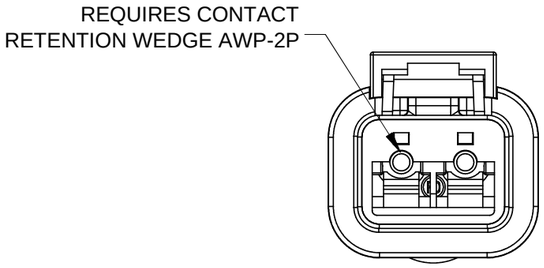

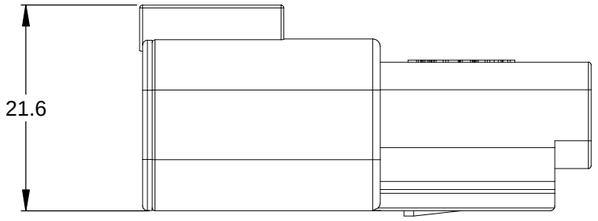

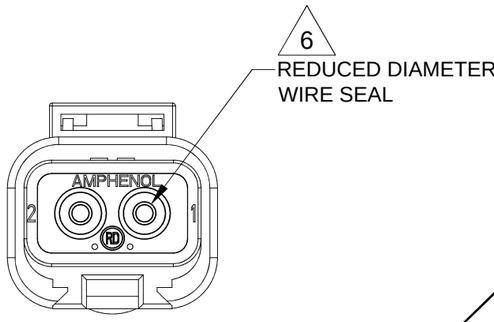

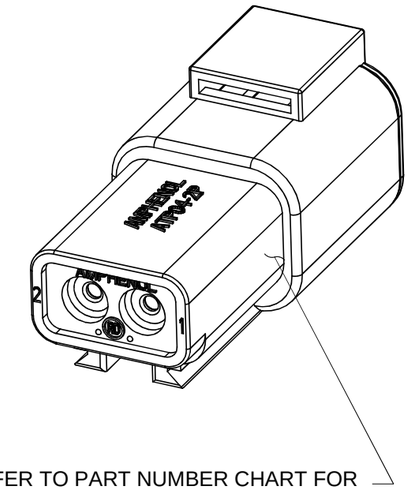

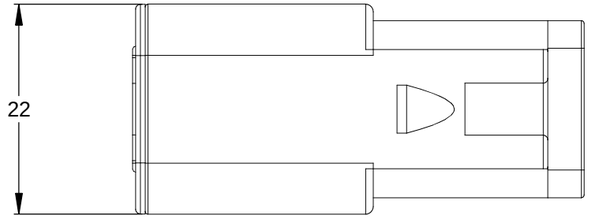

NOTES: UNLESS OTHERWISE SPECIFIED

1. MATERIAL:
   HOUSING: THERMOPLASTIC
   SEAL: SILICONE RUBBER

2. MODIFICATIONS: REDUCED DIAMETER WIRE SEAL

3. SPECIFICATIONS:
   3.1 CURRENT RATING: 25 AMPS
   3.2 OPERATING TEMPERATURE: -55°C TO +125°C
   3.3 DIELECTRIC WITHSTANDING VOLTAGE: LESS THAN 2 MILLIAMPS CURRENT LEAKAGE @ 1500 VOLTS AC.
   3.4 INSULATION RESISTANCE: 1000 MEGOHMS MIN @ 25°C.
   3.5 MOISTURE RESISTANCE: IP67 (MATED CONDITION)
   3.6 MATING CYCLE DURABILITY: 100 CYCLES
   3.7 RoHS COMPLIANT

4. MATING PART: ATP06-2S* PLUG.
   (* = MODIFICATIONS AND COLORS)

5. ALL DIMENSIONS ARE FOR REFERENCE USE ONLY.

6 CONTACT SIZE AND REAR SEAL WIRE RANGE:

CONTACT SIZE	MIN. INSUL O.D.	MAX. INSUL O.D.	TYPICAL WIRE RANGE
12	2.46 mm (.097 in)	4.01 mm (.158 in)	12 - 14 AWG

PART NUMBER CHART	
COLOR	PART NUMBER
GREY	ATP04-2P-RD01
BLACK	ATP04-2P-RD01BK

STANDARD MOLDED COLOR IS GREY. ADDITIONAL COLOR (BLACK) IS AVAILABLE VIA SPECIAL ORDER.

	SEE PART NUMBER CHART		
	PART NUMBER	DESCRIPTION	ITEM
QUANTITY	MATERIALS LIST		

UNLESS OTHERWISE SPECIFIED
1) All dimensions are in metric(mm).
2) Tolerances are as follows:
1 PL DEC ±0.30 | Fractions ±1/64
2 PL DEC ±0.15 | Angles ±1°
3 PL DEC ±0.08
3) Note reference = X

MATERIAL SPECIFICATIONS:

PROCESS SPECIFICATIONS:

NEXT ASS'Y:

SIGNATURES		DATE
DRAWN:	JARRY	18/OCT/13
CHECKED:		
ENGINEER:		
APPROVAL:		
CUSTOMER:		

THIS DRAWING IS SUPPLIED FOR INFORMATION ONLY. DESIGN FEATURES, SPECIFICATIONS AND PERFORMANCE DATA SHOWN HEREON ARE THE PROPERTY OF THE AMPHENOL CORPORATION. NO RIGHTS OF REPRODUCTION ARE IMPLIED. ALL DIMENSIONS ARE SUBJECT TO NORMAL MANUFACTURING VARIATIONS.

Amphenol
Sine Systems - www.amphenol-sine.com
44724 Morley Drive
Clinton Township, MI 48036

RECEPTACLE, 2 PIN, REDUCED DIAMETER WIRE SEAL, ATP SERIES

SIZE	TYPE	DWG NO:	REVISION
B	C-	ATP04-2P-RD01XX	A3

SCALE: NONE SHEET 1 OF 1

TITLE: RECEPTACLE, 2 PIN, REDUCED DIA WIRE SEAL, ATP SERIES
DWG NO: ATP04-2P-RD01XX
REV: A3
SH: 1
OF: 1

Downloaded from Arrow.com.

AHD, ARB, ATP, ATHD, DuraMate™ and PanelMate™ Series

Size 12 Contact & Tooling Options

Contacts - Machined

Part Number	Type	Style	Contact Size	Amp	Wire Range (AWG)	Wire Range (mm^2)	Insulation OD (mm)	Plating	Reel Size	Packaging
AT60-204-12141-10	Pin	Machined	Size 12	25A	10-12AWG	-	-	Nickel-Plated	-	-
AT60-204-12141	Pin	Machined	Size 12	25A	12-14AWG	-	-	Nickel-Plated	-	-
AT60-220-1231	Pin	Machined	Size 12	25A	12-14AWG	-	-	Gold-Plated	-	-
AT60-204-12NKIT	Pin	Machined	Size 12	25A	12-14AWG	-	-	Nickel-Plated	-	-
AT60-220-1231-1618	Pin	Machined	Size 12	25A	16-18AWG	-	-	Gold-Plated	-	-
AT60-220-1231-1820	Pin	Machined	Size 12	25A	18-20AWG	-	-	Gold-Plated	-	-
AT62-203-12141-10	Socket	Machined	Size 12	25A	10-12AWG	-	-	Nickel-Plated	-	-
AT62-203-12141	Socket	Machined	Size 12	25A	12-14AWG	-	-	Nickel-Plated	-	-
AT62-203-12NKIT	Socket	Machined	Size 12	25A	12-14AWG	-	-	Nickel-Plated	-	-
AT62-210-1231	Socket	Machined	Size 12	25A	12-14AWG	-	-	Gold-Plated	-	-
AT62-210-1231-1618	Socket	Machined	Size 12	25A	16-18AWG	-	-	Gold-Plated	-	-
AT62-210-1231-1820	Socket	Machined	Size 12	25A	18-20AWG	-	-	Gold-Plated	-	-

Contacts - Stamped & Formed

AT60-12-0222	Pin	S&F	Size 12	25A	10-12AWG	6.0-4.0mm^2	3.56 - 5.18mm	Nickel-Plated	-	-
AT60-12-0222-LP	Pin	S&F	Size 12	25A	10-12AWG	6.0-4.0mm^2	3.56 - 5.18mm	Nickel-Plated	-	Loose Piece
AT60-12-0244	Pin	S&F	Size 12	25A	10-12AWG	6.0-4.0mm^2	3.56 - 5.18mm	Gold-Plated	-	-
AT60-12-0244-LP	Pin	S&F	Size 12	25A	10-12AWG	6.0-4.0mm^2	3.56 - 5.18mm	Gold-Plated	-	Loose Piece
AT60-12-0144	Pin	S&F	Size 12	25A	12-14AWG	4.0-2.0mm^2	2.87 - 4.47mm	Gold-Plated	-	-
AT60-12-0144-LP	Pin	S&F	Size 12	25A	12-14AWG	4.0-2.0mm^2	2.87 - 4.47mm	Gold-Plated	-	Loose Piece
AT60-12-0166	Pin	S&F	Size 12	25A	12-14AWG	4.0-2.0mm^2	2.87 - 4.47mm	Nickel-Plated	-	-
AT60-12-0166-LP	Pin	S&F	Size 12	25A	12-14AWG	4.0-2.0mm^2	2.87 - 4.47mm	Nickel-Plated	-	Loose Piece
AT62-12-0222	Socket	S&F	Size 12	25A	10-12AWG	6.0-4.0mm^2	3.56 - 5.18mm	Nickel-Plated	-	-
AT62-12-0222-LP	Socket	S&F	Size 12	25A	10-12AWG	6.0-4.0mm^2	3.56 - 5.18mm	Nickel-Plated	-	Loose Piece
AT62-12-0244	Socket	S&F	Size 12	25A	10-12AWG	6.0-4.0mm^2	3.56 - 5.18mm	Gold-Plated	-	-
AT62-12-0244-LP	Socket	S&F	Size 12	25A	10-12AWG	6.0-4.0mm^2	3.56 - 5.18mm	Gold-Plated	-	Loose Piece
AT62-12-0144	Socket	S&F	Size 12	25A	12-14AWG	4.0-2.0mm^2	2.87 - 4.47mm	Gold-Plated	-	-
AT62-12-0144-LP	Socket	S&F	Size 12	25A	12-14AWG	4.0-2.0mm^2	2.87 - 4.47mm	Gold-Plated	-	Loose Piece
AT62-12-0166	Socket	S&F	Size 12	25A	12-14AWG	4.0-2.0mm^2	2.87 - 4.47mm	Nickel-Plated	-	-
AT62-12-0166-LP	Socket	S&F	Size 12	25A	12-14AWG	4.0-2.0mm^2	2.87 - 4.47mm	Nickel-Plated	-	Loose Piece

Tooling

Part Number	Tool Name	Style	Contact Size	Wire Range (AWG)	Material	Color
MFX-3966	Contact Locator for Hand Crimp Tool M300-25A	Machined	Size 12	10AWG	-	-
AUTK-12	Hand Crimp Tool	Machined	Size 12	10-18AWG	-	-
M300-25A	Hand Crimp Tool w MFX-3966 Locator	Machined	Size 12	10-18AWG	-	-
CA-5E12	Pneumatic Crimp Tool	Machined	Size 12/16/20	12-26AWG	-	-
CA-5D12	Universal Hand Crimp Tool	Machined	Size 12/16/20	12-26AWG	-	-
AUTK-100	Universal Heavy Duty Contact Crimping Tool Kit	Machined	Size 12/16/20	12-26AWG	-	-

Downloaded from Arrow.com.

Size 12 Contact & Tooling Options, cont.

Tooling, cont.

Part Number	Tool Name	Style	Contact Size	Wire Range (AWG)	Material	Color
MFX-3973-G or K	Crimp Die Press Applicator	S&F	Size 12	12AWG	-	-
MFX-3985-G or K	Crimp Die Press Applicator	S&F	Size 12	10-12AWG	-	-
ATT-12-00	Hand Crimp Tool	S&F	Size 12	12-14AWG	-	-
ATT-12-01	Hand Crimp Tool	S&F	Size 12	10AWG	-	-
ATRT-100	Contact and Wedgelock Extraction Tool	Universal	Universal	-	Steel	Silver
AT11-337-1205	Contact Extraction Tool	Universal	Size 12	-	Plastic	Orange
A114017	Seal Plug	Universal	Size 12/16	-	Thermoplastic	White

Downloaded from Arrow.com.