Rev	AWO #	Description	Date	Appr
-		RELEASED	10/27/09	

APPROVED: _____

DATE: _____ TITLE: _____

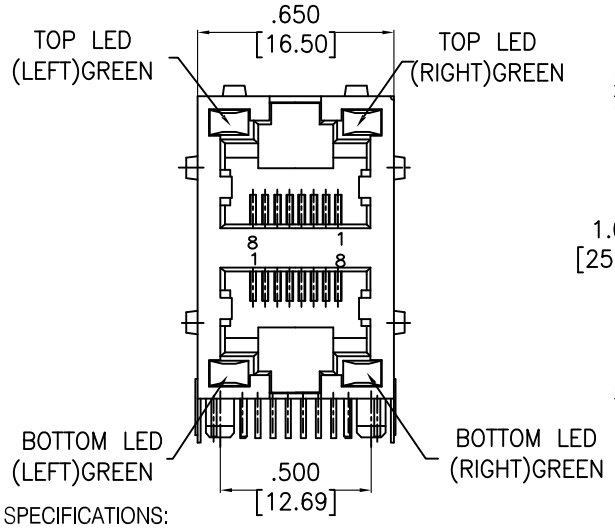

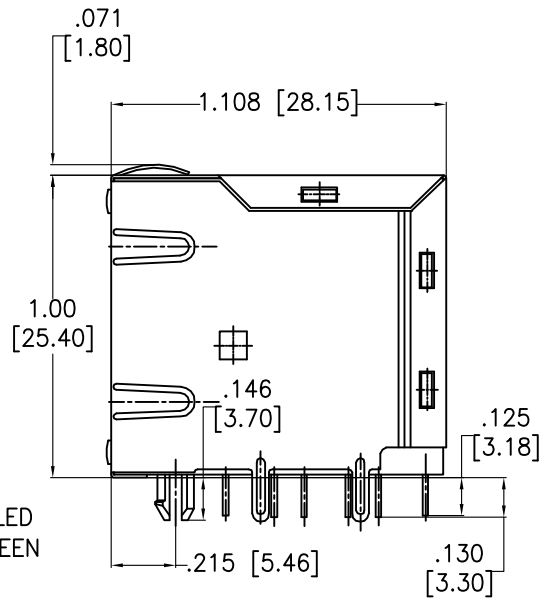

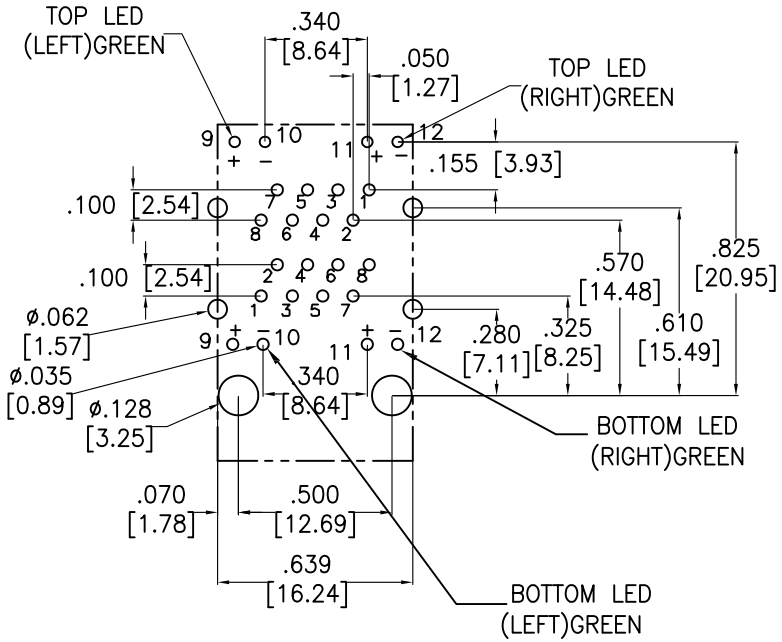

RECOMMENDED PCB LAYOUT
(COMPONENT SIDE)

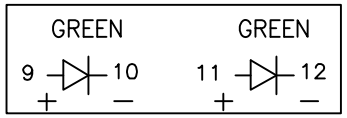

SPECIFICATIONS:

Material:

Insulator: PA66, rated UL 94V–0
Insulator color: Black
Contacts: Phopsphor Bronze
Shield: Brass, Nickel plated

Contact Plating:

Gold Flash over Nickel underplate on contact area,
Tin over Copper underplate on tails
(See chart for thickness).

Electrical:

Voltage plating: 125 VAC RMS.
Current plating: 1.5 Amp.
Contact resistance: 50 Milliohms max.
Insulation Resistance: 1000M ohm Min@ 500 VDC
Dielectric Withstanding Voltage: 1000 VAC for 1 minute.

Temperature Rating:

Operating temperature: −40°C to +85°C

Environmental:

Lead free, RoHS compliant.
Recommended soldering temp: 235°C for 5 sec.

X	PLATING
0	15 µin Gold
1	30 µin Gold
2	50 µin Gold

RoHS COMPLIANT

UNLESS OTHERWISE SPECIFIED
ALL DIMENSIONS ARE INCHES [MM]
TOLERANCES: EXCEPT AS NOTED

INCHES		HOLES	
.X	± .10	Ø.X	±.10
.XX	± .020	Ø.XX	±.015
.XXX	± .015	Ø.XXX	±.010

APPROVALS		DATE
DRAWN	DY	10/27/09
CHECKED		
APPROVED		

ADAM TECH
909 Rahway Avenue, Union, NJ 07083
Phone: 908-687-5000 Fax: 908-687-5710

TITLE
MODULAR JACK GANGED, 2 PORT, 8P8C
LEFT LEDS GREEN & RIGHT LEDS GREEN

SIZE	PART NO.	REV.
X	MTJG-2-88JX1-FSG-PG-LD	-

REF: S00005C | SCALE: NTS | SHEET 1 OF 1

Downloaded from Arrow.com.