THIS DRAWING IS UNPUBLISHED. RELEASED FOR PUBLICATION 20
© COPYRIGHT 20 BY - ALL RIGHTS RESERVED.

LOC	DIST
-	-

REVISIONS

P	LTR	DESCRIPTION	DATE	DWN	APVD
		REV PER ECO-12-014446	19DEC2012	RJM3	RG

△1 ELECTRICAL ENGAGEMENT POINT.

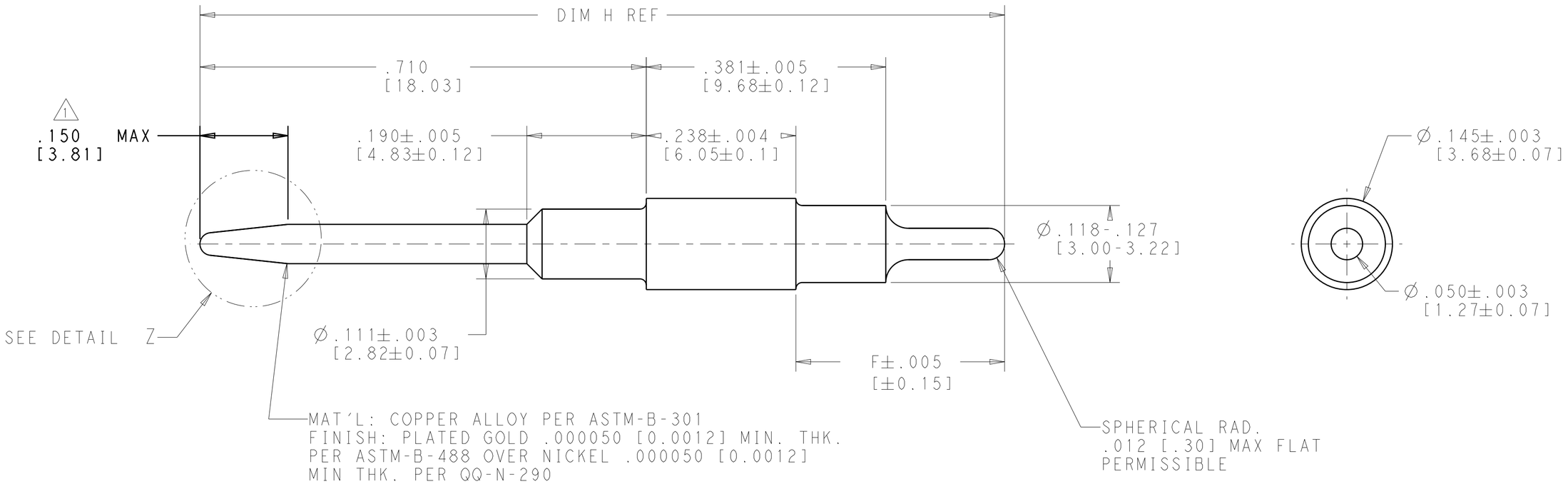

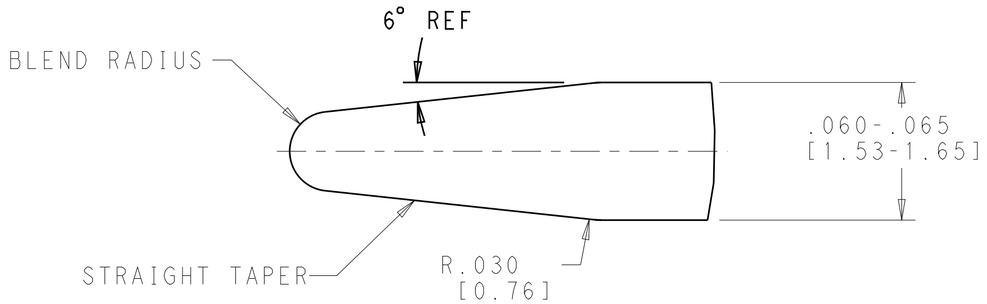

DETAIL Z
SCALE 20:1

DIM F REF	DIM. F	PART NUMBER
1.357 [34.47]	.409 [10.39]	446547-5
1.402 [35.61]	.454 [11.53]	446547-3
1.280 [32.51]	.332 [8.43]	446547-1

THIS DRAWING IS A CONTROLLED DOCUMENT. DIMENSIONING AND TOLERANCING PER ASME Y14.5M-2009

DIMENSIONS: INCHES

TOLERANCES UNLESS OTHERWISE SPECIFIED:
0 PLC ±-
1 PLC ±.1
2 PLC ±.02
3 PLC ±.005
4 PLC ±.0005
ANGLES ±-

MATERIAL: SEE CALLOUT
FINISH: SEE CALLOUT

DWN C.C.THOMAS 3-5-90
CHK S. WRIGHT 3-7-90
APVD S WRIGHT 3-7-90
PRODUCT SPEC -
APPLICATION SPEC -
WEIGHT -

TE Connectivity

NAME PIN CONTACT, SIZE 16, ARINC 600
- -

SIZE	CAGE CODE	DRAWING NO	RESTRICTED TO
A2	00779	C-446547	-

CUSTOMER DRAWING | SCALE 8:1 | SHEET 1 OF 1 | REV E

1471-9 (3/11)

Downloaded from Arrow.com.