TAOGLAS

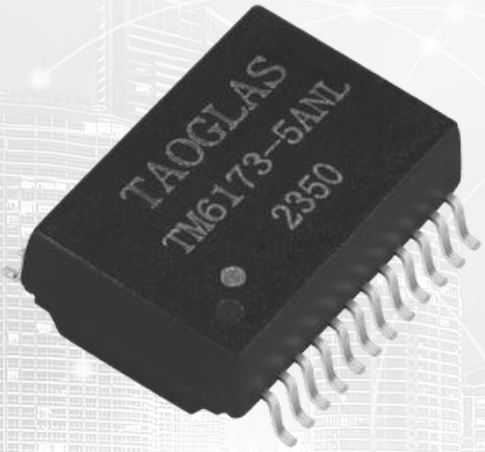

Datasheet

LAN Transformer 1G Base-T

Part No:
TM6173-5ANL

Description:

1G Base-T Transformer
Single Port and 24pin SMT

Features:

Transformer + CMC + Auto Transformer
Industrial grade
RoHS Compliant

Downloaded from Arrow.com.

1.	Introduction	3
2.	Specifications	4
3.	Mechanical	5
4.	Electrical	6
5.	Packaging	7
	Changelog	8

Taoglas makes no warranties based on the accuracy or completeness of the contents of this document and reserves the right to make changes to specifications and product descriptions at any time without notice. Taoglas reserves all rights to this document and the information contained herein. Reproduction, use or disclosure to third parties without express permission is strictly prohibited.

Downloaded from Arrow.com.

1. Introduction

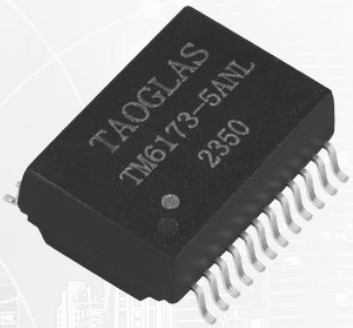

Featuring a compatible footprint with industry LAN transformers, and designed to work in demanding industrial environmental conditions, the Taoglas TM6173-5ANL is a LAN Transformer 1G Base-T of 24pins.

Typical applications for this cost-effective part are:

- Industrial Automation
- Hubs
- Routers
- Switches
- Wireless Access Points

The Taoglas Magnetics Product Team have over fifteen years of LAN magnetics design and high-quality manufacturing. With an ever-expanding portfolio, we provide trusted products and services to customers within a wide range of applications such as: Networking and Interconnect Devices, Servers, Switches, Router, Communication systems and any Digital Consumer electronics.

The Taoglas Exos Series offer an extensive product line of LAN Transformers designed for commercial and industrial grade applications, supporting 10/100 Base-T (Exos100 Series), 1G Base-T (Exos1G Series) and 10G Base-T (Exos10G Series). These products include Single, Dual, and Quad configurations not only for standard applications but also for Power over Ethernet (PoE, PoE+, PoE++).

For more information on the range of products or for assistance with integration, contact your regional Taoglas customer support team.

Downloaded from Arrow.com.

2. Specifications

Electrical Performance @25°C	
Inductance OCL	350uH Min @100KHz/0.1V/8mA/DC
Turns Ratio (±5%)	1CT: 1CT TX/RX=1:1
Insertion Loss (dB MAX)	0.1MHz: -1.1
	100MHz: -1.0
	125MHz: -2.0
Return Loss (dB MIN @100Ω±15%)	30MHz: -18
	60MHz: -12
	80MHz: -12
	100MHz: -10
Crosstalk (dB MIN)	30MHz: -43
	60MHz: -37
	100MHz: -33
Hi-Pot	1500Vrms Min
CMR (B MIN)	1-100MHz: -30
DCMR (dB MIN)	1-100MHz: -30
Isolation Voltage (Vrms MIN)	1500

Environmental Specifications	
Operating Temperature	-40°C TO +85°C

Compliance
RoHS Compliant
UL recognized - FILE NO. E528697
IEEE 802.3

Storage requirements	
Humidity	MSL - 1
Storage Temperature	-40°C TO +85°C

Downloaded from Arrow.com.

3. Mechanical

3.1 Mechanical Drawings

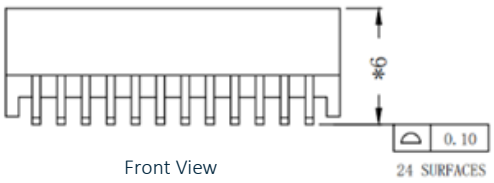

Front View

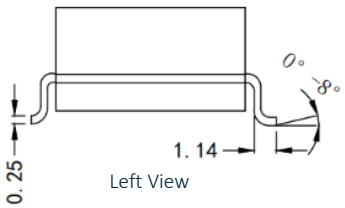

Left View

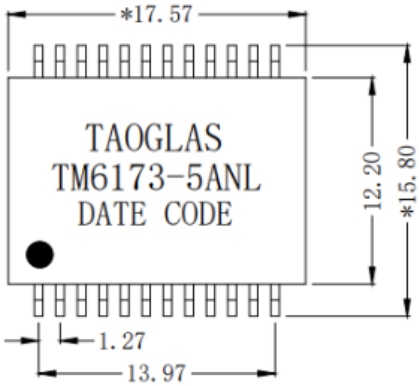

Top View

Mechanical Specifications	
Length	17.57 mm
Width	15.8 mm
Height	6 mm
Weight	1.8 g
Mounting Style	Surface Mount (SMT)

Dimensions are in millimeters with the following tolerances: X.XX = ±0.25

3.2 Pad Layout

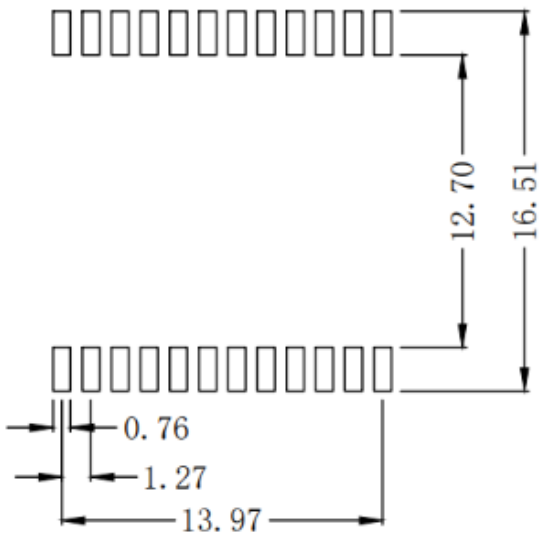

Suggested pad layout

Dimensions are in millimeters with the following tolerances: X.XX = ±0.10

Downloaded from Arrow.com.

4. Electrical

4.1 Electrical Drawings

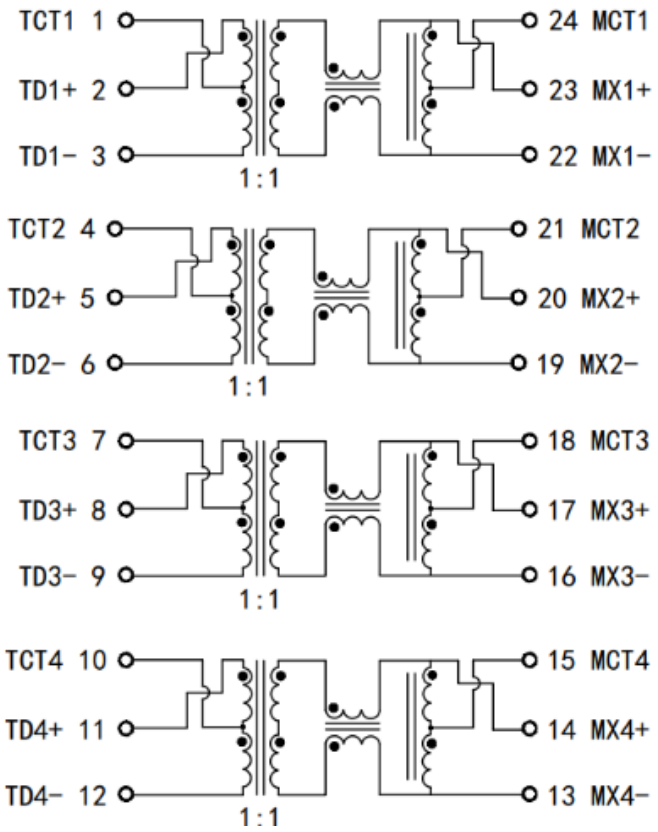

4.2 Profile of Reflow Solder

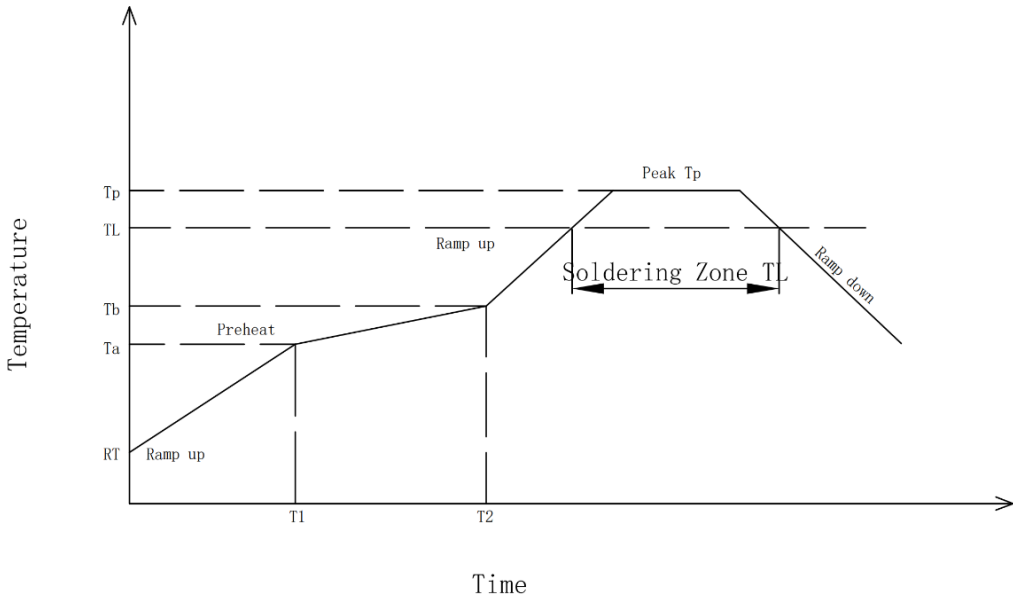

Preheat：
Temperature (Ta-Tb):150-200℃
Time(T1-T2):60-180s

Holding Temperature:217℃
Time (TL):60-150s

Max Temperature (Tp): 245℃
Max Time (Tp):5s

The average speed:3℃/S Max
The average cooling speed:6℃/S Max

From 25℃ to Products out of the furnace:6 minutes Max

Downloaded from Arrow.com.

5. Packaging

5.1 SPQ

1 reel = 400 pcs

Reel (mm) = 32x16.4x14.2

Weight = 1.13 kg

Vacuum bag & SPQ Label

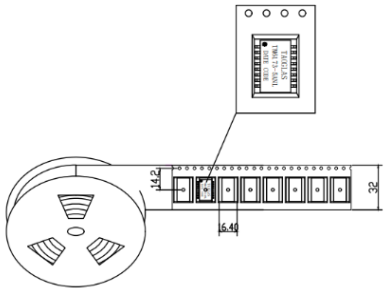

2 reels in a box

Box (mm) = 340x340x110

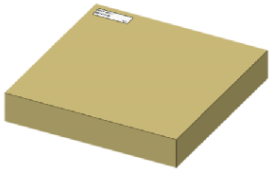

1 Carton = 4 reels = 1600 pcs

Carton dimensions: 370*370*250 mm

Carton Weight: 5.9 kg

Carton Label



5.2 Label

Taoglas Limited	
P/N NO: XXXXXXXX	
QYT: XXX PCS	DC: XXXX
DATE: XXXX-XX-XX	

SPQ Label (8x4cm)

Taoglas Limited	
P/N NO: XXXXXXXX	
PO: XXXXXXXX	B/N: XXXXXXXX
QYT: XXX PCS	DC: XXXX
DATE: XXXX-XX-XX	

Carton Label (8x4cm)

Downloaded from Arrow.com.

Changelog

Changelog for the datasheet

SPE-23-8-371 – TM6173-5ANL

Revision: B (Current Version)	
Date:	2025-07-15
Notes:	Updated spec table and packaging
Author:	Paul Liu

Previous Revisions

Revision: A (Original First Release)	
Date:	2024-01-01
Notes:	
Author:	Javier Vasena

Downloaded from Arrow.com.



www.taoglas.com

© Taoglas

Downloaded from Arrow.com.