| MOD | Description | Please follow Pulse Limits for the hazardous substances (RoHS, halogens) in the document "Pulse Hazardous Substances (HS) Limits (RPGE002-03)" and "Vendor Survey Questionnaire, Material Composition (LOM-SAF-L0040)". | Reliability Test Spec accorinding to WIHS7.5.33 (Reliability Test Working Instruction) Default test standard is Test Standard A if no definition |
|---|---|---|---|
| P3 | Change the Logo | | |

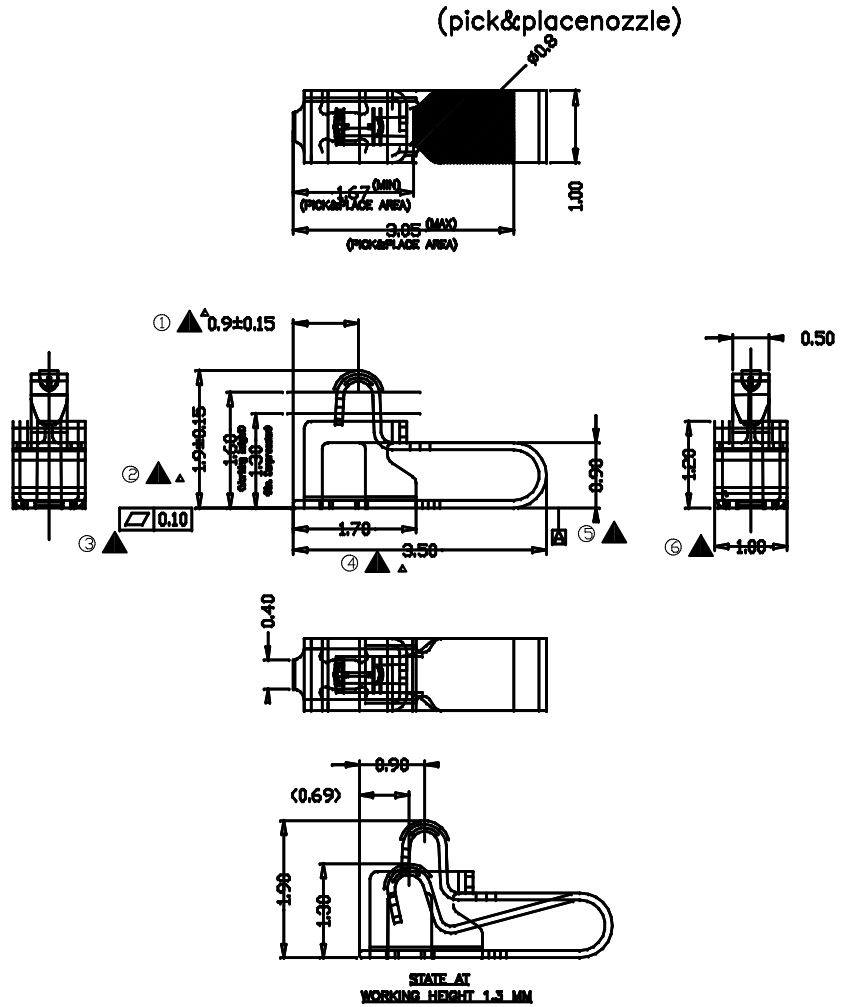


STATE AT
WORKING HEIGHT 1.3 MM

NOTES:UNLESS OTHERWISE SPECIFIED

1. DIM. MARKED TO BE CHECKED.
2. MATERIAL: Stainless steel THICKNESS T=0.10mm
3. NO CRACK APPEARS ON CONTACT BALL SHAPE.
4. NO LINES APPEARS ON BENDING AREA.
5. ALL UNSPECIFIED RADII TO BE 0.05 MAXIMUM .
6. BURR:0.03MAX;CUMBER:1.5MM MAX/500MM; TWIST:20°/500MM.
7. PRE-LOAD FORCE:0.40N ON CONTACT POINT
8. PLATING: 10u" Min GOLD PLATING ON CONTACT AREA,
   3u" Min GOLD PLATING ON SOLDER AREA,
   50u" MIN NICKEL PLATING OVER ALL

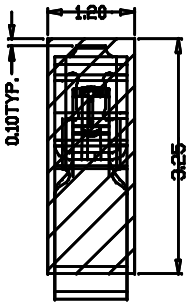


RECOMMENDED PCB LAYOUT

TOLERANCE:±0.05

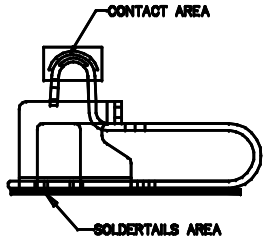


Plating Area

Confidential
This is a proprietary information of Pulse Suzhou.
No reporduction/copying is allowed without permission.

Functional Characteristics Key (Cpk requirement : Cpk) )

- Process Capability Studies required( total pcs )
- Ongoing Statistical Process Control Required ( total pcs )
- Critical dimension need to be measured, no CPK requirement ( total pcs )

| | |
|---|---|
| .X± 0.15 | |
| .XX± 0.10 | |
| .XXX±0.05 | |
| X.°± 5° | |

PULSE (SUZHOU) WIRELESS PRODUCTS CO.LTD.

Pulse A WALTER Company

99 HUOJU RD. SUZHOU
NEW DISTRICT
215009
P.R.CHINA

PRODUCT(S)
SW0167N

ITEM
TX13011-001(CLIP)

THIRD ANGLE PROJECTION

| | | | | | |
|---|---|---|---|---|---|
| SHEET NUMBER | | 1 / 1 | | | |
| GENERAL TOLERANCE | | | | | |
| CUSTOMER NUMBER | | | | | |
| SCALE 4.000 | DESIGN | JACKIE | JUN-28-18 | | |
| | CHECKED | MARK | Nov-22-17 | | |
| | APPROVED | JAMES | Nov-22-17 | P3 | March-07-19 CHRIS |
| DOCUMENT NUMBER SW0167N | PART VERSION P01 | DOCUMENT VERSION P3 | | P2 | Oct-26-18 Chris |
| | | | | P1 | JUN-28-18 JACKIE |
| | | | | MOD | DATE NAME |

Downloaded from Arrow.com.