CUI Devices is now Same Sky! Learn More

MODEL: PJ-002AH-SMT-TR | DESCRIPTION: DC POWER JACK

FEATURES

- high current rating: 5 A
- internal switch
- RoHS compliant



RoHS

SPECIFICATIONS

parameter	conditions/description	min	typ	max	units
rated input voltage			24		Vdc
rated input current				5.0	A
contact resistance				30	mΩ
insulation resistance	at 500 Vdc	100			MΩ
voltage withstand	for 1 minute			500	Vac
insertion/withdrawal force		0.3		3	kg
operating temperature		-25		85	°C
life			5,000		cycles
flammability rating	UL94V-0				
RoHS	yes				

SOLDERABILITY

parameter	conditions/description	min	typ	max	units
reel storage	-5~35°C, 25~80% humidity reel opened: use within 1 month reel unopened: use within 6 months				
reflow soldering	see reflow profile			260	°C

Note: 1. Same Sky recommends usage of the product within 2 hours after T&R is opened. After 6 hours, Same Sky recommends drying the parts prior to use.

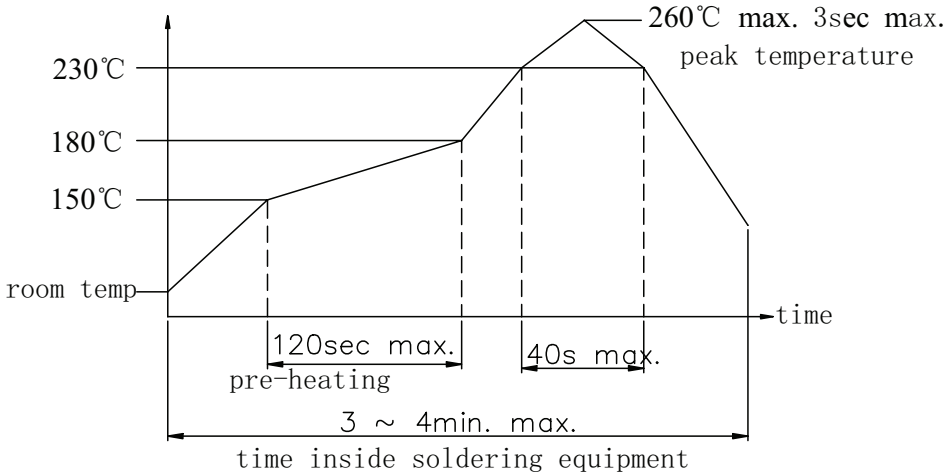

Downloaded from Arrow.com.

MECHANICAL DRAWING

units: mm
tolerance:
X. ±0.50 mm
X.X ±0.30 mm
X.XX ±0.20 mm
PCB: ±0.05 mm
unless otherwise specified
PCB thickness: 1.6 mm

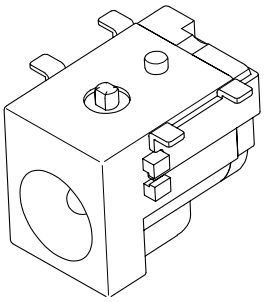

DESCRIPTION	MATERIAL	PLATING/COLOR
center pin	copper	nickel
terminal 1	brass	silver
terminal 2	copper alloy	silver
terminal 3	brass	silver
housing	PA10T (UL94V-0)	black
cover	PA10T (UL94V-0)	black

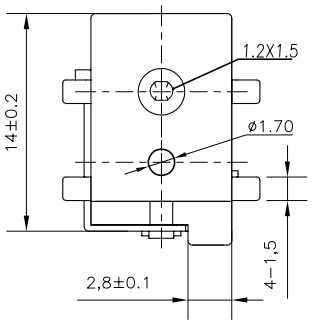

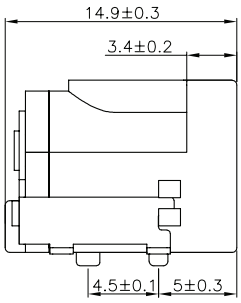

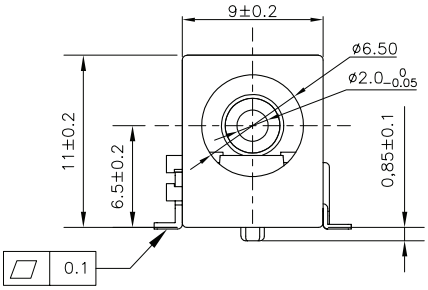

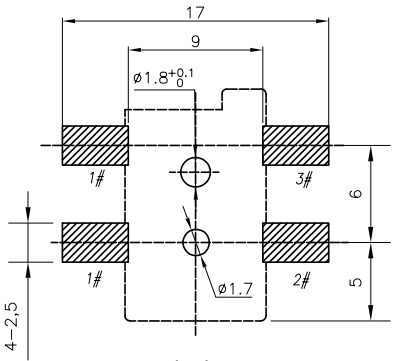

Recommended PCB Layout
Top View

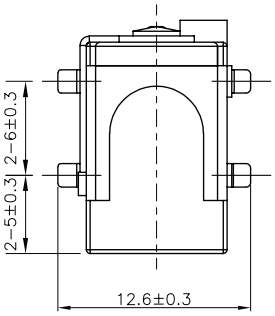

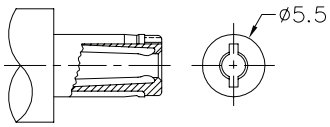

MATING PLUG
Jack Insertion Depth: 9.5 mm

SCHEMATIC	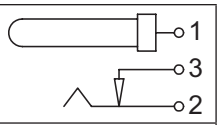
Model	PJ-002AH-SMT-TR
Center Pin	Ø2.0 mm

Downloaded from Arrow.com.

PACKAGING

units: mm

Reel Size: Ø330 mm
Reel QTY: 300 pcs per reel

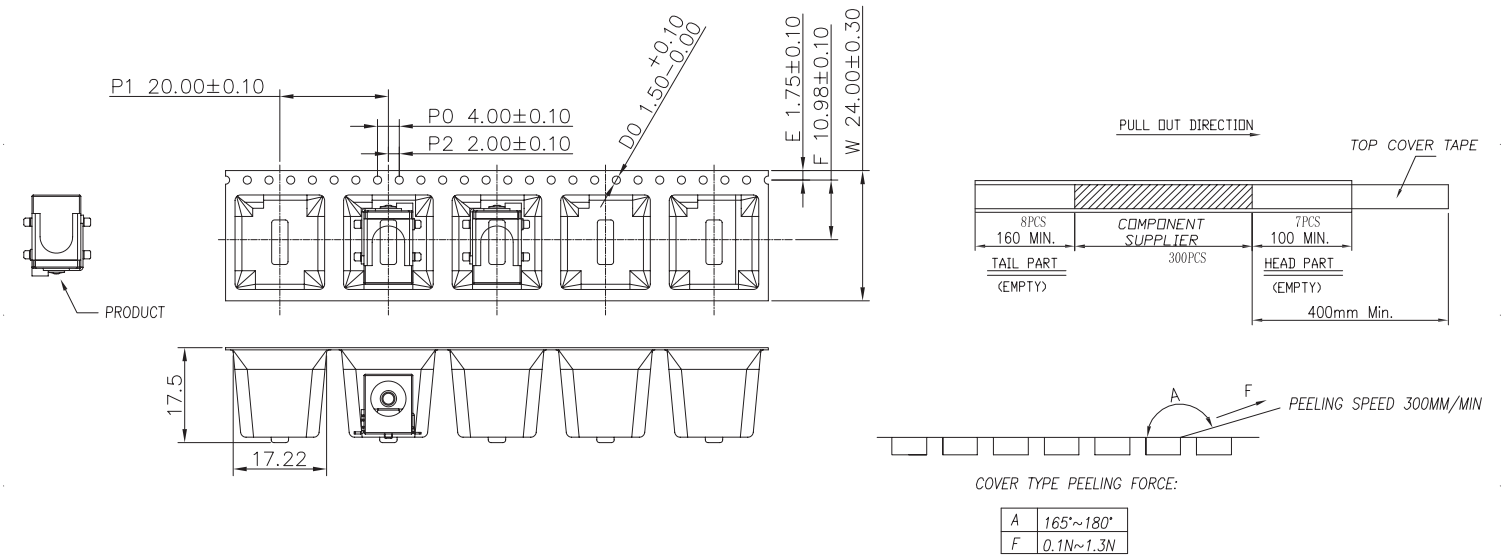

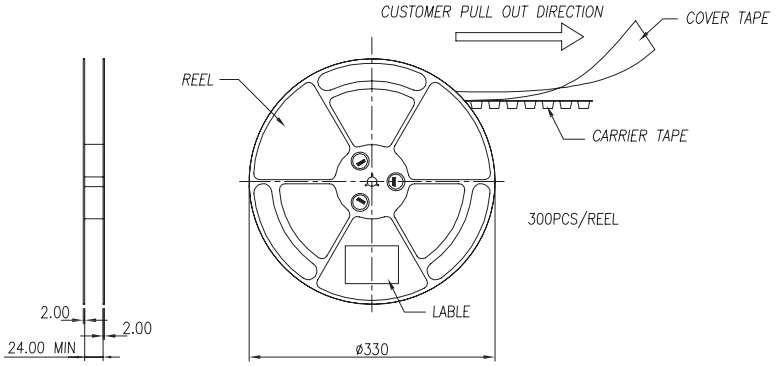

Downloaded from Arrow.com.

REVISION HISTORY

rev.	description	date
1.0	initial release	10/19/2005
1.01	updated operating temperature	06/17/2011
1.02	added jack insertion depth	09/13/2012
1.03	added TR package option	11/28/2012
1.04	increased voltage rating	04/28/2016
1.05	added storage and drying conditions, and tape and reel packaging details	10/13/2017
1.06	brand update	10/30/2019
1.07	logo, datasheet style update	08/05/2022
1.08	updated tape and reel packaging	06/19/2023
1.09	manufacturing improvement changes	08/29/2024
1.10	CUI Devices rebranded to Same Sky	09/12/2024

The revision history provided is for informational purposes only and is believed to be accurate.

same sky

Same Sky offers a one (1) year limited warranty. Complete warranty information is listed on our website.

Same Sky reserves the right to make changes to the product at any time without notice. Information provided by Same Sky is believed to be accurate and reliable. However, no responsibility is assumed by Same Sky for its use, nor for any infringements of patents or other rights of third parties which may result from its use.

Same Sky products are not authorized or warranted for use as critical components in equipment that requires an extremely high level of reliability. A critical component is any component of a life support device or system whose failure to perform can be reasonably expected to cause the failure of the life support device or system, or to affect its safety or effectiveness.

sameskydevices.com

Downloaded from Arrow.com.