Connector Location A

Connector Location B

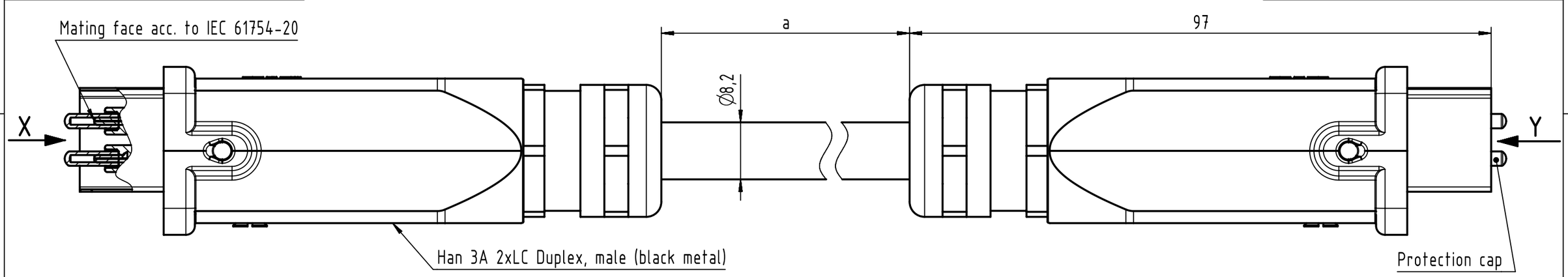

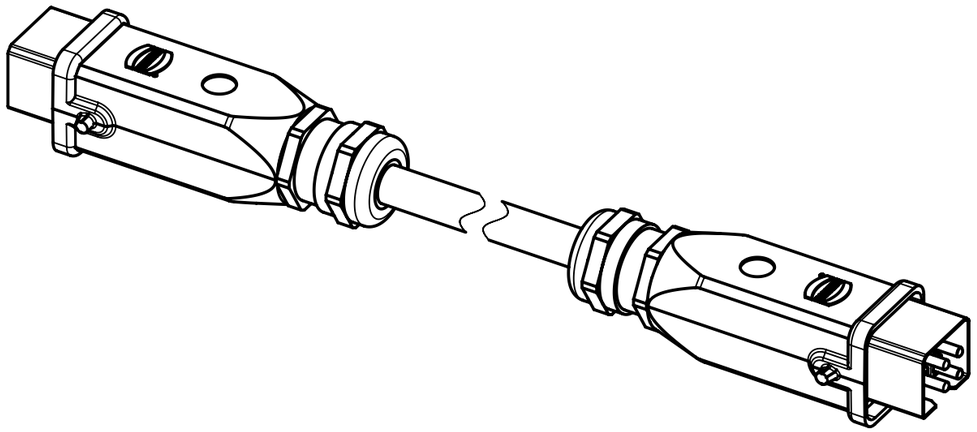

X
(without protection cap)

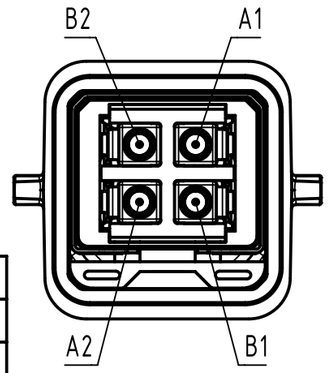

Loading-Plan

A1	grey 1 (interior turquoise)	B2
B1	grey 2 (interior white)	A2
A2	grey 3 (interior white)	B1
B2	grey 4 (interior white)	A1

Y
(without protection cap)

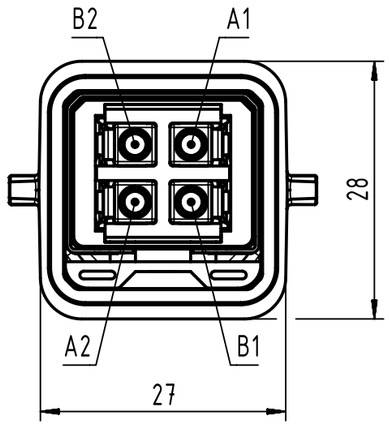

Cont. No.	Part - no.	Type of cable	Dim. a[m]
15	33542113000002	F.O. breakout cable multi-mode, 4-chanel, 4G50/125, black	300
14	33542111500002		150
13	33542111000002		100
12	33542110800002		80
11	33542110600002		60
10	33542110500002		50
9	33542110400002		40
8	33542110250002		25
7	33542110200002		20
6	33542110150002		15
5	33542110130002		13
4	33542110100002		10
3	33542110050002		5
2	33542120150002		1.5
1	33542110010002		1

-Protection level: IP67/65
-Temperature range: -20°C ... +60°C

All Dimensions in mm	Tech. Character.	Free size tol.	According to production drawing 2016-08-11

All rights reserved

Department HCS - RO

HARTING Customised Solutions
D-32427 Minden

Created by	Inspected by	Standardisation	Date	State
POPESCUD	MUNTEANV	AVRAM	2016-08-11	Final Release

Title: Han 3A LC Cable Assembly

Doc-Key / ECM-Nr.: 100178844/UGD/010/F 500000107593

Type: TB | Number: 335421XXXX0002 | Rev.: F | Page: 1/1

A3

Downloaded from Arrow.com.