Features

This LSI has following features.

■ CPU

- AndesCore™ AX45MP, single-core

  Max. operating frequency: 1.0 GHz

■ On-chip SRAM and external memory interfaces

- On-chip shared SRAM (128-Kbytes on-chip SRAM with ECC)
- External DDR memory interface

  1-channel memory controller for DDR3L-1333 or DDR4-1600 with a 16-bit bus width
- SPI Multi I/O Bus Controller × 1 channel (4-bit Double data rate)
- SD card host interface × 2 channels
- Multimedia card interface × 1 channel (Shared with SDHI)

■ Various communication/storage/network interfaces

- USB 2.0 × 2 channels (Host only 1 channel/Host-Function 1 channel)
- Gigabit Ethernet controller × 2 channels
- CANFD interface × 2 channels
- I^2C bus interface × 4 channels
- Serial communication interface (SCI) × 2 channels
- Serial communication interface with FIFO (SCIF) × 5 channels
- Serial Peripheral Interface (RSPI) × 3 channels

■ Extended-function timers

- Multi-Function Timer Pulse Unit

  32-bit × 1 channel, 16-bit × 8 channels

■ Audio

- Serial sound interface × 4 channels

■ Analog/Digital converter (ADC) and sensor

- 12-bit A/D converter × 2 channels
- Thermal Sensor Unit × 1 channel

■ Security

- Hardware cryptographic engine [option]

Downloaded from Arrow.com.

1. Overview

1.1 Outline of Specification

1.1.1 CPU Core

Item	Description
System CPU AX45MP	[RZ/Five] ● AndesCore™ AX45MP Single core 1.0 GHz ● L1 I-cache 32 Kbytes (Parity) / D-cache 32 Kbytes (ECC) ● ILM 64 Kbytes (ECC) / DLM 64 Kbytes (ECC), Total 128 Kbytes*1 ● L2 cache 256 KBytes (ECC) ● Floating point extension DSP/SIMD ISA ● AndeStar™ V5 Instruction Set Architecture (ISA) *Note 1.* The ILM and DLM are generally not used in Linux. Please refer also AndesCoreAX45MP-1C Processor Reference Manual for details.
Boot	[RZ/Five] ● 6 boot modes Boot Mode 0: Booting from eSD Boot Mode 1: Booting from eMMC (1.8 V) Boot Mode 2: Booting from eMMC (3.3 V) Boot Mode 3: Booting from a serial flash memory (Single / Quad) connected to the SPI Multi I/O bus space (1.8 V) Boot Mode 4: Booting from a serial flash memory (Single / Quad) connected to the SPI Multi I/O bus space (3.3 V) Boot Mode 5: Booting from SCIF download
Debug Interface	[RZ/Five] ● AndesCore™ AX45MP Debug Subsystem ● JTAG interface supported ● Embedded Debug Module with up to 8 triggers

Downloaded from Arrow.com.

1.1.2 CPU Peripheral

Item	Description
Clock Pulse Generator (CPG)	[RZ/Five] ● Generates the clocks from external clock (EXCLK 24 MHz). Maximum AndesCore™ AX45MP Single core clock: 1.0 GHz Maximum DDR clock: 666 MHz (DDR3L-1333), 800 MHz (DDR4-1600) Maximum AXI-bus clock: 200 MHz Maximum APB-bus clock: 100 MHz ● SSC (Spread Spectrum Clock) supported
Direct Memory Access Controller (DMAC)	[RZ/Five] ● 2 modules, 16 channels per module ● Transfer request: On-chip peripheral request / auto request (software trigger) ● A specific DMA transfer interval can be specified to adjust the bus occupancy. ● LINK mode (DMA transfer under descriptor control) supported ● Transfer information can be automatically reloaded
Platform-Level Interrupt Controller (PLIC)	[RZ/Five] ● Andes Platform-Level Interrupt Controller ● 255 priority levels available ● Software-programmable interrupt generation ● External Interrupt pins (NMI, IRQ7 to IRQ0, TINT31-0) ● On-chip peripheral Interrupts: priority level set for each module
General-purpose I/O (GPIO)	[RZ/Five] ● General-purpose I/O ports
Thermal Sensor Unit (TSU)	[RZ/Five] ● 1 channel

1.1.3 Internal Memory

Item	Description
System RAM	[RZ/Five] ● RAM of 128 Kbytes (ECC)

Downloaded from Arrow.com.

1.1.4 External Memory Interface

Item	Description
External Bus Controller for DDR3L / DDR4 SDRAM (DDR)	[RZ/Five] ● Support DDR3L-1333 / DDR4-1600 ● Bus Width: 16-bit ● In line ECC supported (Support error detection interrupt) ● Memory Size: Up to 4 Gbyes ● Auto Refresh supported
SPI Multi I/O Bus Controller	[RZ/Five] ● 1 channel (4-bit Double data rate) ● 1 serial flash memory with multiple I/O bus sizes (single / quad) can be connected ● External address space read mode (built-in read cache) ● SPI operation mode ● Maximum Clock Frequency: – 50 MHz (Quad-SPI DDR) – 66 MHz (Quad-SPI SDR)
SD Card Host Interface / Multimedia Card Interface (SD/MMC)	[RZ/Five] ● 2 channels ● Channel 0 supports SDHI / e-MMC (boot supported) ● Channel 1 supports SDHI ● SD memory I/O card interface (1-bit / 4-bit SD bus) ● SD, SDHC and SDXC SD memory card access supported ● Compliant with SD 3.0 ● Default, high-speed, UHS-I/SDR50, SDR104 transfer modes supported ● Error check function: CRC7 (Command), CRC16 (Data) ● Card detection function, write protect supported ● MMC interface (1-bit / 4-bit / 8-bit MMC bus) ● e-MMC device access supported ● Compliant with eMMC 4.51 ● High-speed, HS200 transfer modes supported

Downloaded from Arrow.com.

1.1.5 Sound Interface

Item	Description
Serial Sound Interface (SSI)	[RZ/Five] ● 4 channels bidirectional serial transfer ● 2 external clock sources available ● Duplex communication (channel 0, 1, and 3) ● Support of I2S / Monaural / TDM audio formats ● Support of master and slave functions ● Generation of programmable word clock and bit clock ● Multi-channel formats ● Support of 8, 16, 18, 20, 22, 24, and 32-bit data formats ● Support of 32-stage FIFO for transmission and reception ● Support of LR-clock continue function in which the LR-clock signal is not stopped

1.1.6 Storage and Network

Item	Description
USB2.0 Host / Function (USB)	[RZ/Five] ● 2 channels (ch0: Host-Function ch1: Host only) ● Compliance with USB2.0 ● Supports On-The-Go (OTG) Function ● Supports Battery Charging Function ● Internal dedicated DMA
Gigabit Ethernet Interface (GbE)	[RZ/Five] ● Number of channels – 2 channels: Support by 361-pin BGA – 1 channel: Support by 266-pin BGA ● Supports transfer at 1000 Mbps and 100 Mbps, 10 Mbps ● Supports filtering of Ethernet frames ● Supports interface conforming to IEEE802.3 PHY RGMII (Reduced Gigabit Media Independent Interface) ● Supports interface conforming to IEEE802.3 PHYMII (Media Independent Interface)
Controller Area Network Interface (CAN)	[RZ/Five] ● 2 channels ● ISO 11898-1 (2003) compliant ● CAN-FD ISO 11898-1 (CD2014) compliant ● Message buffer – Up to 64 × 2-channel receive message buffer: Shared among all channels – 16 transmit message buffers per channel

Downloaded from Arrow.com.

1.1.7 Timer

Item	Description
Multi-function Timer Pulse Unit 3 (MTU3a)	[RZ/Five] ● 9 channels (16 bits × 8 channels, 32 bits × 1 channel) ● Module clock frequency (P0ϕ): 100 MHz ● Maximum 28 lines of pulse inputs/outputs and 3 lines of pulse inputs ● 14 types of count clocks selectable ● Input capture function ● 39 outputs compare and input capture registers ● Counter clear operation (Simultaneous counter clearing by Compare match or Input capture is available) ● Simultaneous writing to multiple timer counters (TCNT) ● Synchronous input/output of each register due to synchronous operation of the counter ● Buffered operation ● Cascade-connected operation ● 43 types of interrupt sources ● Automatic transfer of register data ● Pulse output modes Toggle, PWM, complementary PWM, and reset-synchronized PWM modes ● Synchronization of multiple counters ● Phase counting mode – 16-bit mode (channel 1 and 2) – 32-bit mode (channel 1 and 2) ● Counter function of dead time compensation ● Digital filter functions for the input capture and external count clock pin
Port Output Enable 3 (POE3)	[RZ/Five] ● Control of the high-impedance state of the MTU3a waveform output pins ● Activation with four input pins ● Activation on detection of short-circuited outputs ● Activation by register write ● Additional programming of output control target pins is possible.
Watchdog Timer (WDT)	[RZ/Five] ● 1 channel ● A counter overflow can reset the LSI ● CPU parity error can reset the LSI
General Timer (GTM)	[RZ/Five] ● 32 bits × 3 channels ● Two operating modes – Interval timer mode – Free-running comparison mode

Downloaded from Arrow.com.

1.1.8 Peripheral Module

Item	Description
I2C Bus Interface (I2C)	[RZ/Five] ● 4 channels (ch0,1 = Dedicated pin, ch2,3 = Multiplexed pin) ● Master mode and slave mode supported ● Support for 7-bit and 10-bit slave address formats ● Support for multi-master operation ● Timeout detection
Serial Communication Interface with FIFO (SCIFA)	[RZ/Five] ● 5 channels ● Clock synchronous mode or asynchronous mode selectable ● Simultaneous transmission and reception (full-duplex communication) supported ● Dedicated baud rate generator ● Separate 16-byte FIFO registers for transmission and reception ● Modem control function (channel 0, 1, and 2 in asynchronous mode)
Serial Communication Interface (SCI)	[RZ/Five] ● 2 channels ● Clock synchronous mode, asynchronous mode, or smart card interface mode is selectable ● Simultaneous transmission and reception (full-duplex communication) supported ● Dedicated baud rate generator ● LSB first / MSB first selectable ● Modem control function ● Encoding and decoding of IrDA communications waveforms in accord with version 1.0 of the IrDA standard (on channel 0)
Renesas Serial Peripheral Interface (RSPI)	[RZ/Five] ● 3 channels ● SPI operation ● Master mode and slave mode supported ● Programmable bit length, clock polarity, clock phase can be selected ● Consecutive transfers ● LSB first / MSB first selectable

1.1.9 Security

Item	Description
Trusted Secure IP (TSIP) [option]	[RZ/Five] ● Security algorism – Common key encryption: AES – Non-common key encryption: RSA, ECC ● Other features – TRNG (true-random number generator) – Hash value generation: SHA-1, SHA-224, SHA-256, GHASH – Support of Unique ID
One Time Programmable memory (OTP)	[RZ/Five] ● A nonvolatile memory that can be written only once ● Security setting, authentication setting are possible ● Support one time read function (128 bytes)

Downloaded from Arrow.com.

1.1.10 Analog

Item	Description
A/D Converter (ADC)	[RZ/Five] ● 2 channels ● Resolution: 12-bit ● Input Range: 0 V ~ 1.8 V ● Conversion Time: 1 μs ● Operation Mode: Single Scan / Continuous Scan ● Condition for A/D conversion start – Software trigger – Asynchronous trigger: External trigger supported – Synchronous trigger: MTU timer

1.1.11 Others

Item	Description
Boundary Scan	[RZ/Five] ● Boundary scan based on IEEE 1149.1 via JTAG interface is supported. Note that some module pins are not available on this boundary scan.

1.1.12 Power Supply Voltage

Item	Description
Power supply voltage	[RZ/Five] ● V_{DD}, PLLn_DV_{DD11} (n = 23, 5): 1.05 to 1.15 V ● DDR_V_{DDQ}: 1.14 to 1.26 V (DDR4) / 1.283 to 1.45 V (DDR3L) ● V_{DD18}, ADC_AV_{DD18}, PLLn_AV_{DD18} (n = 1, 23, 4, 5, 6): 1.62 to 1.98 V ● OTP_V_{DD18}, USB_V_{DD18}: 1.65 to 1.95 V ● PV_{DD}: 2.97 to 3.63 V ● USB_V_{DD33}: 3.00 to 3.60 V ● SDn_PV_{DD} (n = 0, 1), SPI_PV_{DD}: 2.97 to 3.63 V / 1.70 to 1.95 V ● $PV_{DD182533}$: 2.97 to 3.63 V / 2.25 to 2.75 V / 1.62 to 1.98 V

1.1.13 Temperature Range

Item	Description
Temperature range	[RZ/Five] ● T_a: −40°C to +85°C*1 ● T_j: −40°C to +125°C

Note 1. If wider temp is required than this range, use case has to be investigated.

Downloaded from Arrow.com.

1.1.14 Quality level

Item	Description
Quality level	[RZ/Five] ● Industrial usage, etc.

1.1.15 Package

Item	Description
Package	[RZ/Five] ● 361-pin LFBGA, 13-mm square, 0.5-mm pitch ● 266-pin LFBGA, 11-mm square, 0.5-mm pitch

Downloaded from Arrow.com.

1.2 Block Diagram

The LSI internal bus of this LSI consists of the ACPU bus, MCPU bus, and system bus. **Figure 1.1** shows the configuration of the buses.

ACPU bus:

A bus connected to AX45MP, DDR memory controllers, image processing units, and Storage and Network

MCPU bus:

A bus connected to serial interface units

System bus:

A bus connected to the control registers of each unit

Downloaded from Arrow.com.

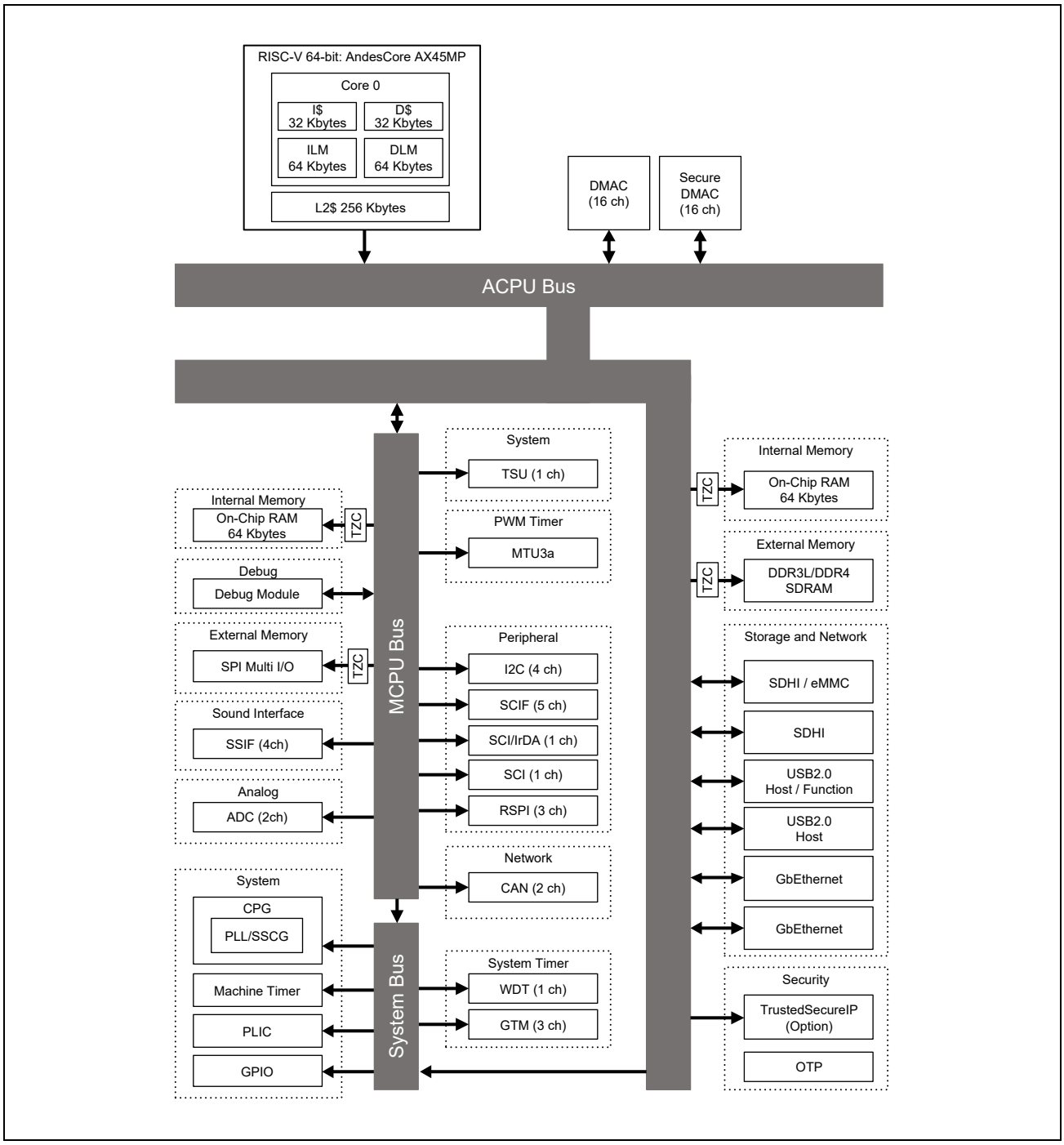

Figure 1.1 Configuration of LSI Internal Bus

Downloaded from Arrow.com.

1.3 Product Lineup

Table 1.1 Product Lineup

Group	Package	Part Number	Security*1
RZ/Five	13 mm BGA	R9A07G043F05GBG	Available
		R9A07G043F01GBG	Not supported
	11 mm BGA	R9A07G043F04GBG	Available
		R9A07G043F00GBG	Not supported

Note 1. The product with security function supports the following features.
— Trusted Secure IP
— Secure Boot
— Secure Debug
— HW Key protection
— True Random Generator

Downloaded from Arrow.com.

2. Pin

2.1 Pin Assignment

Refer to attached excel file for the “ball view” about pin assignment of this LSI.
(Please double-click the icon on the right side)

2.2 External Pins and Multiplexed Functional Pins

Refer to attached excel file for the “pn function list” about information of external pins and multiplexed functional pins of this LSI.
(Please double-click the icon on the right side)

Downloaded from Arrow.com.

3. Electrical Characteristics

3.1 Absolute Maximum Ratings

Table 3.1 Absolute Maximum Ratings

Item		Symbol	Value	Unit
Power supply voltage (3.3 V)		PV_{DD} USB_V_{DD33}	−0.5 to +3.8	V
Power supply voltage (1.8-V/3.3-V switchable)		$SD0_PV_{DD}$	−0.5 to +3.8	V
		$SD1_PV_{DD}$		
		SPI_PV_{DD}		
Power supply voltage (1.8-V/ 2.5-V/ 3.3-V switchable)		$PV_{DD182533_0/1}$	−0.5 to +3.8	V
Power supply voltage (1.8 V)		V_{DD18}	−0.5 to +2.5	V
		$PLL1_AV_{DD18}$		
		$PLL23_AV_{DD18}$		
		$PLL4_AV_{DD18}$		
		$PLL6_AV_{DD18}$		
		USB_V_{DD18}		
		ADC_AV_{DD18}		
		OTP_V_{DD18}		
DDR power supply voltage (DDR4/ DDR3L switchable)		DDR_V_{DDQ}	−0.5 to +2.5	V
Power supply voltage (1.1-V)		V_{DD}	−0.5 to +1.5	V
		$PLL23_DV_{DD11}$		
Input voltage	3.3-V I/O input pins	—	−0.3 to 3.3-V power supply (PV_{DD}, USB_V_{DD33}) + 0.3	V
	1.8-V/3.3-V switchable I/O input pins	—	−0.3 to 1.8-V/3.3-V switchable power supply ($SD0_PV_{DD}$, $SD1_PV_{DD}$, SPI_PV_{DD}) + 0.3	V
	1.8-V/2.5-V/3.3-V switchable I/O input pins	—	−0.3 to 1.8-V/2.5-V/3.3-V switchable power supply ($PV_{DD182533_0.1}$) + 0.3	V
	1.8-V I/O input pins	—	−0.3 to 1.8-V power supply (V_{DD18}, CSI_V_{DD18}, USB_V_{DD18}) + 0.3	V
Operating temperature	Ambient temperature	T_a	−40°C to +85°C*[1]	°C
	Junction temperature	T_j	−40°C to +125°C	°C
Storage temperature	Ambient temperature	T_{stg}	−40°C to +150°C	°C

Note 1. If wider temp is required than this range, use case has to be investigated.

Downloaded from Arrow.com.

3.2 Power Supply

Table 3.2 Power Supply

Item	Symbol	Min.	Typ.	Max.	Unit	Remarks
Power supply voltage (3.3 V)	PV_{DD}	2.97	3.30	3.63	V	—
Power supply voltage (1.8 V)	V_{DD18}, ADC_AV_{DD18}	1.62	1.80	1.98	V	—
	OTP_V_{DD18}	1.65	1.80	1.95	V	—
Power supply voltage (1.1 V)	V_{DD}	1.05	1.10	1.15	V	—
Power supply voltage (USB)	USB_V_{DD33}	3.00	3.30	3.60	V	—
	USB_V_{DD18}	1.65	1.80	1.95	V	—
Power supply voltage (SD)	$SD0_PV_{DD}$, $SD1_PV_{DD}$	2.97	3.30	3.63	V	When 3.3 V is supplied
		1.70	1.80	1.95	V	When 1.8 V is supplied
Power supply voltage (SPI)	SPI_PV_{DD}	2.97	3.30	3.63	V	When 3.3 V is supplied
		1.70	1.80	1.95	V	When 1.8 V is supplied
Power supply voltage (Ether)	$PV_{DD182533_0/1}$	2.97	3.30	3.63	V	When 3.3 V is supplied
		2.25	2.50	2.75	V	When 2.5 V is supplied
		1.62	1.80	1.98	V	When 1.8 V is supplied
Power supply voltage (DDR)	DDR_V_{DDQ}	1.14	1.20	1.26	V	When using DDR4
		1.283	1.35	1.45	V	When using DDR3L
Power supply voltage (PLL)	$PLL1_AV_{DD18}$, $PLL23_AV_{DD18}$, $PLL4_AV_{DD18}$, $PLL6_AV_{DD18}$	1.62	1.80	1.98	V	—
	$PLL23_DV_{DD11}$	1.05	1.10	1.15	V	—

Downloaded from Arrow.com.

3.3 Power-On/Power-Off Sequence

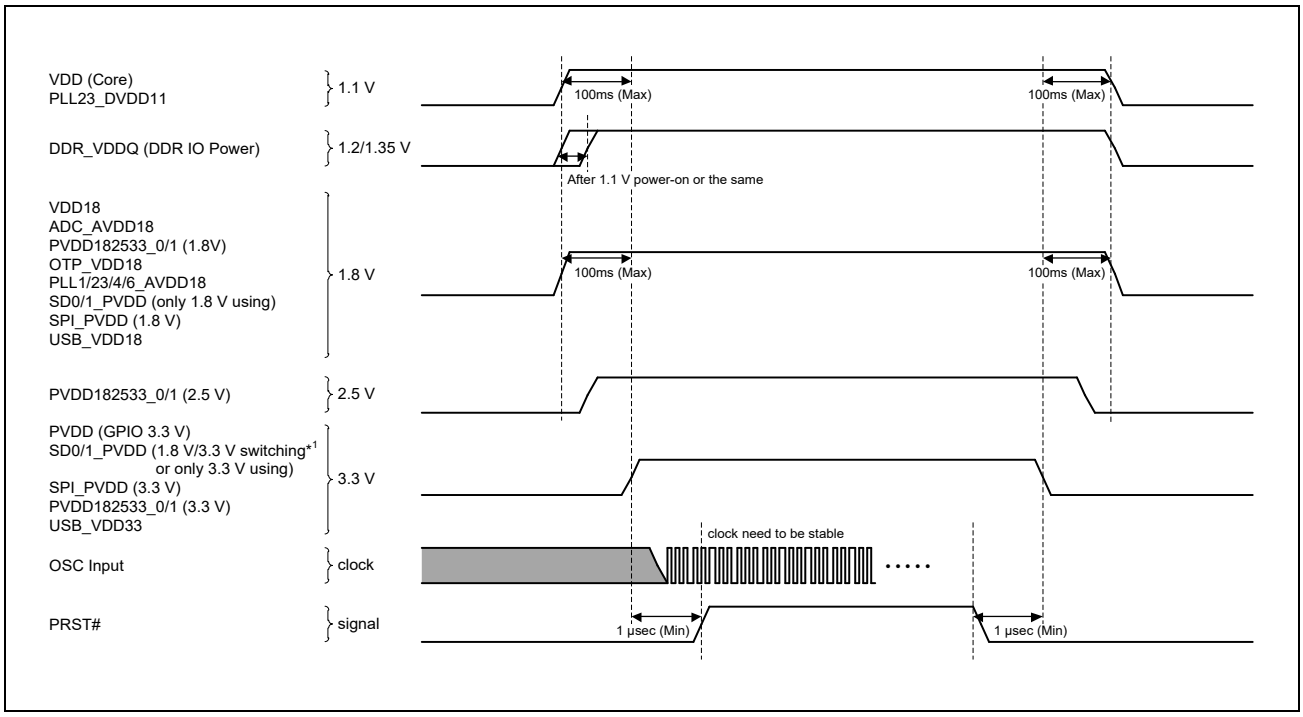

Figure 3.1 Power-On/Power-Off Sequence

NOTES

1. Turn on 3.3 V after 1.1 V/1.8 V.

   Note 1. About SD0/1_PV_{DD}, especially in the case of switching between 1.8 V and 3.3 V at same power rail, 1.8-V power-on/off timing can also follow 3.3-V power rail sequence as shown in the **Figure 3.1**.

2. Turn on the DDR IO power supply at the same time as or after the 1.1-V power supply.
3. From first power rising start to last power rising end must be within 100 ms.
4. The power-off sequence is the reverse of the power-on sequence
   (PRST# → Low ⇨ 3.3 V = OFF ⇨ Other = OFF)
5. PRST# should be changed from Low to High after the 3.3-V power supply is turned on, after 1 µsec, and after the input clock from the oscillator stabilizes.
6. Refer to SD0/1_PV_{DD} when connecting eMMC.

Downloaded from Arrow.com.

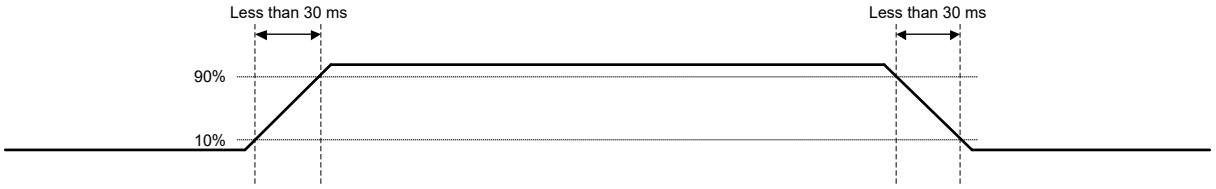

Note: The rise/fall time of each power supply should be within 30 msec.
Start point / end point of rising / falling time of each power supply should be 10% or 90% level of each power supply.

Figure 3.2 Power Up Time/Power Down Time (1)

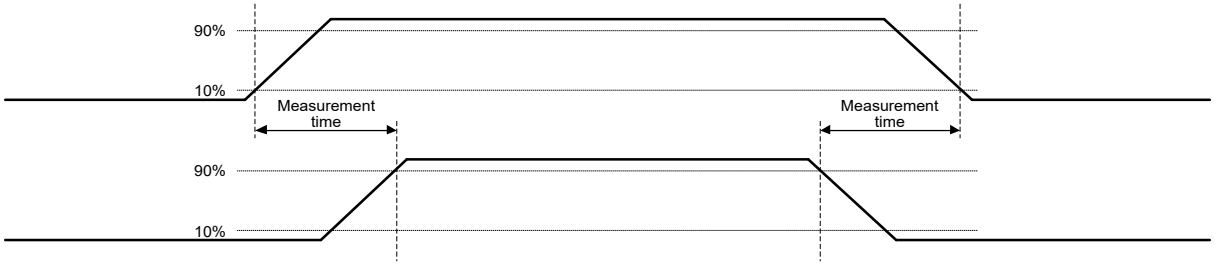

Note: In case of there is restriction of sequence between different power supply, measurement time is starting point that is 10% of earlier rising power voltage level to end point that is 90% of later rising power voltage level, and starting point that is 90% of earlier falling power voltage level to end point that is 10% of later falling power voltage level.

Figure 3.3 Power Up Time/Power Down Time (2)

Downloaded from Arrow.com.

3.4 DC Characteristics

Table 3.3 DC Characteristics (1) [3.3-V I/O]

Item		Symbol	Min.	Typ.	Max.	Unit	Remarks
High-level input voltage		V_{IH}	2	—	PV_{DD} + 0.3	V	
Low-level input voltage		V_{IL}	−0.3	—	0.8	V	
Hysteresis threshold ↑		V_T+	0.9	—	2.1	V	
Hysteresis threshold ↓		V_T−	0.7	—	1.9	V	
Input hysteresis voltage		V_{HYS}	0.306	—	0.420	V	
Output logic high voltage	(I_{OH} = –2mA)	V_{OH}	PV_{DD} – 0.4	—	PV_{DD}	V	
	(I_{OH} = –4mA)						
	(I_{OH} = –8mA)						
	(I_{OH} = –12mA)						
Output logic low voltage	(I_{OL} = 2mA)	V_{OL}	0	—	0.4	V	
	(I_{OL} = 4mA)						
	(I_{OL} = 8mA)						
	(I_{OL} = 12mA)						
Weak pull-up resistor (input mode)		R_{UP}	7K	—	100K	Ω	
Weak pull-down resistor (input mode)		R_{DN}	7K	—	100K	Ω	
Input leakage current		I_{LI}	—	—	5	μA	0V ≤ V_{in} ≤ PV_{DD} In case of 3state buffer, the leak current when output mode OFF

Note: V_{in} means input voltage of external input pin.

Note: Schmitt can be used at only RIIC mode.

Table 3.4 DC Characteristics (2) [1.8-V I/O]

Item		Symbol	Min.	Typ.	Max.	Unit	Remarks
High-level input voltage		V_{IH}	0.65 × V_{DD18}	—	V_{DD18} + 0.3	V	
Low-level input voltage		V_{IL}	−0.3	—	0.35 × V_{DD18}	V	
Output logic high voltage	(I_{OH} = –2mA)	V_{OH}	V_{DD18} – 0.4	—	V_{DD18}	V	
	(I_{OH}= –4mA)						
	(I_{OH} = –8mA)						
	(I_{OH} = –12mA)						
Output logic low voltage	(I_{OL} = 2mA)	V_{OL}	0	—	0.4	V	
	(I_{OL} = 4mA)						
	(I_{OL} = 8mA)						
	(I_{OL} = 12mA)						

Table 3.5 DC Characteristics (3) [3.3-V Input]

Item	Symbol	Min.	Typ.	Max.	Unit	Remarks
High-level input voltage	V_{IH}	2.3	—	PV_{DD} + 0.3	V	
Low-level input voltage	V_{IL}	−0.3	—	0.8	V	
Hysteresis threshold ↑	V_T+	0.9	—	2.1	V	
Hysteresis threshold ↓	V_T−	0.7	—	1.9	V	
Input hysteresis voltage	V_{HYS}	0.306	—	0.420	V	

Downloaded from Arrow.com.

Table 3.6 DC Characteristics (4) [1.8-V Input]

Item	Symbol	Min.	Typ.	Max.	Unit	Remarks
High-level input voltage	V_{IH}	0.65 × V_{DD18}	—	V_{DD18} + 0.3	V	
Low-level input voltage	V_{IL}	−0.3	—	0.35 × V_{DD18}	V	

Table 3.7 DC Characteristics (5) [RGMII/MII]

Item	Symbol	Min.	Typ.	Max.	Unit	Remarks
Power supply voltage	$PV_{DD182533_n}$	2.97	3.3	3.63	V	3.3-V RGMII/MII
Input logic high	V_{IH}	2.6	—	—	V	
Input logic low	V_{IL}	—	—	0.7	V	
Output logic high voltage @ 7.7 mA	V_{OH}	2.1	—	3.6	V	
Output logic low voltage @ 9.3 mA	V_{OL}	0	—	0.5	V	
Power supply voltage	$PV_{DD182533_n}$	2.25	2.5	2.75	V	2.5-V RGMII/MII
Input logic high	V_{IH}	1.9	—	—	V	
Input logic low	V_{IL}	—	—	0.7	V	
Output logic high voltage	V_{OH}	2.0	—	$PV_{DD182533_n}$	V	
Output logic low voltage	V_{OL}	V_{SS}	—	0.4	V	
Power supply voltage	$PV_{DD182533_n}$	1.62	1.8	1.98	V	1.8-V RGMII/MII
Input logic high	V_{IH}	0.7 × $PV_{DD182533_n}$	—	$PV_{DD182533_n}$ + 0.3	V	
Input logic low	V_{IL}	V_{SS} − 0.3	—	0.3 × $PV_{DD182533_n}$	V	
Output logic high @ I_{OH} = 100 μA	V_{OH}	0.85 × $PV_{DD182533_n}$	—	$PV_{DD182533_n}$	V	
Output logic low @ I_{OL} = 100 μA	V_{OL}	V_{SS}	—	0.15 × $PV_{DD182533_n}$	V	

Note: n = 0, 1

Table 3.8 DC Characteristics (6) [3.3 V I/O (SD, QSPI)]

Item		Symbol	Min.	Typ.	Max.	Unit	Remarks
High-level input voltage		V_{IH}	0.625 × SDn_PV_{DD}	—	SDn_PV_{DD} + 0.3	V	
Low-level input voltage		V_{IL}	SDn_PV_{DD} − 0.3	—	0.25 × SDn_PV_{DD}	V	
Output logic high voltage	(× 0.5)	V_{OH}	0.75 × SDn_PV_{DD}	—	SDn_PV_{DD}	V	
	(× 0.75)						
	(× 1.0)						
	(× 1.5)						
Output logic low voltage	(× 0.5)	V_{OL}	0	—	0.125 × SDn_PV_{DD}	V	
	(× 0.75)						
	(× 1.0)						
	(× 1.5)						

Downloaded from Arrow.com.

Table 3.9 DC Characteristics (7) [1.8 V I/O (SD, QSPI)]

Item		Symbol	Min.	Typ.	Max.	Unit	Remarks
High-level input voltage		V_{IH}	1.27	—	2.00	V	
Low-level input voltage		V_{IL}	SDn_PV_{DD} − 0.3	—	0.58	V	
Output logic high voltage	(× 0.5)	V_{OH}	0.8 × SDn_PV_{DD}	—	SDn_PV_{DD}	V	
	(× 0.75)						
	(× 1.0)						
	(× 1.5)						
Output logic low voltage	(× 0.5)	V_{OL}	0	—	0.2 × SDn_PV_{DD}	V	
	(× 0.75)						
	(× 1.0)						
	(× 1.5)						

Table 3.10 DC Characteristics(8) [I^2C Open Drain 3.3 V I/O]

Item	Symbol	Min.	Typ.	Max.	Unit	Remarks
External pull-up supply	V_{VDDP}	2.7	—	PV_{DD}	V	
Input high voltage	V_{IH}	0.7 × V_{VDDP}	—	V_{VDDP} + 0.5	V	
Input Low Voltage	V_{IL}	−0.5	—	0.3 × V_{VDDP}	V	
Low level output current	I_{OL}	20	—	—	mA	V_{OL} = 0.4 V
Low level output voltage	V_{OL}	—	—	0.4	V	V_{VDDP} > 2 V
Input hysteresis	V_{HYST}	0.1 × V_{VDDP}	—	—	mV	

Table 3.11 DC Characteristics (9) [1.2-V Input (DDR4)]

Item	Symbol	Min.	Typ.	Max.	Unit	Remarks
DC input high level	V_{IH}(DC)	V_{REF} + 0.068	—	—	V	
DC input low level	V_{IL}(DC)	—	—	V_{REF} − 0.068	V	
AC input high level	V_{IH}(AC)	V_{REF} + 0.093	—	—	V	
AC input Low level	V_{IL}(AC)	—	—	V_{REF} − 0.093	V	
DC differential input high	V_{IHdiff}	0.136	—	—	V	
DC differential input low	V_{ILdiff}	—	—	−0.136	V	
AC differential input high	V_{IHdiff}(AC)	2 × (V_{IH}(AC) − V_{REF})	—	—	V	
AC differential input low	V_{ILdiff}(AC)	—	—	2 × (V_{REF} − V_{IL}(AC))	V	
Differential input cross point voltage relative to 0.8 × V_{DDIO} for DQS	V_{IX}(DQS)	−0.15	—	0.06	V	

Downloaded from Arrow.com.

Table 3.12 DC Characteristics (10) [1.35-V Input (DDR3L)]

Item	Symbol	Min.	Typ.	Max.	Unit	Remarks
DC input high level	V_{IH}(DC)	V_{REF} + 0.09	—	—	V	
DC input low level	V_{IL}(DC)	—	—	V_{REF} − 0.09		V_{REF} =0.5 x DDR_V_{DDQ}
AC input high level	V_{IH}(AC)	V_{REF} + 0.135	—	—	V	
AC input low level	V_{IL}(AC)	—	—	V_{REF} − 0.135	V	V_{REF} =0.5 x DDR_V_{DDQ}
DC differential input high	V_{IHdiff}	0.18	—	—	V	
DC differential input low	V_{ILdiff}	—	—	−0.18	V	
AC differential input high	V_{IHdiff}(AC)	2 × (V_{IH}(AC) − V_{REF})	—	—	V	
AC differential input low	V_{ILdiff}(AC)	—	—	2 × (V_{REF} − V_{IL}(AC))	V	V_{REF} =0.5 x DDR_V_{DDQ}
Differential input cross point voltage relative to 0.5 × DDR_VDDQ for DQS	V_{IX}(DQS)	−0.075	—	0.075	V	

Table 3.13 DC Characteristics (11) [1.2-V Output (DDR4)]

Item	Symbol	Min.	Typ.	Max.	Unit	Remarks
DC output high measurement level (for IV curve linearity)	V_{OH}(DC)	—	1.1 × DDR_V_{DDQ}	—	V	The swing of ± 0.15 × DDR_V_{DDQ} is based on approximately 50% of the static single-ended output peak-to-peak swing with a driver impedance of 40Ω and an effective test load of 50Ω to V_{TT} = DDR_V_{DDQ}.
DC output mid measurement level (for IV curve linearity)	V_{OM}(DC)	—	0.8 × DDR_V_{DDQ}	—	V	
DC output low measurement level (for IV curve linearity)	V_{OL}(DC)	—	0.5 × DDR_V_{DDQ}	—	V	
AC output high measurement level (for output slew rate)	V_{OH}(AC)	—	0.85 × DDR_V_{DDQ}	—	V	
AC output low measurement level (for output slew rate)	V_{OL}(AC)	—	0.55 × DDR_V_{DDQ}	—	V	

Table 3.14 DC Characteristics (12) [1.35-V Output (DDR3L)]

Item	Symbol	Min.	Typ.	Max.	Unit	Remarks
DC output high measurement level (for IV curve linearity)	V_{OH}(DC)	—	0.8 × DDR_V_{DDQ}	—	V	The swing of ± 0.1 × DDR_V_{DDQ} is based on approximately 50% of the static single-ended output high or low swing with a driver impedance of 40Ω and an effective test load of 25Ω to V_{TT} = DDR_V_{DDQ}/2.
DC output mid measurement level (for IV curve linearity)	V_{OM}(DC)	—	0.5 × DDR_V_{DDQ}	—	V	
DC output low measurement level (for IV curve linearity)	V_{OL}(DC)	—	0.2 × DDR_V_{DDQ}	—	V	
AC output high measurement level (for output slew rate)	V_{OH}(AC)	—	VTT + 0.1 × DDR_V_{DDQ}	—	V	
AC output low measurement level (for output slew rate)	V_{OL}(AC)	—	VTT − 0.1 × DDR_V_{DDQ}	—	V	

Table 3.15 DC Characteristics (13) [DDR4 Cross Point Voltage for Differential Output Signals (CK/DQS)]

Item	Symbol	Min.	Typ.	Max.	Unit	Remarks
Differential output cross point voltage relative to 0.67 × DDR_VDDQ	V_{OX}(CK/DQS)	−0.06	—	0.06	V	

Downloaded from Arrow.com.

Table 3.16 DC Characteristics (14) [DDR3L Cross Point Voltage For Differential Output Signals (CK/DQS)]

Item	Symbol	Min.	Typ.	Max.	Unit	Remarks
Differential output cross point voltage relative to 0.5 × DDR_VDDQ	V_{OX}(CK/DQS)	−0.1	—	0.1	V	

Table 3.17 DC Characteristics (15) [USB 2.0]

Item	Symbol	Min.	Typ.	Max.	Unit	Remarks
Input levels for low/full speed						
High (driven)	V_{IH}	2.0	—	—	V	
Low	V_{IL}	—	—	0.8	V	
Differential input sensitivity	V_{DI}	0.2	—	—	V	
Differential common mode range	V_{CM}	0.8	—	2.5	V	
Input levels for high speed						
High-speed squelch detection threshold (differential signal amplitude)	V_{HSSQ}	100	—	150	mV	
High-speed data signaling common mode voltage range (guideline for receiver)	V_{HSCM}	−50	—	500	mV	
Output levels for low/full speed						
Low	V_{OL}	0.0	—	0.3	V	
High (driven)	V_{OH}	2.8	—	3.6	V	
Output signal crossover voltage	V_{CRS}	1.3	—	2.0	V	
Output levels for high-speed						
High-speed idle level	V_{HSOI}	−10.0	—	10.0	mV	
High-speed data signaling high	V_{HSOH}	360	—	440	mV	
High-speed data signaling low	V_{HSOL}	−10.0	—	10.0	mV	
Chirp J level (differential voltage)	V_{CHIRPJ}	700	—	1100	mV	
Chirp K level (differential voltage)	V_{CHIRPK}	−900	—	−500	mV	

Table 3.18 DC Characteristics (16) [ADC]

Item	Symbol	Min.	Typ.	Max.	Unit	Remarks
Resolution	—	—	12	—	Bit	
Analog input channel	—	—	—	2	Channel	
Analog input range	AIN	V_{SS}	—	ADC_AV_{DD18}	V	
Differential non-linearity	DNL	—	—	±3.0	LSB	
Integral non-linearity	INL	—	—	±6.0	LSB	
Full-scale error	—	—	±10	±20	LSB	
Offset error	—	—	±10	±20	LSB	
Analog input capacitance	C_{IN}	—	—	12.5	pF	
Analog input resistance	R_{IN}	—	—	1754	Ω	
External capacitance	C_{EXT}	—	—	(*1)	pf	
External resistance	R_{EXT}	—	—	(*1)	Ω	

Note 1. Refer to **Figure 3.4** for Cext and Rext.
The Cext and Rext need to satisfy the sampling time.
A/D conversion time = sampling time (6T to 2800T) + 14T.
T stands for the cycle of ADIVCLK (20 MHz).
If A/D conversion is performed with the minimum conversion time, the sampling time must be 6T.
(Minimum conversion time per channel is 1 μs when A/D conversion clock ADIVCLK is 20 MHz.)

Downloaded from Arrow.com.

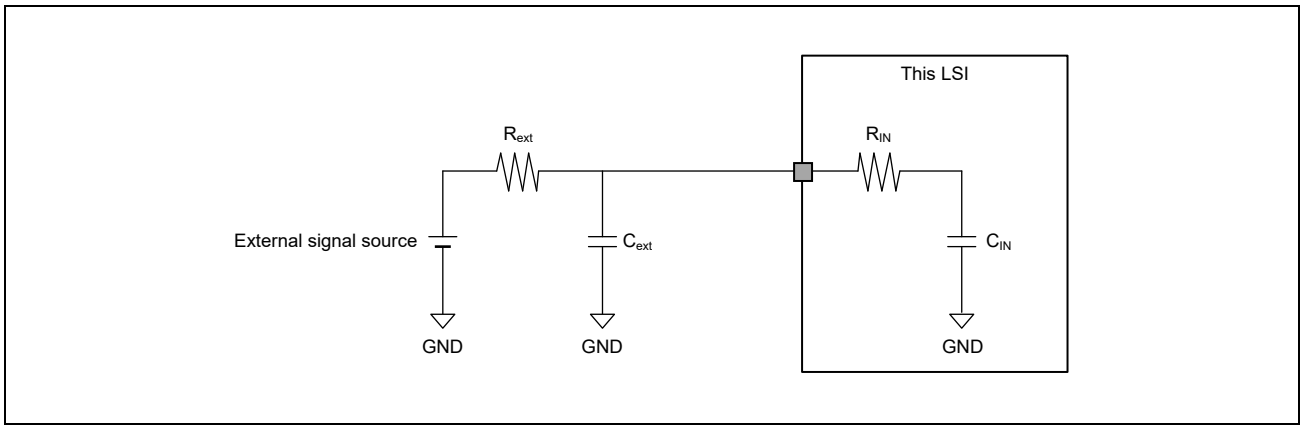

Figure 3.4 Analog Input Equivalent Circuit

Downloaded from Arrow.com.

Table 3.19 DC Characteristics (17) [Current Consumption]

Item	Power rail symbol	Max Current	Unit	Remarks
Power Supply voltage(3.3V)	PV_{DD}	430	mA	PV_{DD}=3.6V
Power Supply voltage(1.8V)	V_{DD18}	20	mA	V_{DD18}=1.98V
	OTP_AV_{DD18}	20	mA	OTP_V_{DD18}=1.95V
	ADC_AV_{DD18}	10	mA	ADC_AV_{DD18}=1.98V
Power Supply voltage(1.1V)	V_{DD}	2010	mA	V_{DD}=1.15V, Condition: AX45MP, Dhrystone
Power supply voltage (USB/3.3V)	USB_V_{DD33}	20	mA	USB_V_{DD33}=3.6V
Power supply voltage (USB/1.8V)	USB_V_{DD18}	140	mA	USB_V_{DD18}=1.95V
Power supply voltage (SD/3.3V)	$SD0_PV_{DD}$	260	mA	$SD0_PV_{DD}$=3.63V
	$SD1_PV_{DD}$	170	mA	$SD1_PV_{DD}$=3.63V
Power supply voltage (SD/1.8V)	$SD0_PV_{DD}$	110	mA	$SD0_PV_{DD}$=1.95V
	$SD1_PV_{DD}$	70	mA	$SD1_PV_{DD}$=1.95V
Power supply voltage (SPI/3.3V)	SPI_PV_{DD}	50	mA	SPI_PV_{DD}=3.63V
Power supply voltage (SPI/1.8V)	SPI_PV_{DD}	100	mA	SPI_PV_{DD}=1.95V
Power supply voltage (Ether/3.3V)	$PV_{DD182533_n}$	380	mA	$PV_{DD182533_n}$=3.63V when 2 channels are in use
Power supply voltage (Ether/2.5V)	$PV_{DD182533_n}$	240	mA	$PV_{DD182533_n}$=2.75V when 2 channels are in use
Power supply voltage (Ether/1.8V)	$PV_{DD182533_n}$	140	mA	$PV_{DD182533_n}$=1.98V when 2 channels are in use
Power supply voltage (DDR/1.2V)	DDR_V_{DDQ}	220	mA	DDR_V_{DDQ}=1.26V
Power supply voltage (DDR/1.35V)	DDR_V_{DDQ}	210	mA	DDR_V_{DDQ}=1.45V
Power supply voltage (PLL/1.8V)	$PLL1_AV_{DD18}$	10	mA	$PLL1_AV_{DD18}$=1.98V
	$PLL23_AV_{DD18}$	20	mA	$PLL23_AV_{DD18}$=1.98V
	$PLL4_AV_{DD18}$	10	mA	$PLL4_AV_{DD18}$=1.98V
	$PLL6_AV_{DD18}$	10	mA	$PLL6_AV_{DD18}$=1.98V
Power supply voltage (PLL/1.1V)	$PLL23_DV_{DD11}$	20	mA	$PLL23_DV_{DD11}$=1.15V

Note: T_j = 125°C, n = 0, 1

Downloaded from Arrow.com.

3.5 AC Characteristics

Conditions: V_{DD} = PLL23_DV_{DD11} = 1.1 ± 0.05 V,
PLL1_AV_{DD18} = PLL23_AV_{DD18} = PLL4_AV_{DD18} = PLL6_AV_{DD18} = 1.8 ± 0.18 V,
ADC_AV_{DD18} = V_{DD18} = 1.8 ± 0.18 V, OTP_V_{DD18} = 1.8 V ± 0.15 V,
USB_V_{DD18} = 1.8 ± 0.15 V,
PV_{DD} = 3.3 ± 0.33 V, USB_V_{DD33} = 3.3 ± 0.3 V, DDR_V_{DDQ} = 1.2 ± 0.06 V/1.283 to 1.45 V,
SPI_PV_{DD} = SDn_PV_{DD} (n = 0, 1) = 3.3 ± 0.33 V/1.70 to 1.95 V,
$PV_{DD182533_n}$ (n = 0, 1) = 3.3 ± 0.33 V/2.5 ± 0.25 V/1.8 ± 0.18 V, V_{SS} = 0 V,
T_a = −40 to +85°C, T_j = −40 to +125°C

3.5.1 Clock Timing

Table 3.20 Clock Timing Table

Item	Symbol	Min.	Max.	Unit	Figures
EXCLK clock input frequency	f_{EX}	24 – 50ppm*1	24 + 50ppm*1	MHz	**Figure 3.5**
EXCLK clock input cycle time	t_{EXcyc}	41.67	41.67	ns	
AUDIO_CLK1, AUDIO_CLK2 clock input frequency (external clock is input)	f_{EX}	10	50	MHz	
AUDIO_CLK1, AUDIO_CLK2 clock input cycle time (external clock is input)	t_{EXcyc}	20	100	ns	
EXCLK, AUDIO_CLK1, AUDIO_CLK2 clock input low level pulse width	t_{EXL}	0.4	0.6	t_{EXcyc}	
EXCLK, AUDIO_CLK1, AUDIO_CLK2 clock input high level pulse width	t_{EXH}	0.4	0.6	t_{EXcyc}	
EXCLK, AUDIO_CLK1, AUDIO_CLK2 clock input rise time	t_{EXr}	—	4	ns	
EXCLK, AUDIO_CLK1, AUDIO_CLK2 clock input fall time	t_{EXf}	—	4	ns	
Oscillator stabilization time	t_{OSC}	—	1	ms	**Figure 3.6**, **Figure 3.7**
Mode hold time	t_{MDH}	—	100	ns	
Mode setup time	t_{MDS}	—	100	ns	

Note 1. When using RGMII interface. If not using RGMII mode, this spec is ±100 ppm.

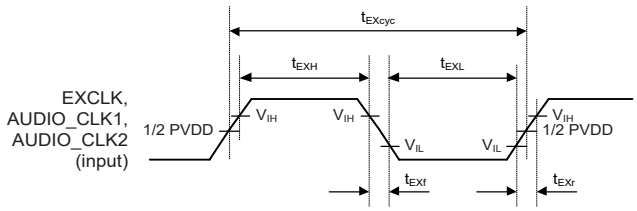

Note: When the clock is input on the EXCLK, AUDIO_CLK1 or AUDIO_CLK2

Figure 3.5 EXCLK, AUDIO_CLK1 and AUDIO_CLK2 Clock Input Timing

Downloaded from Arrow.com.

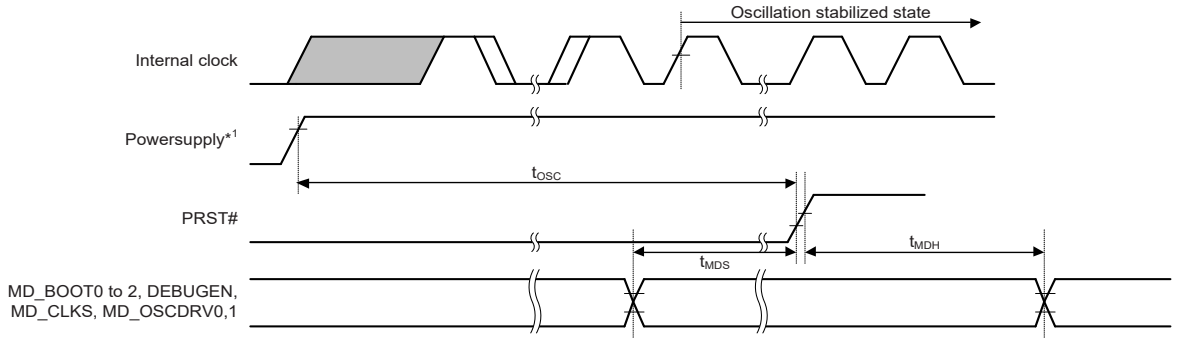

Note 1.

V_{DD}, $PLL23_DV_{DD11}$, $PLL1_AV_{DD18}$, $PLL23_AV_{DD18}$, $PLL4_AV_{DD18}$, $PLL6_AV_{DD18}$, ADC_AV_{DD18}, V_{DD18}, OTP_V_{DD18}, USB_V_{DD18}, PV_{DD},USB_V_{DD33}, DDR_V_{DDQ}, SPI_PV_{DD}, $SD0_PV_{DD}$, $SD1_PV_{DD}$, $PV_{DD182533}_0$, $PV_{DD182533}_1$

Figure 3.6 Power-On Oscillation Settling Time

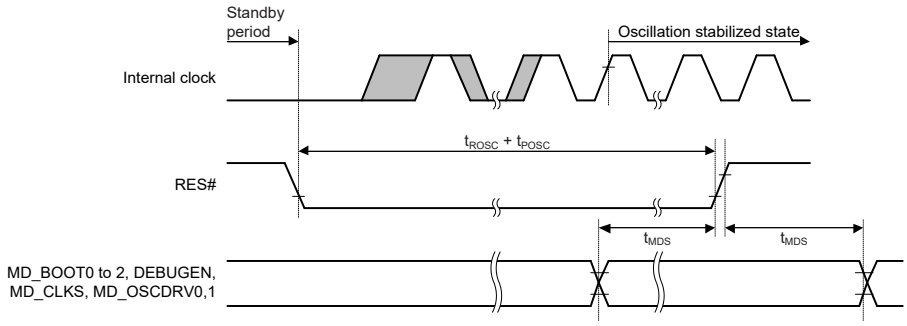

Note: Oscillation setting time when the internal oscillator is used.

Figure 3.7 Oscillation Settling Time on Return from Standby (Return by Reset)

Downloaded from Arrow.com.

3.5.2 SDHI Access Timing

3.5.2.1 SDHI Access Timing (SDR 3.3-V)

Table 3.21 SDHC AC Access Timing (SDR at 3.3-V Operation)

Item	Symbol	Default Speed Mode (16.67 MHz)		High Speed Mode (33.33 MHz)		Unit	Figures
		Min.	Max.	Min.	Max.		
SD_CLK clock cycle	t_{SDCYC}	60.00	—	30.0	—	ns	**Figure 3.8**
SD_CLK clock high level width	t_{SDWH}	23.50	—	13.50	—	ns	
SD_CLK clock low level width	t_{SDWL}	23.50	—	13.50	—	ns	
SD_CLK clock rise time	t_{SDLH}	—	10	—	3	ns	
SD_CLK clock fall time	t_{SDHL}	—	10	—	3	ns	
SD_CMD,SD_DATA output delay	t_{SDODLY}	−4.50	4.0	−4.50	4.0	ns	
SD_CMD,SD_DATA input set up time	t_{SDIS}	5.5	—	5.5	—	ns	
SD_CMD,SD_DATA input hold time	t_{SDIH}	2.0	—	2.0	—	ns	
SD_CMD,SD_DATA input data width	t_{SDIDW}	—	—	—	—	ns	

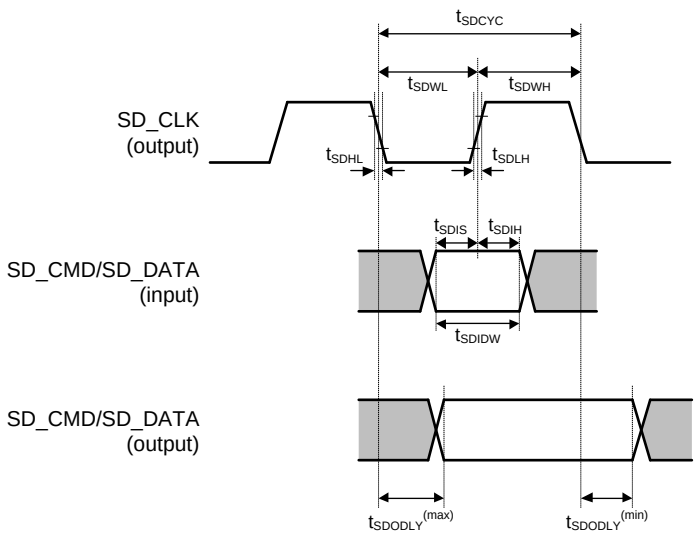

Figure 3.8 SDHC Interface Timing (SDR 3.3-V Power Supply)

NOTE

The disclosure of other characteristics of the SD interface needs the conclusion of the following agreement.

- SD Host/Ancillary Product License Agreement (SD HALA)

For details, contact your local sales representatives.

Downloaded from Arrow.com.

3.5.3 eMMC Access Timing

3.5.3.1 eMMC Host Interface Timing (Default)

Table 3.22 eMMC Host Interface Timing (MMC Default 3.3-V Power Supply)

Item	Symbol	Min.	Max.	Unit	Figures
SD0_CLK clock cycle	t_{MMCPP}	40.00	—	ns	**Figure 3.9**
SD0_CLK clock high level width	t_{MMCWH}	18.50	—	ns	
SD0_CLK clock low level width	t_{MMCWL}	18.50	—	ns	
SD0_CLK clock rise time	t_{MMCLH}	—	3	ns	
SD0_CLK clock fall time	t_{MMCHL}	—	3	ns	
SD0_CMD/SDDAT output delay	$t_{MMCODLY}$	−4.50	4.0	ns	
SD0_CMD/SDDAT input set up time	t_{MMCISU}	5.5	—	ns	
SD0_CMD/SDDAT input hold time	t_{MMCIH}	2.0	—	ns	
SD0_CMD/SDDAT input data width	t_{MMCIDW}	—	—	ns	

Table 3.23 eMMC Host Interface Timing (MMC Default 1.8-V Power Supply)

Item	Symbol	Min.	Max.	Unit	Figures
SD0_CLK clock cycle	t_{MMCPP}	40.00	—	ns	**Figure 3.9**
SD0_CLK clock high level width	t_{MMCWH}	19.25	—	ns	
SD0_CLK clock low level width	t_{MMCWL}	19.25	—	ns	
SD0_CLK clock rise time	t_{MMCLH}	—	2.45	ns	
SD0_CLK clock fall time	t_{MMCHL}	—	2.45	ns	
SD0_CMD/SDDAT output delay	$t_{MMCODLY}$	−2.00	2.50	ns	
SD0_CMD/SDDAT input set up time	t_{MMCISU}	4.00	—	ns	
SD0_CMD/SDDAT input hold time	t_{MMCIH}	1.40	—	ns	
SD0_CMD/SDDAT input data width	t_{MMCIDW}	—	—	ns	

Downloaded from Arrow.com.

3.5.3.2 eMMC host interface timing (HS-SDR)

Table 3.24 eMMC Host Interface Timing (MMC HS-SDR 3.3-V Power Supply)

Item	Symbol	Min.	Max.	Unit	Figures
SD0_CLK clock cycle	t_{MMCPP}	30.00	—	ns	**Figure 3.9**
SD0_CLK clock high level width	t_{MMCWH}	13.50	—	ns	
SD0_CLK clock low level width	t_{MMCWL}	13.50	—	ns	
SD0_CLK clock rise time	t_{MMCLH}	—	3	ns	
SD0_CLK clock fall time	t_{MMCHL}	—	3	ns	
SD0_CMD/SDDAT output delay	$t_{MMCODLY}$	−4.50	4.0	ns	
SD0_CMD/SDDAT input set up time	t_{MMCISU}	5.5	—	ns	
SD0_CMD/SDDAT input hold time	t_{MMCIH}	2.0	—	ns	
SD0_CMD/SDDAT input data width	t_{MMCIDW}	—	—	ns	

Table 3.25 eMMC Host Interface Timing (MMC HS-SDR 1.8-V Power Supply)

Item	Symbol	Min.	Max.	Unit	Figures
SD0_CLK clock cycle	t_{MMCPP}	20.00	—	ns	**Figure 3.9**
SD0_CLK clock high level width	t_{MMCWH}	9.25	—	ns	
SD0_CLK clock low level width	t_{MMCWL}	9.25	—	ns	
SD0_CLK clock rise time	t_{MMCLH}	—	2.45	ns	
SD0_CLK clock fall time	t_{MMCHL}	—	2.45	ns	
SD0_CMD/SDDAT output delay	$t_{MMCODLY}$	−2.00	2.50	ns	
SD0_CMD/SDDAT input set up time	t_{MMCISU}	4.00	—	ns	
SD0_CMD/SDDAT input hold time	t_{MMCIH}	1.40	—	ns	
SD0_CMD/SDDAT input data width	t_{MMCIDW}	—	—	ns	

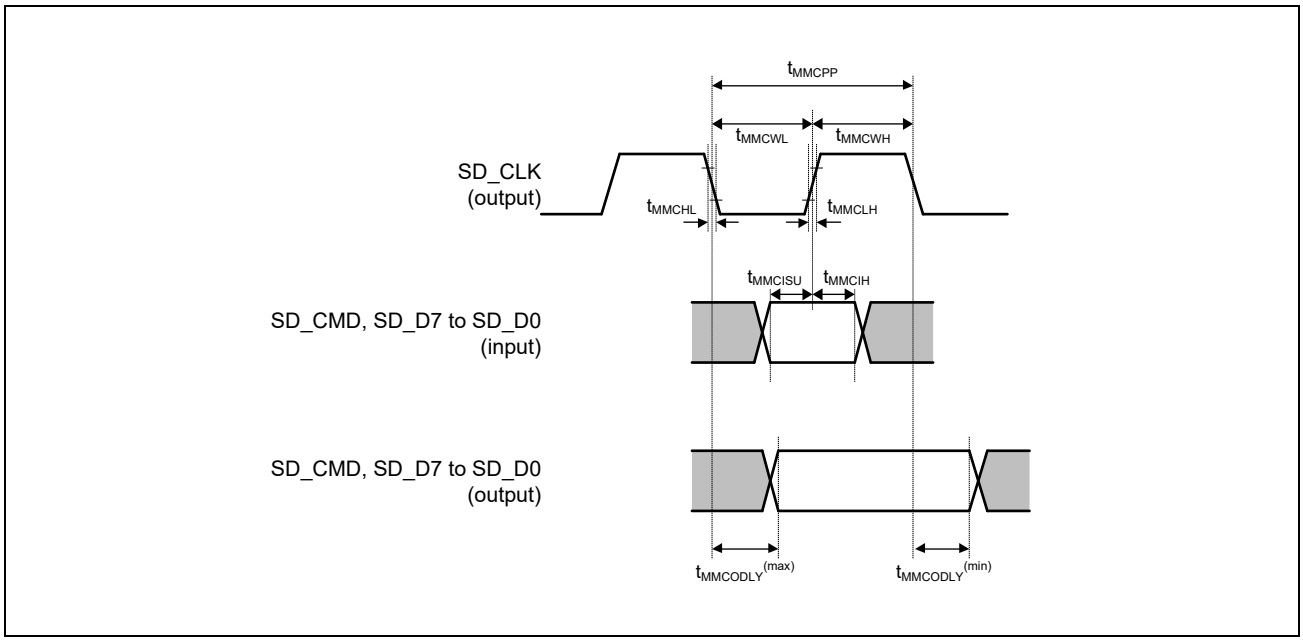

Figure 3.9 eMMC Host Interface Timing (MMC Default/HS-SDR 1.8-V/3.3-V Power Supply)

Downloaded from Arrow.com.

3.5.3.3 eMMC host interface timing (HS200)

Table 3.26 eMMC Host Interface Timing (HS200 1.8-V Power Supply Operation, Output Load 15 pF)

Item	Symbol	Min.	Max.	Unit	Figures
SD0_CLK clock cycle	t_{MMCPP}	7.50	15.0	ns	**Figure 3.10**
SD0_CLK clock high level width	t_{MMCWH}	3.20	—	ns	
SD0_CLK clock low level width	t_{MMCWL}	3.20	—	ns	
SD0_CLK clock rise time	t_{MMCLH}	—	1.22	ns	
SD0_CLK clock fall time	t_{MMCHL}	—	1.22	ns	
SD0_CMD/SDDAT output delay	$t_{MMCODLY}$	−1.50	1.75	ns	
SD0_CMD/SDDAT input set up time	t_{MMCISU}	—	—	ns	
SD0_CMD/SDDAT input hold time	t_{MMCIH}	—	—	ns	
SD0_CMD/SDDAT input data width	t_{MMCIDW}	4.31	—	ns	

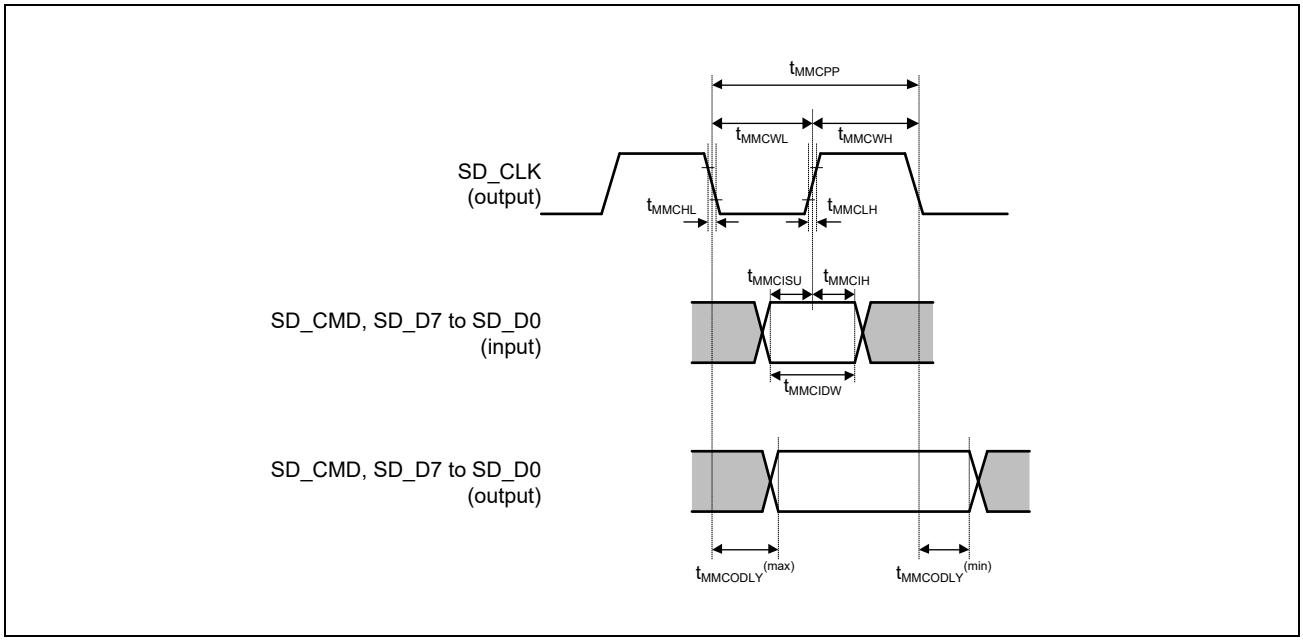

Figure 3.10 eMMC Host Interface (MMC Interface HS200 Mode 1.8-V Power Supply Selection)

Downloaded from Arrow.com.

3.5.4 USB 2.0 Host/Function Module Access Timing

3.5.4.1 USB 2.0 Low-Speed Access Timing

Table 3.27 USB Transceiver Timing (Low-Speed)

Item	Symbol	Min.	Max.	Unit	Figures
Rise time	t_{LR}	75	300	ns	**Figure 3.11**
Fall time	t_{LF}	75	300	ns	
Rise/fall time lag	t_{LR}/t_{LF}	80	125	%	

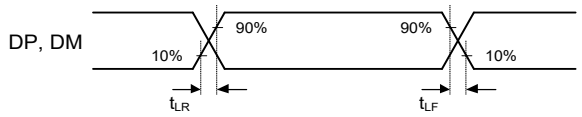

Figure 3.11 USB0_DP, USB1_DP, USB0_DM, and USB1_DM Output Timing (Low-Speed)

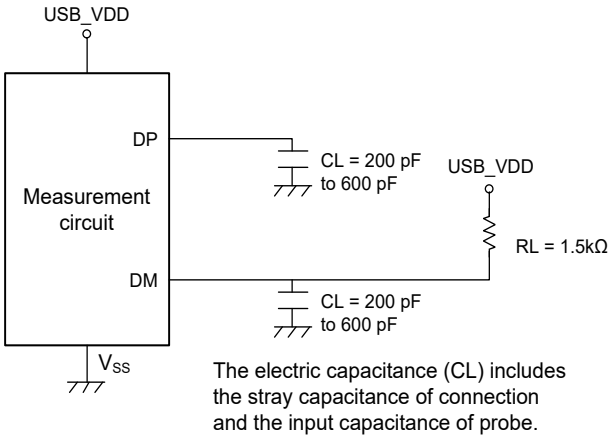

Figure 3.12 Measurement Circuit (Low-Speed)

Downloaded from Arrow.com.

3.5.4.2 USB 2.0Full-Speed Access Timing

Table 3.28 USB Transceiver Timing (Full-Speed)

Item	Symbol	Min.	Max.	Unit	Figures
Rise time	t_{FR}	4	20	ns	**Figure 3.13**
Fall time	t_{FF}	4	20	ns	
Rise/fall time lag	t_{FR}/t_{FF}	90	111.11	%	

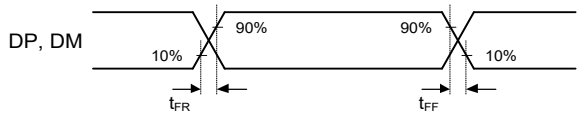

Figure 3.13 USB0_DP, USB1_DP, USB0_DM, and USB1_DM Output Timing (Full-Speed)

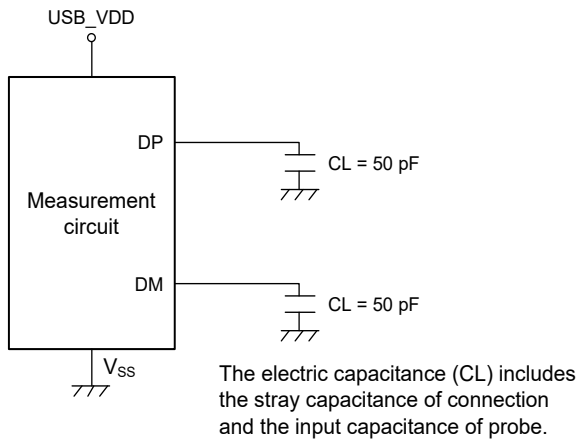

Figure 3.14 Measurement Circuit (Full-Speed)

Downloaded from Arrow.com.

3.5.4.3 USB 2.0 Hi-Speed Access Timing

Table 3.29 USB Transceiver Timing (Hi-Speed)

Item	Symbol	Min.	Max.	Unit	Figures
Rise edge rate	t_{HSR}	—	2133	V/μs	**Figure 3.15**
Fall edge rate	t_{HSF}	—	2133	V/μs	
Output driver resistance	Z_{HSDRV}	40.5	49.5	Ω	

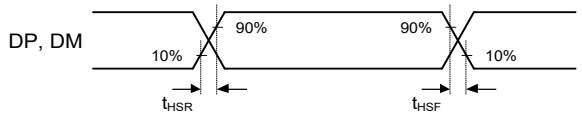

Figure 3.15 USB0_DP, USB1_DP, USB0_DM, and USB1_DM Output Timing (Hi-Speed)

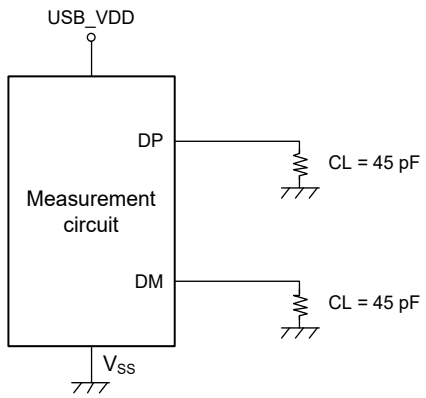

Figure 3.16 Measurement Circuit (Hi-Speed)

Downloaded from Arrow.com.

3.5.5 Ethernet Interface Access Timing

Table 3.30 Ethernet Interface Access Timing

Item	Symbol	Min.	Max.	Unit	Figures
MDC half cycle	t_{MDC}	0	300	ns	**Figure 3.17**
MDI setup time	$t_{MDIsetup}$	10	—	ns	
MDI hold time	$t_{MDIhold}$	10	—	ns	

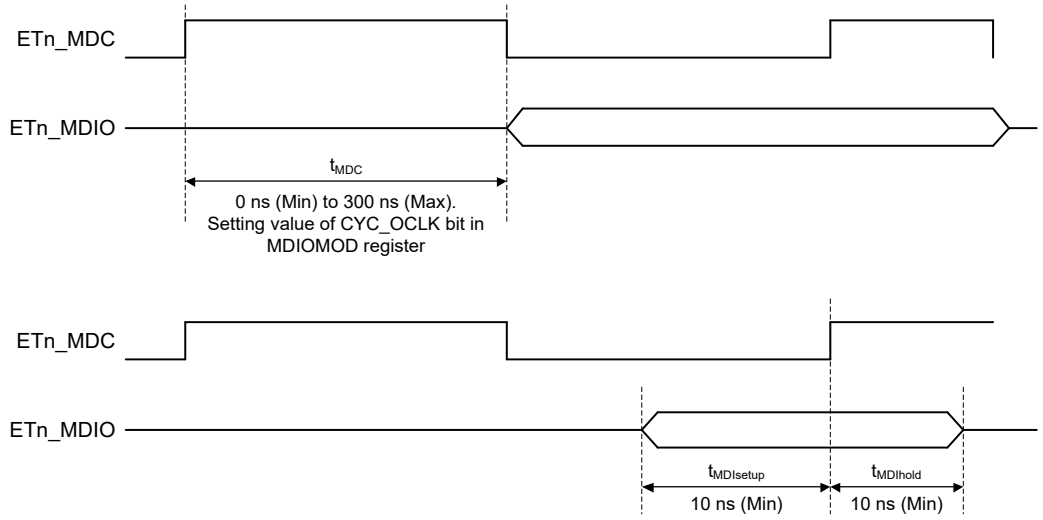

Note: (n = 0, 1)

Figure 3.17 Management Interface

Downloaded from Arrow.com.

3.5.5.1 Ethernet-IF (Ether MII)

Table 3.31 Ethernet-IF Access Timing (Ether MII)

Item		Symbol	Min.	Max.	Unit	Figures
Ether MII	ETH_GTXTXC_TXC period	t_{Tcyc}	40	—	ns	**Figure 3.18**
	ETH_TXCTL output delay	t_{TENd}	0	25	ns	
	ETH_TXD3-0 output delay	t_{MTDd}	0	25	ns	
	ETH_RXC period	t_{Rcyc}	40	—	ns	
	ETH_RXDV setup time	t_{RDVs}	10	—	ns	
	ETH_RXDV hold time	t_{RDVh}	10	—	ns	
	ETH_RXD3-0 setup time	t_{MRDs}	10	—	ns	
	ETH_RXD3-0 hold time	t_{MRDh}	10	—	ns	
	ETH_RXER setup time	t_{RERs}	10	—	ns	
	ETH_RXER hold time	t_{RERh}	10	—	ns	

Note: I/O driving ability: 8 mA
CL = 8 pF

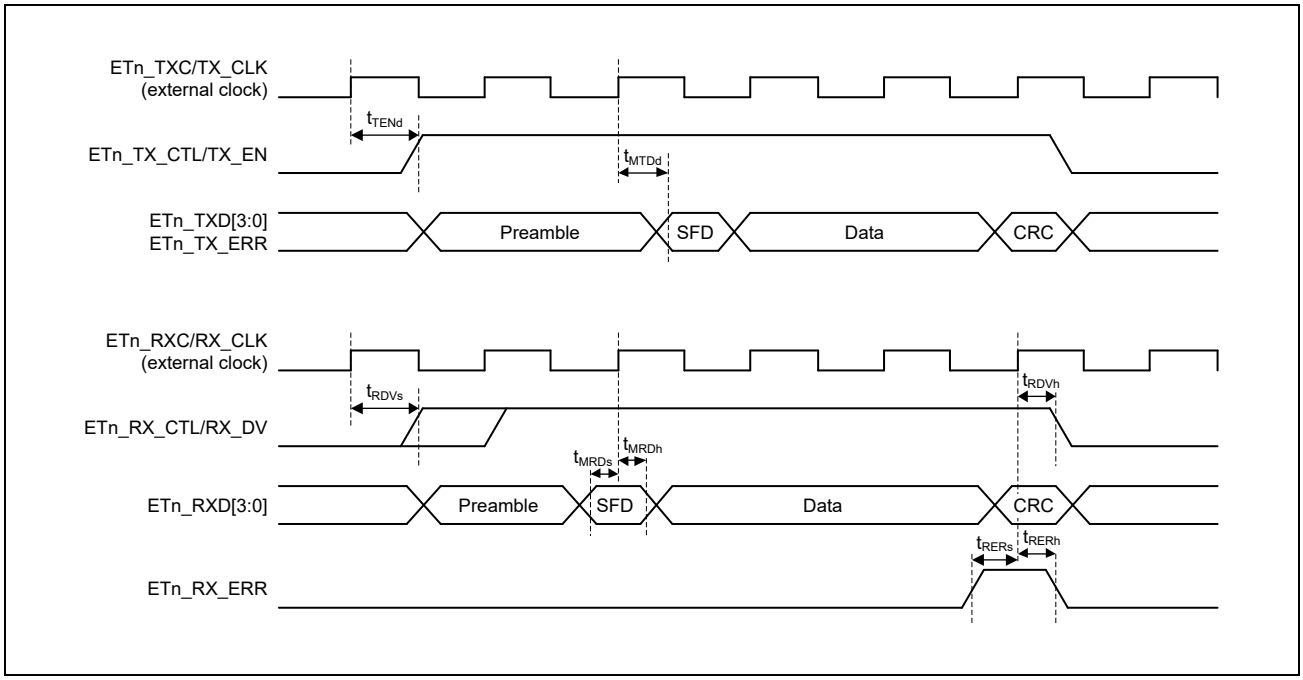

Figure 3.18 MII Transmission Timing

Validated with IEEE802.3 regulation.

The propagation delay for each twisted pair, measured from the MII connector to the PHY, shall not exceed 2.5 ns.

The variation in the propagation delay of the twisted pairs in a given cable bundle, measured from the MII connector to the PHY, shall not exceed 0.1 ns.

Downloaded from Arrow.com.

3.5.5.2 Ethernet-IF (Ether RGMII)

Table 3.32 Ethernet-IF Access Timing (Ether RGMII)

Item		Symbol	Min.	Typ.	Max.	Unit	capaci-tance	Remarks	Figures
Ether RGMII	Data to clock output skew @ transmitter	T_{skewT}	−500	0	500	ps	8 pF	Tx RGMII	**Figure 3.19**
	Data to clock input skew @ receiver	T_{skewR}	1	1.8	2.6	ns	8 pF		
	Data to clock output setup @ transmitter integrated delay	T_{setupT}	1.2	2.0	—	ns	8 pF	Rx RGMII-ID	**Figure 3.20**
	Clock to data output hold @ transmitter integrated delay	T_{holdT}	1.2	2.0	—	ns	8 pF		
	Data to clock input setup setup @ receiver integrated delay	T_{setupR}	1.0	2.0	—	ns	8 pF	Rx RGMII-ID	**Figure 3.20**
	Data to clock input setup hold @ receiver integrated delay	T_{holdR}	1.0	2.0	—	ns	8 pF		
	Clock cycle duration*1	T_{cyc}	7.2	8	8.8	ns	8 pF	—	—
	Duty cycle for gigabit	Duty_G	45	50	55	%	8 pF		
	Duty cycle for 10/100T	Duty_T	40	50	60	%	8 pF		
	Rise/fall time (20-80%)	T_r/T_f	—	—	0.75	ns	8 pF		

Note 1. For 10 Mbps and 100 Mbps, T_{cyc} will scale to 400ns ±40ns and 40ns ±4ns respectively.

Downloaded from Arrow.com.

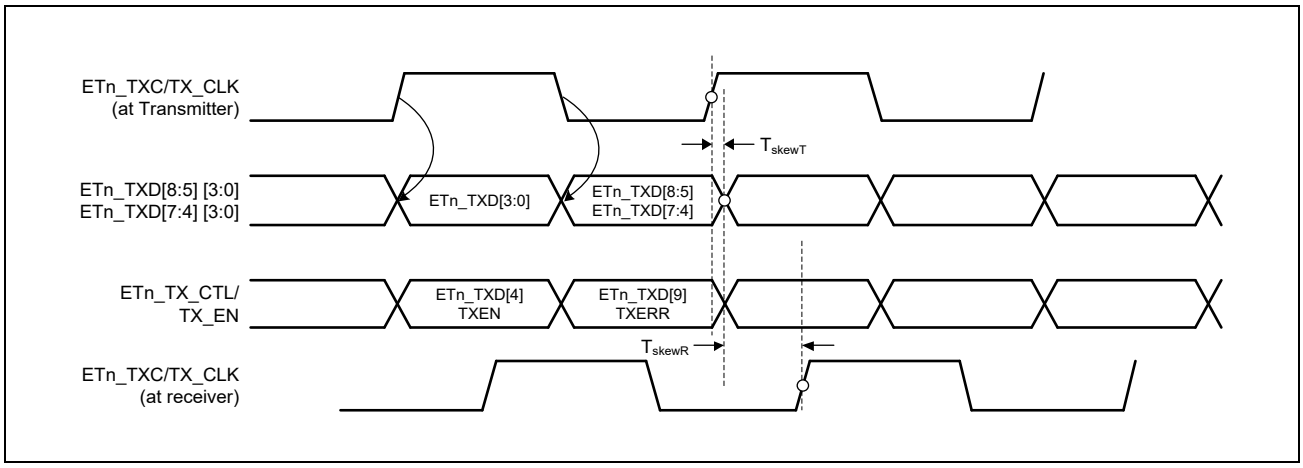

Figure 3.19 Multiplexing & Timing Diagram — RGMII (Transmitter)

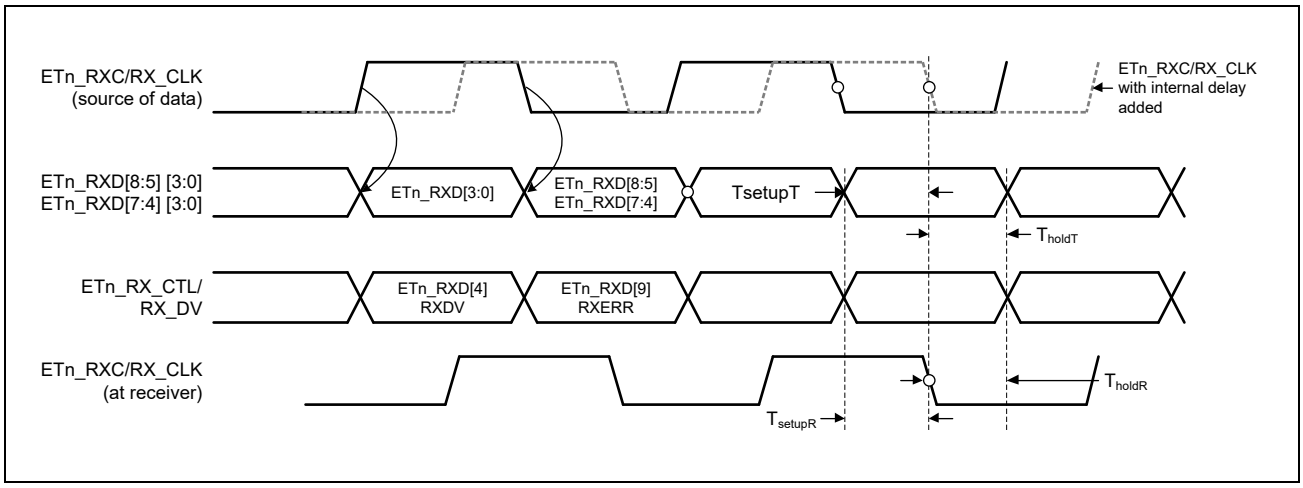

Figure 3.20 Multiplexing & Timing Diagram — RGMII-ID (Receiver)

Downloaded from Arrow.com.

3.5.6 JTAG Debugger Interface Access Timing

Table 3.33 Debugger IF Timing

Item	Symbol	Min.	Max.	Unit	Figures
TCK_SWCLK cycle time	t_{TCKcyc}	50	—	ns	**Figure 3.21**
TCK_SWCLK high pulse width	t_{TCKH}	20	—	ns	**Figure 3.22**
TCK_SWCLK low pulse width	t_{TCKL}	20	—	ns	
TDI setup time	t_{TDIS}	15	—	ns	
TDI hold time	t_{TDIH}	15	—	ns	
TMS_SWDIO setup time	t_{TMSS}	15	—	ns	
TMS_SWDIO hold time	t_{TMSH}	15	—	ns	
SWDIO delay time	t_{SWDO}	—	14	ns	
TDO delay time	t_{TDOD}	—	14	ns	
Capture register setup time	t_{CAPTS}	10	—	ns	**Figure 3.23**
Capture register hold time	t_{CAPTH}	10	—	ns	
Update register delay time	$t_{UPDATED}$	—	20	ns	

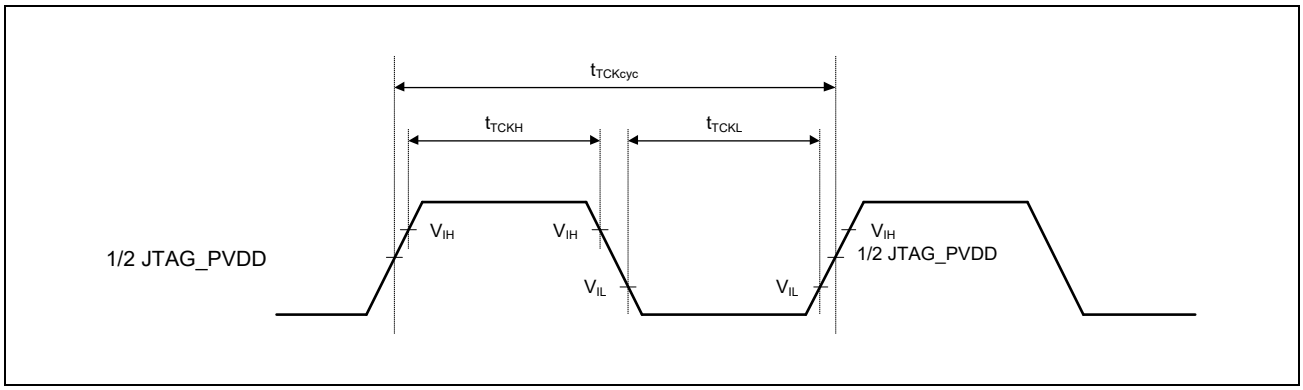

Figure 3.21 TCK_SWDCLK Input Timing

Downloaded from Arrow.com.

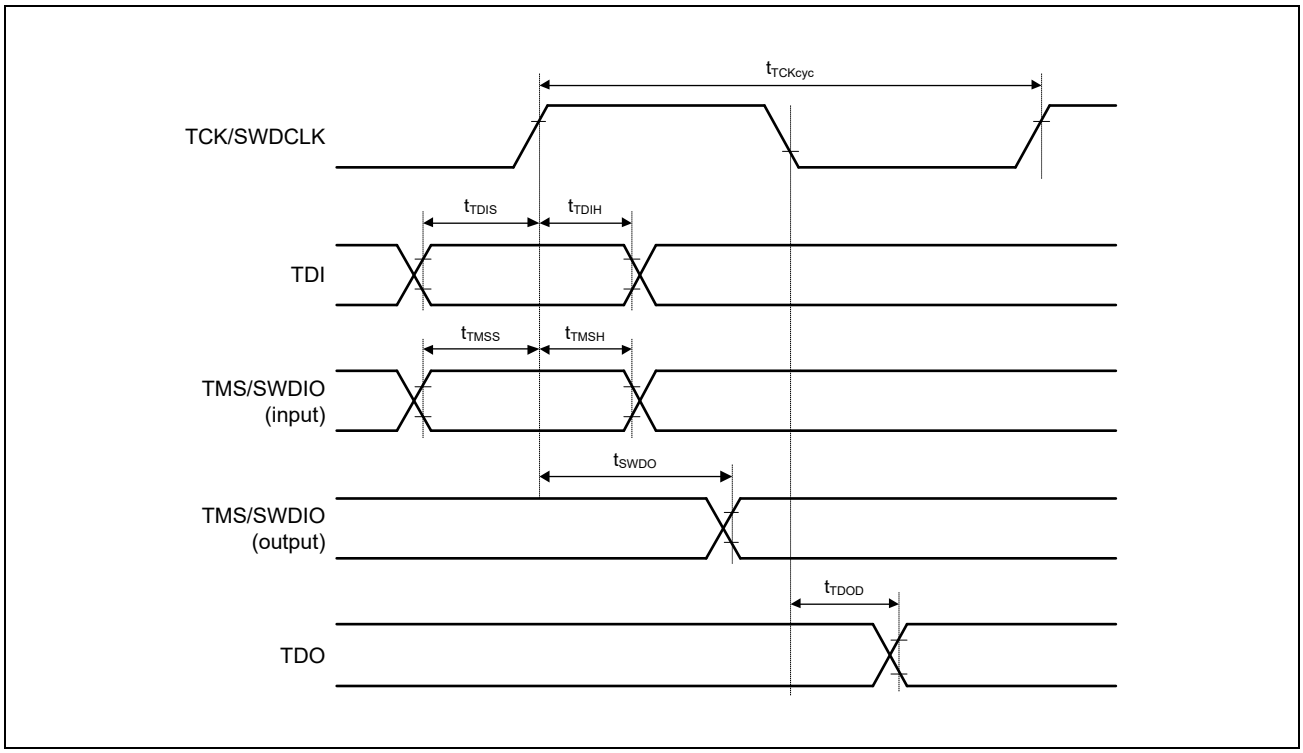

Figure 3.22 Data Transfer Timing

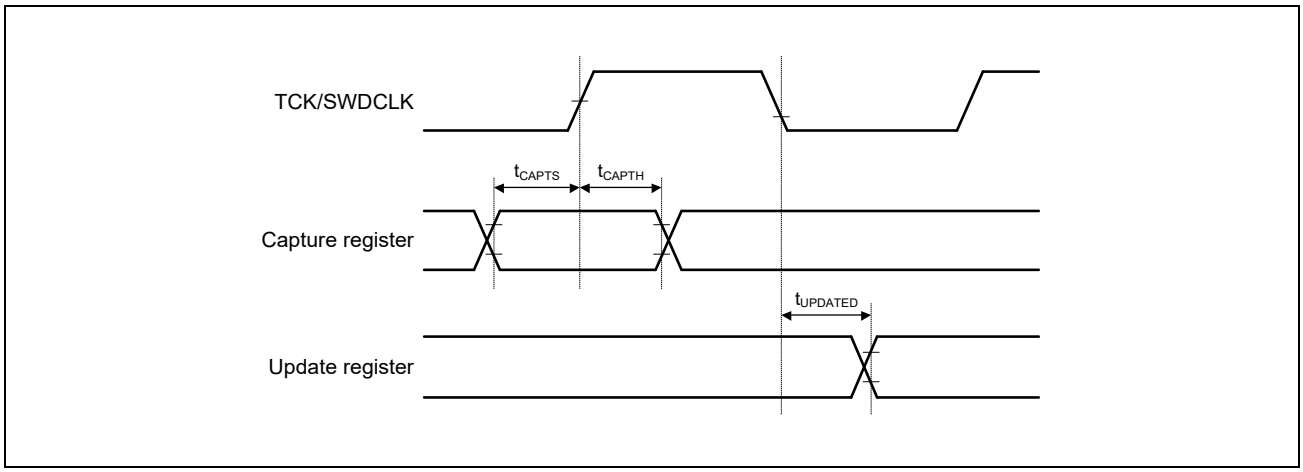

Figure 3.23 Boundary Scan Input/Output I/O Timing

Downloaded from Arrow.com.

3.5.7 SPI Multi I/O Bus Controller Access Timing

Table 3.34 SPI Multi I/O Bus Contoller Access Timing

Item		Symbol	1.8 V (Serial flash connected) Min.	1.8 V (Serial flash connected) Max.	3.3 V (Serial flash connected) Min.	3.3 V (Serial flash connected) Max.	Unit	Figures
Clock cycle		t_{SPBcyc}	15.0	—	15.0	—	ns	**Figure 3.24**
CLK high pulse width		t_{SPBWH}	0.45	0.55	0.45	0.55	t_{SPBcyc}	**Figure 3.24**
CLK low pulse width		t_{SPBWL}	0.45	0.55	0.45	0.55	t_{SPBcyc}	**Figure 3.24**
CLK rise time		t_{SPBR}	—	1.0	—	3.2	ns	**Figure 3.24**
CLK fall time		t_{SPBF}	—	1.0	—	3.2	ns	**Figure 3.24**
Data input setup time	QSPI0_SPCLK base point (SDR mode timing adjusted)	t_{SU}	6.7	—	7.5	—	ns	**Figure 3.25**
	QSPI0_SPCLK base point (DDR mode timing adjusted)		4.5	—	4.5	—	ns	**Figure 3.26**
Data input hold time	QSPI0_SPCLK base point (SDR mode timing adjusted)	t_H	0.5	—	0.5	—	ns	**Figure 3.25**
	QSPI0_SPCLK base point (DDR mode timing adjusted)		1.0	—	1.0	—	ns	**Figure 3.26**
SSL setup time		t_{LEAD}	1.5 × t_{SPBcyc} − 3	8.5 × t_{SPBcyc} + 3	1.5 × t_{SPBcyc} − 3	8.5 × t_{SPBcyc} + 3	ns	**Figure 3.25**, **Figure 3.26**
SSL hold time		t_{LAG}	1 × t_{SPBcyc} − 3	8 × t_{SPBcyc} + 3	1 × t_{SPBcyc} − 3	8 × t_{SPBcyc} + 3	ns	**Figure 3.25**, **Figure 3.26**
Continuous transfer delay time		t_{TD}	1 × t_{SPBcyc} − 3	8 × t_{SPBcyc} + 3	1 × t_{SPBcyc} − 3	8 × t_{SPBcyc} + 3	ns	**Figure 3.25**, **Figure 3.26**
Data output delay time	SDR	t_{OD}	—	2.0	—	5.0	ns	**Figure 3.25**
	DDR		—	6.5*2	—	7.5*3	ns	**Figure 3.26**
Data output hold time	SDR	t_{OH}	−2.0	—	-5.0	—	ns	**Figure 3.25**
	DDR		1.0*2	—	2.1*3	—	ns	**Figure 3.26**
Data output buffer off time	SDR	t_{BOFF}	—	2.0	—	3.0	ns	**Figure 3.27**
	DDR		—	2.0	—	3.0	ns	**Figure 3.27**

Note 1. Output load: 15 pF/driving ability: 12 mA

Note 2. QSPI0_SPCLK frequency: 100 MHz.

Note 3. QSPI0_SPCLK frequency: 66 MHz

Downloaded from Arrow.com.

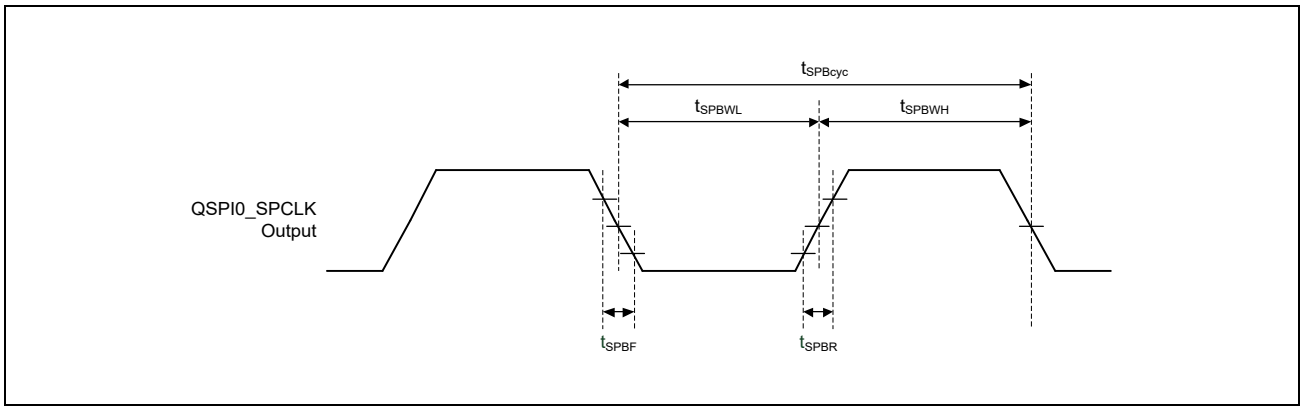

Figure 3.24 Clock Timing

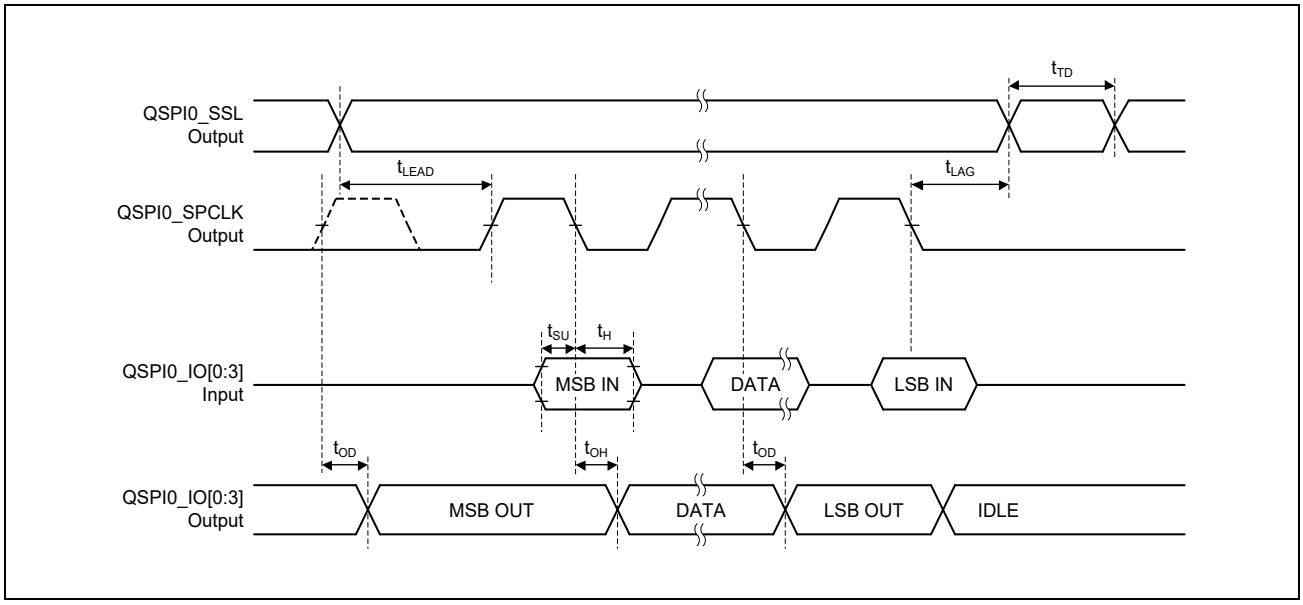

Figure 3.25 SDR Transfer Format Transmission and Reception Timing

Downloaded from Arrow.com.

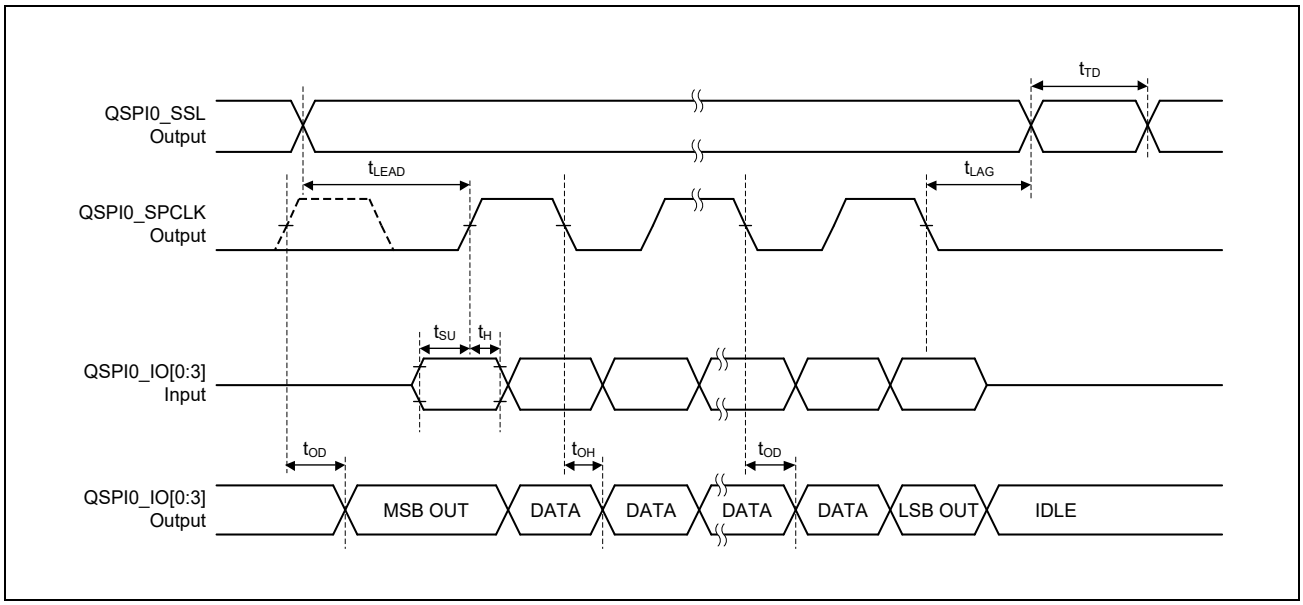

Figure 3.26 DDR Transfer Format Transmission and Reception Timing

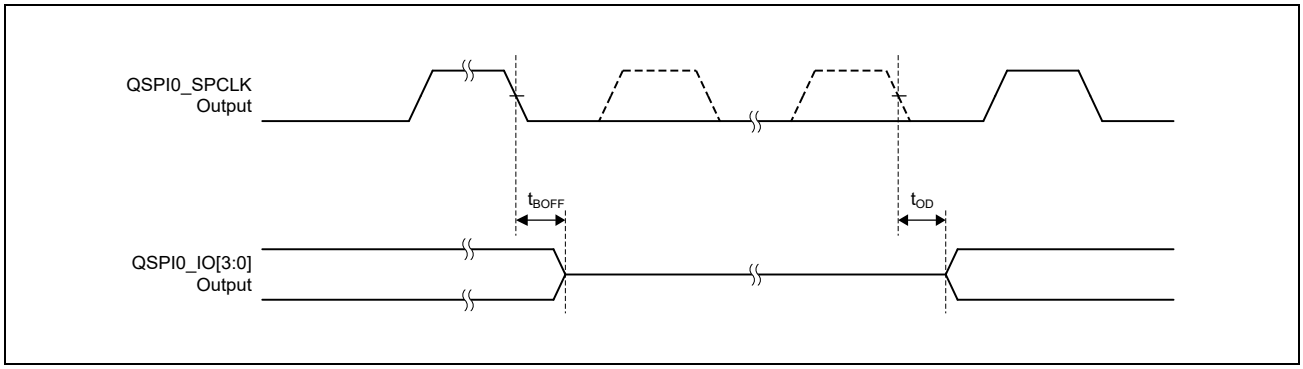

Figure 3.27 Timing for Switching the Buffers On and Off

Downloaded from Arrow.com.

3.5.8 Control Signal Access Timing

Table 3.35 Control Signal Timing

Item	Symbol	Min.	Max.	Unit	Figures
PRST# pulse width	t_{RESW}	20	—	t_{cyc}*1	**Figure 3.28**
TRST# pulse width	t_{TRSW}	20	—	t_{cyc}*1	
NMI pulse width	t_{NMIW}	20	—	t_{cyc}*1	**Figure 3.30**
IRQ pulse width	t_{IRQW}	20	—	t_{cyc}*1	
TINT pulse width	t_{TINTW}	20	—	t_{cyc}*1	
PRST# input rise time	t_{RSr}	—	500	μs	**Figure 3.29**

Note 1. t_{cyc} = 41.666 ns (24 MHz)

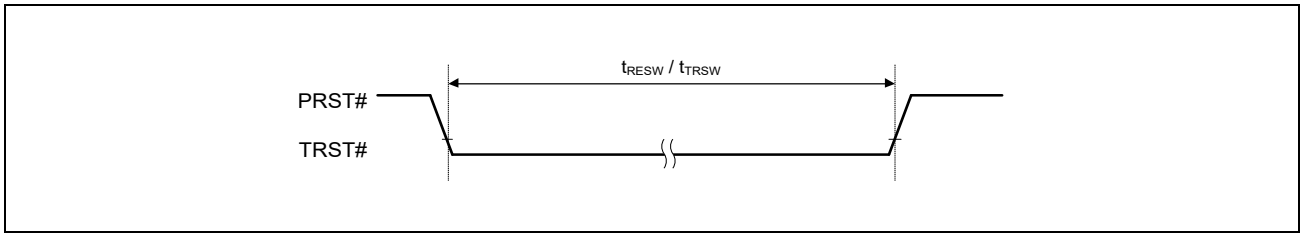

Figure 3.28 Reset Input Timing 1

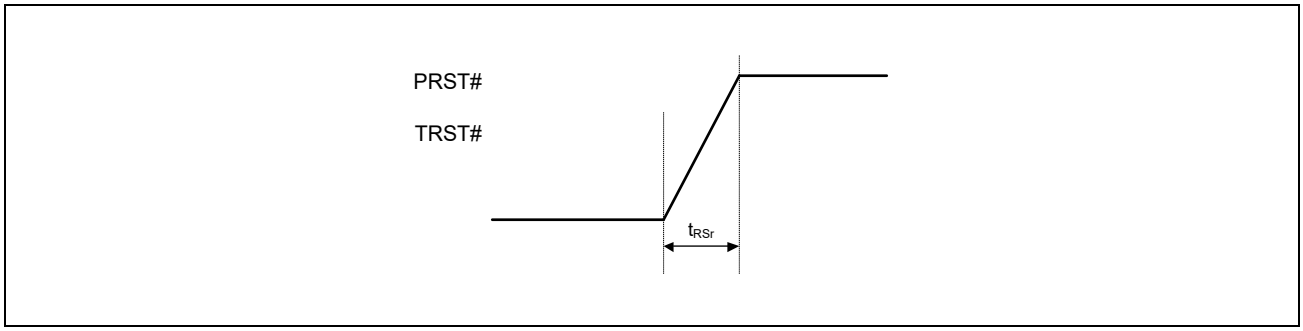

Figure 3.29 Reset Input Timing 2

Downloaded from Arrow.com.

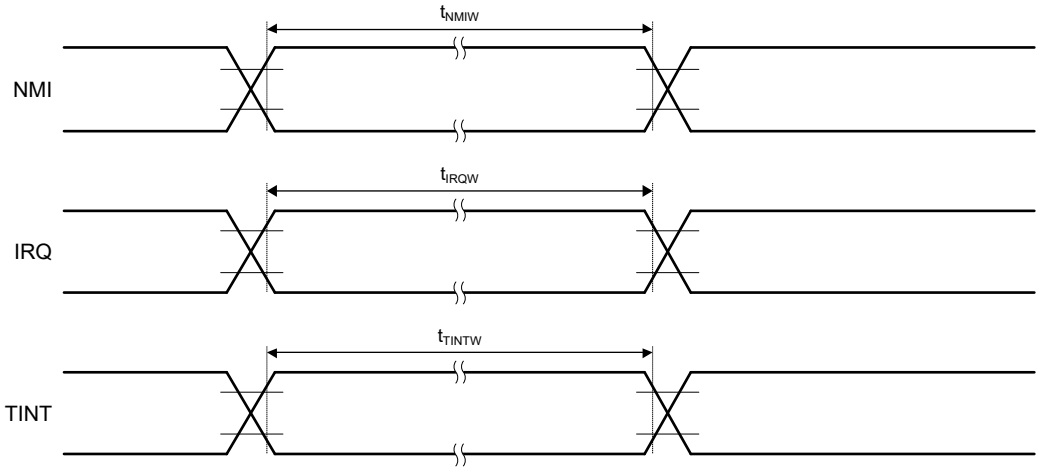

Note: This specification "(Min. 20 t_{cycle})" is the min. pulse width the case that the digital noise filter is off. For details on digital noise filter settings, refer to *Section 41, General Purpose Input Output Port (GPIO)*, in the *User's Manual: Hardware*.

Figure 3.30 Interrupt Signal Input Timing

Downloaded from Arrow.com.

3.5.9 Serial Sound Interface (SSIF-2) Access Timing

Table 3.36 SSIF-2 Timing

Item	I/O	Symbol	Min.	Max.	Unit	Figures
Output clock cycle	Output	t_O	80	64000	ns	**Figure 3.31**
Input clock cycle	Input	t_I	80	—	ns	
Clock high	Bidirectional	t_{HC}	32	—	ns	
Clock low		t_{LC}	32	—	ns	
Clock rise time/clock fall time	Output	t_{RC}/t_{FC}	—	25	ns	
Setup time	Input	t_{SR}	25	—	ns	**Figure 3.32**, **Figure 3.33**, **Figure 3.34**
Hold time		t_{HR}	5	—	ns	
SILRCK output delay time	Output	t_{DTR}	−5	25	ns	
Data output delay time (Noise canceler not in use)		t_{DTR}	−5	25	ns	
Data output delay time (Noise canceler in use)		t_{DTR}	10	50	ns	

Note: AC access timing condition: drive ability 12mA, output load 30pF, slew rate = fast

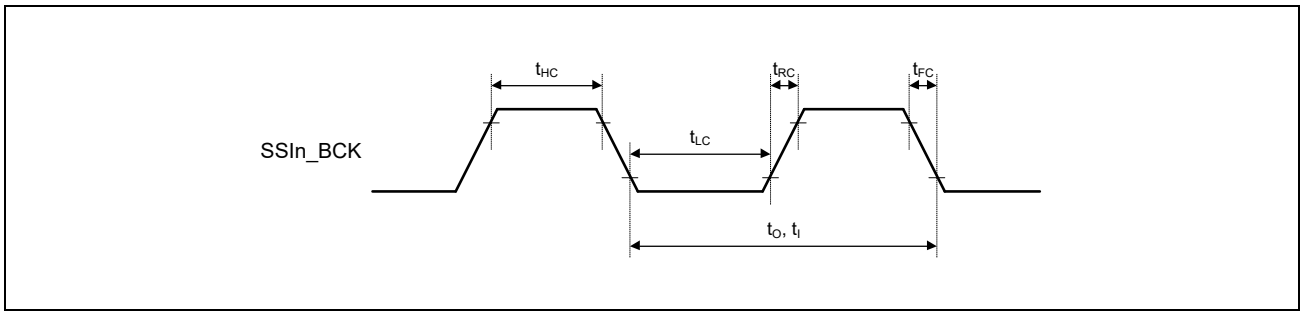

Figure 3.31 Bit Clock Input/Output Timing

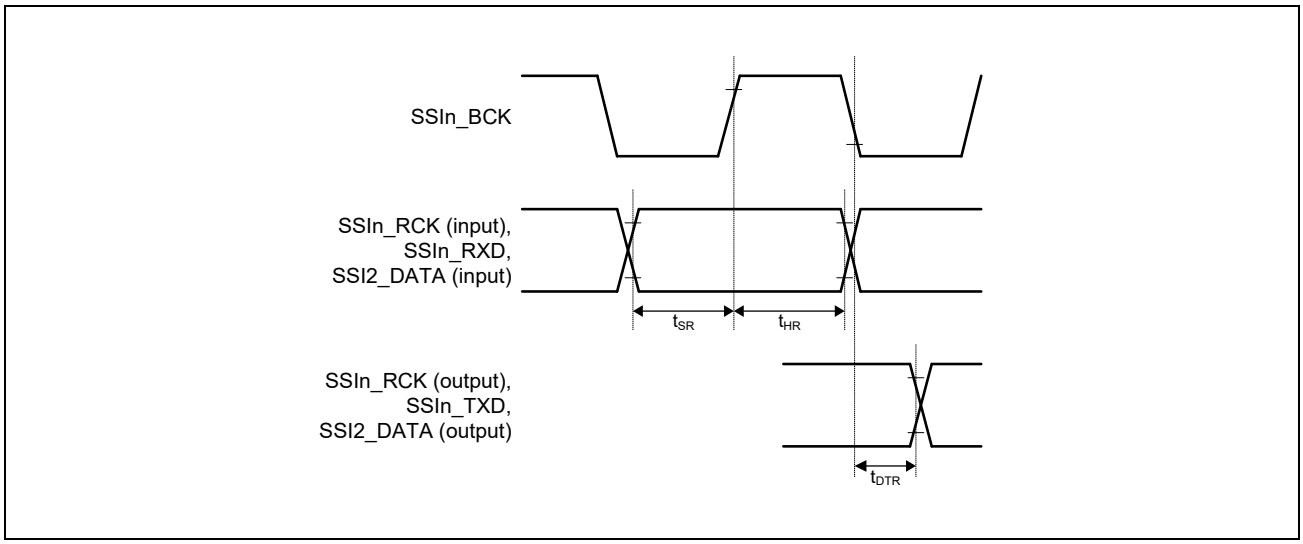

Figure 3.32 Transmission and Reception Timing (SSIBCK Falling Output)

Downloaded from Arrow.com.

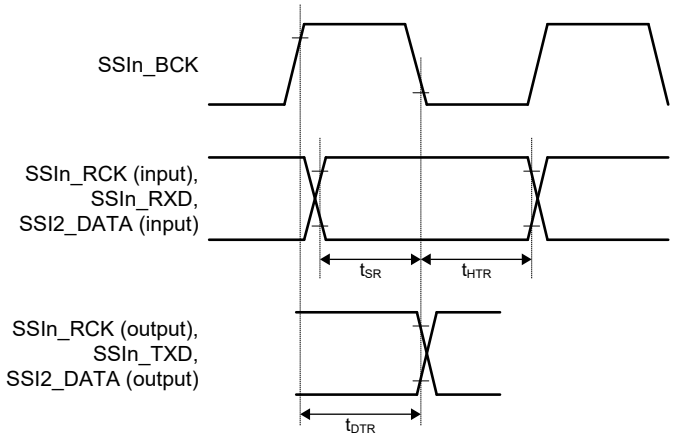

Figure 3.33 Transmission and Reception Timing (SSIBCK Rising Output)

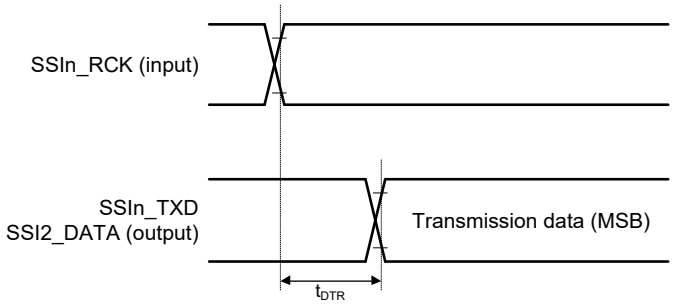

Note: Output timing of the MSB when slave transmission satisfies the following condition a) or b)

a) SSICR.DEL = 1, SSICR.SDTA = 0

b) SSICR.DEL = 1, SSICR.SDTA = 1, without padding

Figure 3.34 Transmission Timing (Slave, in Synchronization with SSILRCK)

Downloaded from Arrow.com.

3.5.10 CAN-FD Interface Access Timing

Table 3.37 CAN-FD Interface Timing

Item	Symbol	CAN		CAN-FD		Unit	Figures
		Min.	Max.	Min.	Max.		
Internal delay time	t_{node}*1	—	100	—	75	ns	**Figure 3.35**
Transmission rate	—	—	1	—	4	Mbps	

Note: AC access timing condition: drive ability 12mA, output load 15pF, slew rate = fast

Note 1. Internal delay time (t_{node}) = Internal transfer delay time (t_{output}) + Internal receive delay time (t_{input})

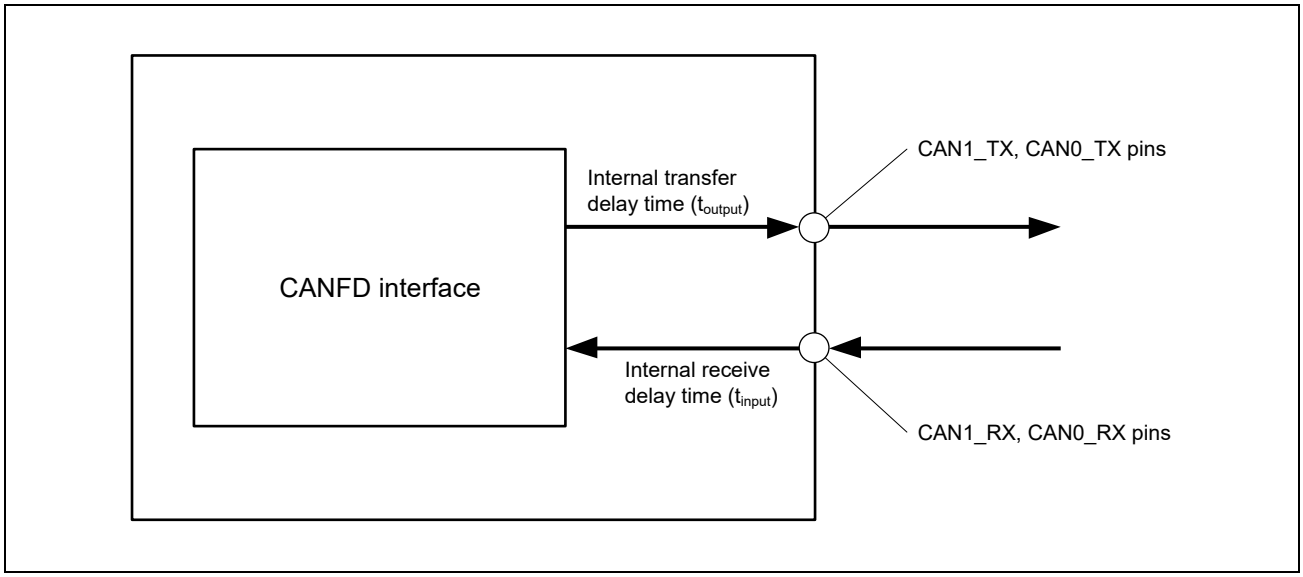

Figure 3.35 CAN-FD Interface Condition

Downloaded from Arrow.com.

3.5.11 Multi-Function Timer Pulse Unit 3 (MTU3a) Access Timing

Table 3.38 MTU3a Timing

Item			Symbol	Min.	Max.	Unit*1	Figures
MTU3a	Input capture input pulse width	Single-edge setting	t_{MTICW}	1.5	—	t_{p1cyc}*1	**Figure 3.36**
		Both-edge setting		2.5	—		
	Timer clock pulse width	Single-edge setting	t_{MTCKWH}, t_{MTCKWL}	1.5	—	t_{p1cyc}*1	**Figure 3.37**
		Both-edge setting		2.5	—		
		Phase counting mode		2.5	—		

Note: AC access timing condition: drive ability 4mA, output load 30pF, slew rate = fast

Note 1. t_{p1cyc} indicates peripheral clock means MTU_X_MCLK_MTU3 (P0ϕ).

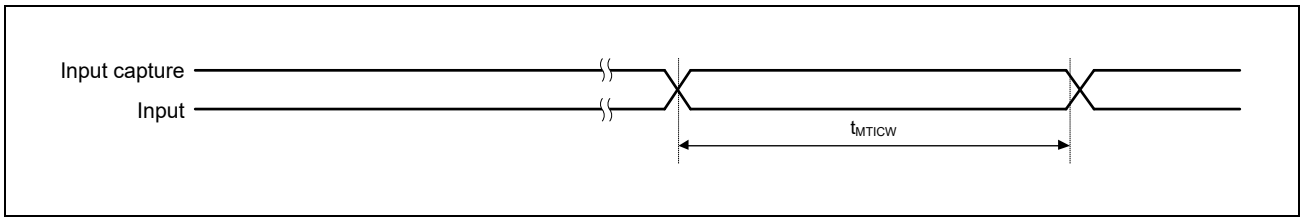

Figure 3.36 MTU3a Input Capture Input Timing

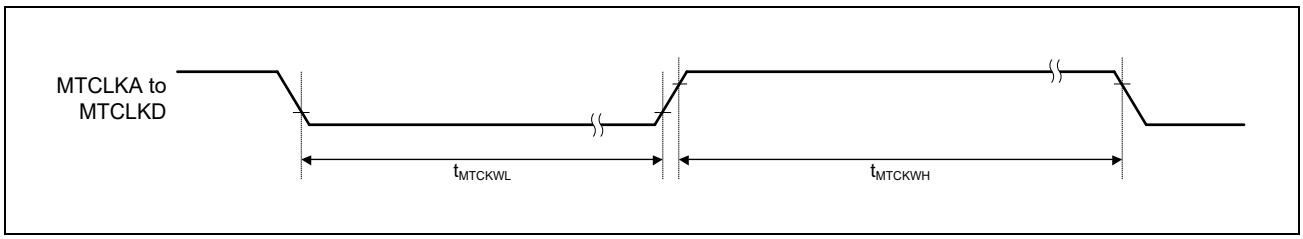

Figure 3.37 MTU3a Clock Input Timing

Downloaded from Arrow.com.

3.5.12 Port Output Enable 3 (POE3) Access Timing

Table 3.39 POE3 Timing

Item		Symbol	Min.	Max.	Unit	Figures
POE3	POEn# input pulse width	t_{POE3W}	1.5	—	t_{p1cy}*1	**Figure 3.38**

Note 1. t_{p1cyc} indicates peripheral clock means POE3_CLKM_POE (P0ϕ).

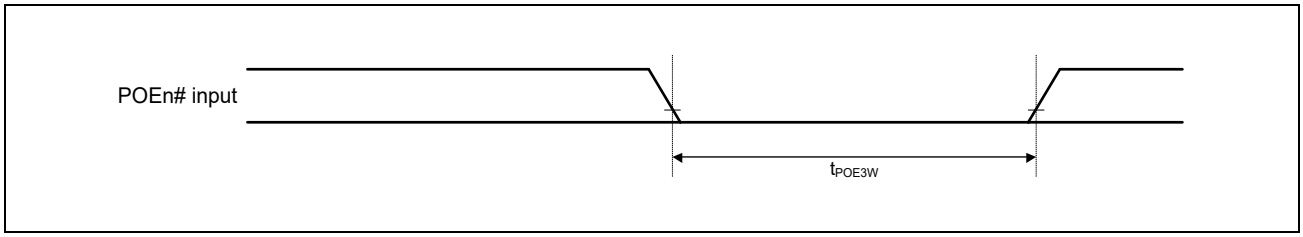

Figure 3.38 POEn# Input Pulse Timing

Downloaded from Arrow.com.

3.5.13 I²C Bus Interface Access Timing

Table 3.40 I²C Bus Interface Timing

Item	Symbol	I/O	Standard Mode (Sm)		Fast Mode (Fm)		Fast Mode Plus (Fm+)		Unit
			Min.	Max.	Min.	Max.	Min.	Max.	
SCL clock frequency	f_{CLK}	I/O	0	100	0	400	0	1000	kHz
Bus free time (between stop and start condition)	t_{BUF}	I/O	4.7	—	1.3	—	0.5	—	μs
Hold time*1	$t_{HD:STA}$	I/O	4.0	—	0.6	—	0.26	—	μs
Low period of SCL clock	t_{LOW}	I/O	4.7	—	1.3	—	0.5	—	μs
High period of SCL clock	t_{HIGH}	I/O	4.0	—	0.6	—	0.26	—	μs
Setup time for start / restart condition	$t_{SU:STA}$	I/O	4.7	—	0.6	—	0.26	—	μs
Data hold time (I²C bus device)	$t_{HD:DAT}$	I/O	0*2	—	0*2	—	0	—	μs
Data setup time	$t_{SU:DAT}$	I/O	250	—	100*3	—	50	—	ns
SDA and SCL signal rise time	t_R	Input	—	1000	20	300	—	120	ns
SDA and SCL signal fall time*3	t_F	Input	—	300	20 × (PV_{DD}/ 5.5 V)	300	20 × (PV_{DD}/ 5.5 V)	120	ns
		Output	—	300	20 × (PV_{DD}/ 5.5 V)*6	300*6	20 × (PV_{DD}/ 5.5 V)*7	120*7	ns
Setup time for STOP condition	$t_{SU:STO}$	I/O	4.0	—	0.6	—	0.26	—	μs
Capacitive load for each bus line	C_b	—	—	400*4	—	400*4	—	550*4	pF
Pulse width of spikes that must be suppressed by the input filter	t_{SP}	Input	—	—	0	50*5	0	50*5	ns

Note: In the above table and subsequently, SCL and SDA refer to the RIICnSCL and RIICnSDA signals, respectively.

Note: AC access timing condition: drive ability 4mA, output load 400pF, slew rate = slow

Note 1. The first clock pulse is generated on the SCL line after the start condition has been issued and the hold time has elapsed.

Note 2. This module requires a minimum of 300 ns hold time internally for the SDA signal to handle the period over which the falling edge of SCL has not reached a defined level (time until the CnSCL signal reaches V_{IL} (max.) from V_{IH} (min.)).

Note 3. The fast-mode I²C bus device can be used in the standard mode I²C bus system. In this case, the minimum value of the data setup time ($t_{SU:DAT}$ (min.) 250 [ns]) must be satisfied.
If the system does not extend the low period of SCL clock (t_{LOW}), this condition is automatically satisfied. If the system extends the low period of SCL clock (t_{LOW}), transmit the subsequent data bit to the SDA line before the SCL line is released (t_R (max.) + $t_{SU:DAT}$ (min.) = 1000 + 250 = 1250 [ns]: (standard mode I²C bus specification)).

Note 4. Total capacitance of one bus line. The allowable maximum bus capacitance may differ from this specification, depending on the actual operating voltage and frequency of an application. For techniques to cope with a large bus capacitance, see the I²C bus specification provided by NXP Semiconductors.

Note 5. Noise is removed by the analog and digital input filters. The level of noise reduction of the digital input filter is determined by the period of internal reference clock (IICϕ) and the NF[1:0] bits in RIICnMR3. For details, refer to *Section 26, I²C Bus Interface*, in the *User's Manual: Hardware*.

Note 6. External pull-up resistor is required 1077Ω to 1770Ω when using RIIC ch2 or RIIC ch3.

Note 7. External pull-up resistor is required 240Ω to 257Ω when using RIIC ch2 or RIIC ch3.

Downloaded from Arrow.com.

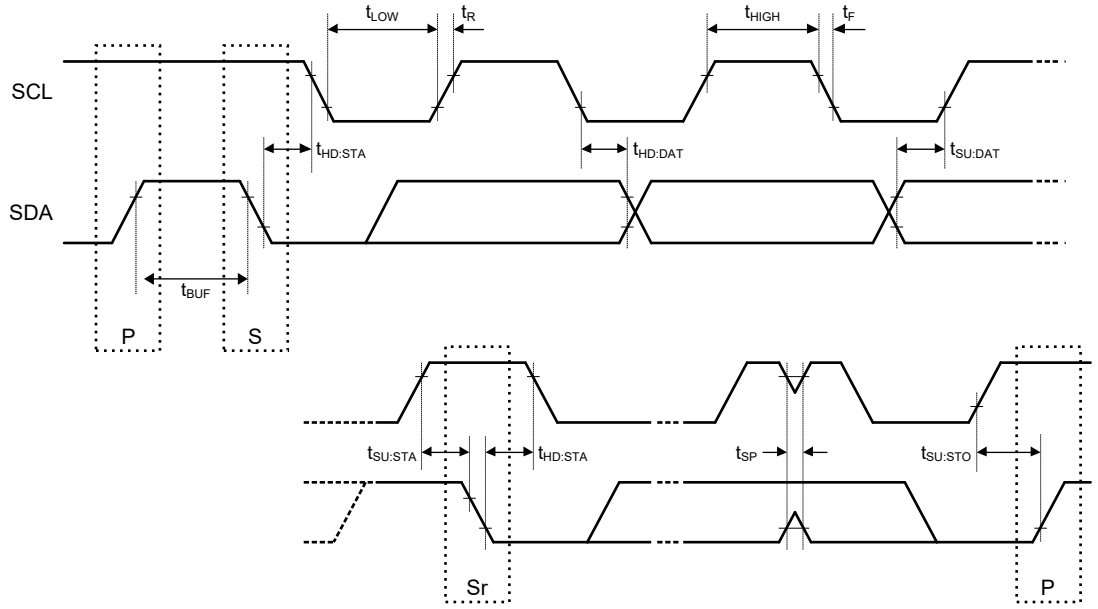

Note: P: Stop condition
S: Start condition
Sr: Start condition for retransmission

Figure 3.39 Input/Output Timing

Downloaded from Arrow.com.

3.5.14 Serial Communications Interface with FIFO (SCIFA) Access Timing

Table 3.41 SCIFA Timing

Item			Symbol	Min.	Max.	Unit	Figures
SCIFA	Input clock cycle	Asynchronous	t_{Scyc}	4	—	t_{p1cyc}*1	**Figure 3.40**
		Clocked synchronous		12	—		
	Input clock pulse width		t_{SCKW}	0.4	0.6	t_{p1cyc}*1	
	Input clock rise time		t_{SCKr}	—	5	ns	
	Input clock fall time		t_{SCKf}	—	5	ns	
	Output clock cycle	Asynchronous*2	t_{Scyc}	8	—	t_{p1cyc}*1	
		Clocked synchronous		4	—		
	Output clock pulse width		t_{SCKW}	0.4	0.6	t_{p1cyc}*1	
	Output clock rise time		t_{SCKr}	—	9	ns	
	Output clock fall time		t_{SCKf}	—	9	ns	
	Transmit data delay time	Internal clock	t_{TXD}	−10	10	ns	**Figure 3.41**
		External clock		3 × t_{p1cyc}*1	4 × t_{p1cyc}*1 + 20		
	Receive data setup time	Internal clock	t_{RXS}	3 × t_{p1cyc}*1 + 20	—	ns	
		External clock		t_{p1cyc}*1 + 10	—		
	Receive data hold time	Internal clock	t_{RXH}	−3 × t_{p1cyc}*1	—	ns	
		External clock		2 × t_{p1cyc}*1 + 10	—		

Note: AC access timing condition: drive ability 12mA, output load 30pF, slew rate = fast

Note 1. t_{p1cyc} indicates peripheral clock means SCIFn_CLK_PCK (P0ϕ) (n = 0 to 4).

Note 2. When the SEMR.ABCS0 and SEMR.BGDM bits are set to 1.

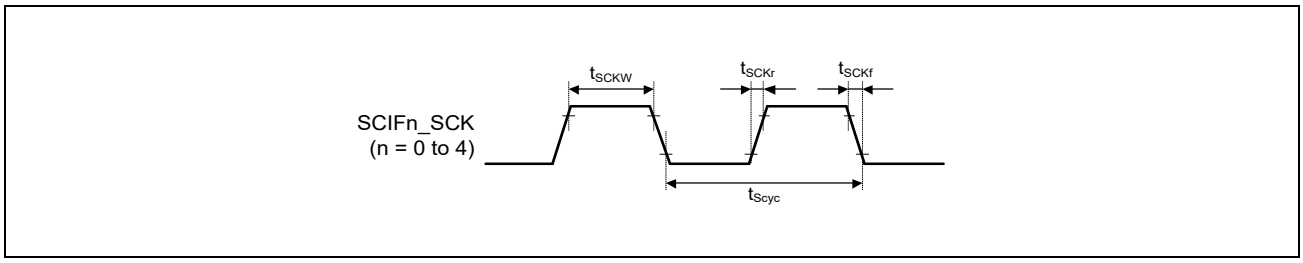

Figure 3.40 SCK Input Clock Timing

Downloaded from Arrow.com.

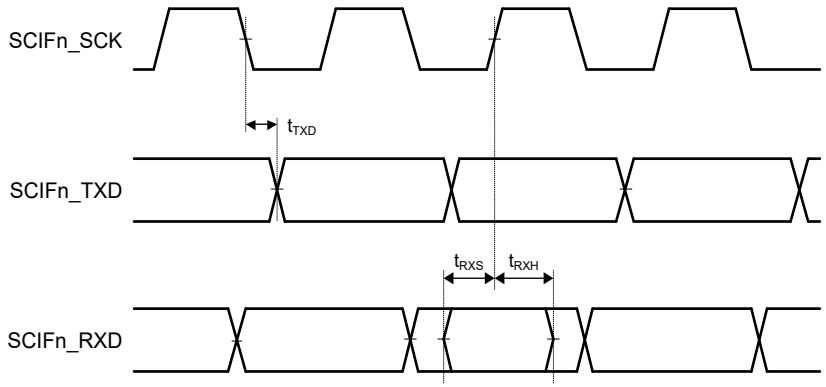

Note: n = 0 to 4

Figure 3.41 SCIFA Input/Output Timing in Clocked Synchronous Mode

Downloaded from Arrow.com.

3.5.15 Serial Communications Interface (SCIg) Access Timing

Table 3.42 SCIg Timing

Item			Symbol	Min.	Max.	Unit	Figures
SCIg	Input clock cycle	Asynchronous	t_{Scyc}	4	—	t_{p1cyc}*1	**Figure 3.42**
		Clocked synchronous		6	—		
	Input clock pulse width		t_{SCKW}	0.4	0.6	t_{p1cyc}*1	
	Input clock rise time		t_{SCKr}	—	5	ns	
	Input clock fall time		t_{SCKf}	—	5	ns	
	Output clock cycle	Asynchronous*2	t_{Scyc}	8	—	t_{p1cyc}*1	
		Clocked synchronous		4	—		
	Output clock pulse width		t_{SCKW}	0.4	0.6	t_{p1cyc}*1	
	Output clock rise time		t_{SCKr}	—	5	ns	
	Output clock fall time		t_{SCKf}	—	5	ns	
	Transmit data delay time	Clocked synchronous	t_{TXD}	—	28	ns	**Figure 3.43**
	Receive data setup time	Clocked synchronous	t_{RXS}	15	—	ns	
	Receive data hold time	Clocked synchronous	t_{RXH}	5	—	ns	

Note: AC access timing condition: drive ability 12mA, output load 30pF, slew rate = fast

Note 1. t_{p1cyc} indicates peripheral clock means SCIn_CLKP (P0ϕ) (n = 0 to 1).

Note 2. When the SEMR.ABCS0 and SEMR.BGDM bits are set to 1.

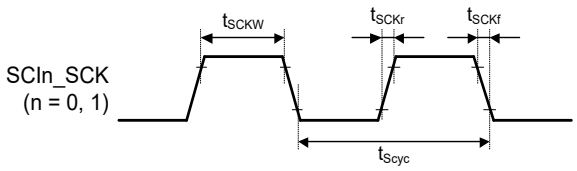

Figure 3.42 SCK Input Clock Timing

Downloaded from Arrow.com.

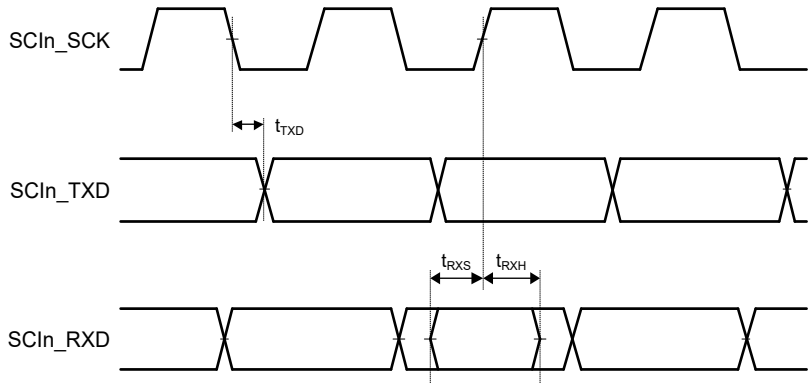

Note: n = 0, 1

Figure 3.43 SCIFA Input/Output Timing in Clocked Synchronous Mode

Downloaded from Arrow.com.

3.5.16 Renesas Serial Peripheral Interface (RSPI) Access Timing

Table 3.43 Renesas Serial Peripheral Interface Timing

Item		Symbol	Min.	Max.	Unit	Figure
RSPCK clock cycle	Master	t_{SPcyc}	2	4096	t_{p1cyc}*1	**Figure 3.44**
	Slave		8	4096		
RSPCK clock high pulse width	Master	t_{SPCKWH}	0.4	—	t_{SPcyc}*1	
	Slave		0.4	—		
RSPCK clock low pulse width	Master	t_{SPCKWL}	0.4	—	t_{SPcyc}*1	
	Slave		0.4	—		
Data input setup time	Master	t_{SU}	10	—	ns	**Figure 3.45** to **Figure 3.48**
	Slave		0	—	t_{p1cyc}*1	
Data input hold time	Master	t_H	0	—	ns	
	Slave		4	—	t_{p1cyc}*1	
SSL setup time	Master	t_{LEAD}	1 × t_{SPcyc} − 20	8 × t_{SPcyc}	ns	
	Slave		4	—	t_{p1cyc}*1	
SSL hold time	Master	t_{LAG}	1 × t_{SPcyc}	8 × t_{SPcyc} + 20	ns	
	Slave		4	—	t_{p1cyc}*1	
Data output delay time	Master	t_{OD}	—	19	ns	
	Slave		—	4	t_{p1cyc}*1	
Data output hold time	Master	t_{OH}	5	—	ns	
	Slave		2	—	t_{p1cyc}*1	
Continuous transmission delay time	Master	t_{TD}	1 × t_{SPcyc} + 2 × t_{cyc}	8 × t_{SPcyc} + 2 × t_{cyc}	ns	
	Slave		4 × t_{cyc}	—		
Slave access time		t_{SA}	—	4	t_{p1cyc}*1	**Figure 3.47**, **Figure 3.48**
Slave out release time		t_{REL}	—	3	t_{p1cyc}*1	

Note: AC access timing condition: drive ability 12mA, output load 30pF, slew rate = fast

Note 1. t_{p1cyc} indicates peripheral clock means RSPIn_CLKB (P0ϕ) (0 to 2).

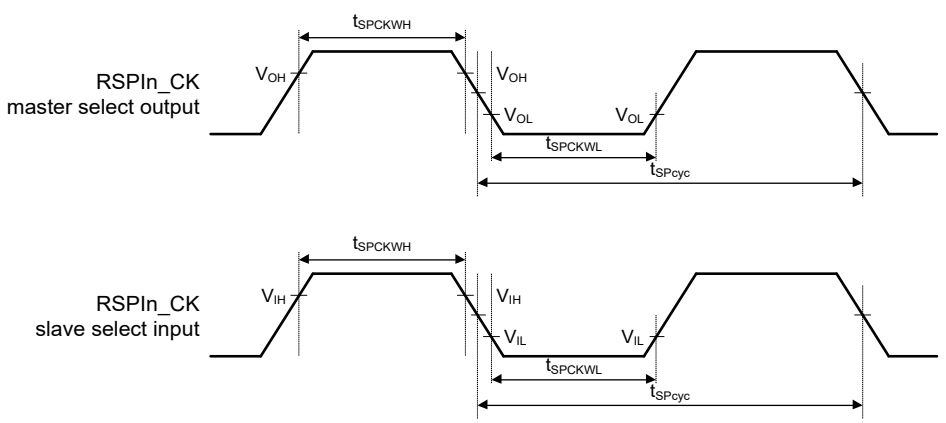

Note: n = 0 to 2

Figure 3.44 Clock Timing

Downloaded from Arrow.com.

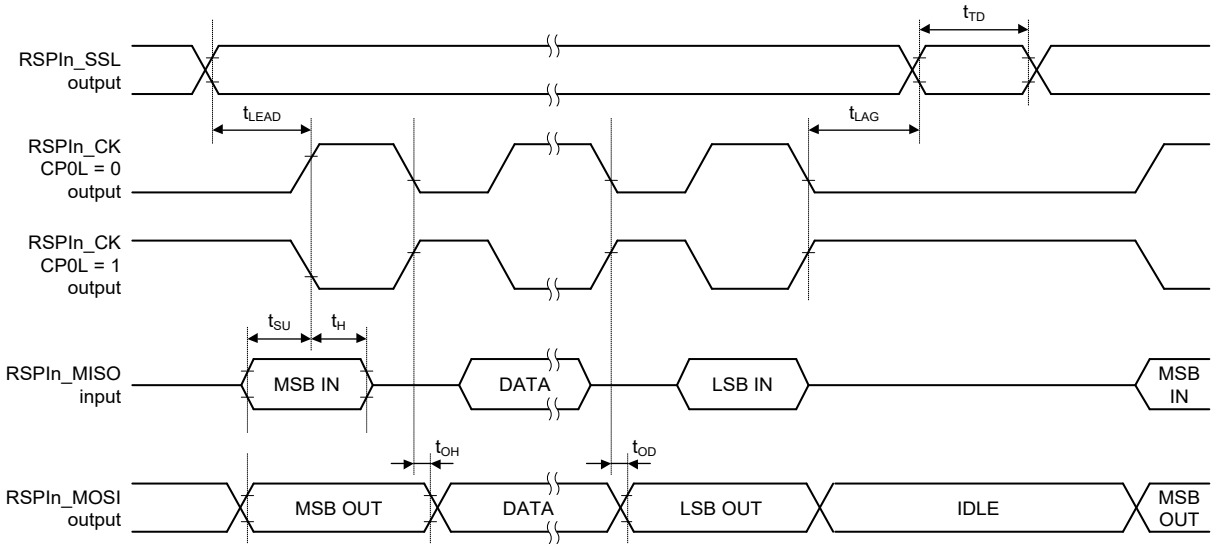

Note: n = 0 to 2

Figure 3.45 Transmission and Reception Timing (Master, CPHA = 0)

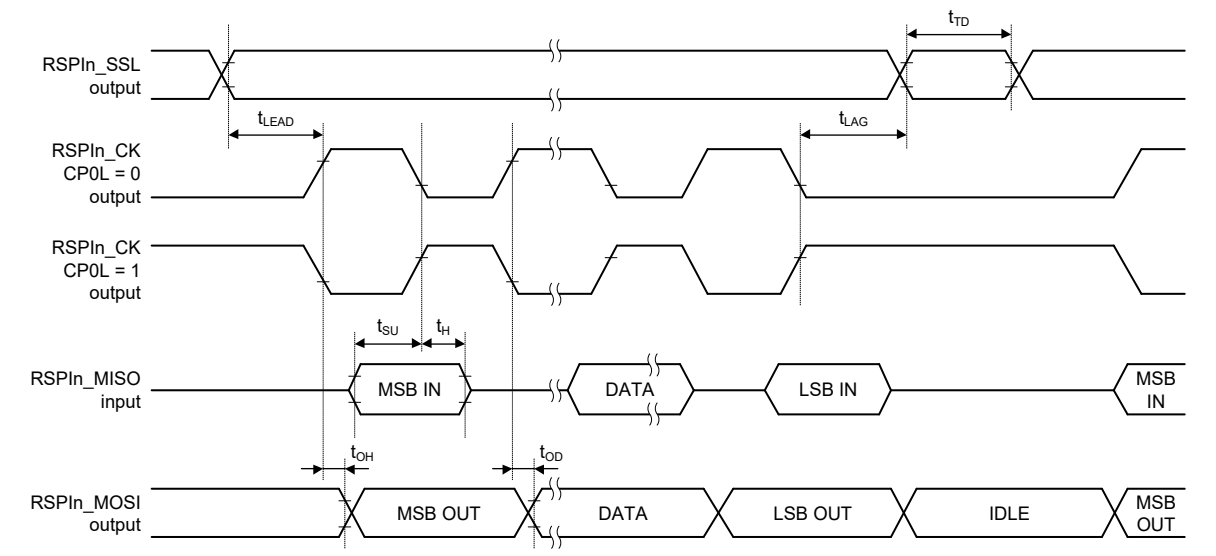

Note: n = 0 to 2

Figure 3.46 Transmission and Reception Timing (Master, CPHA = 1)

Downloaded from Arrow.com.

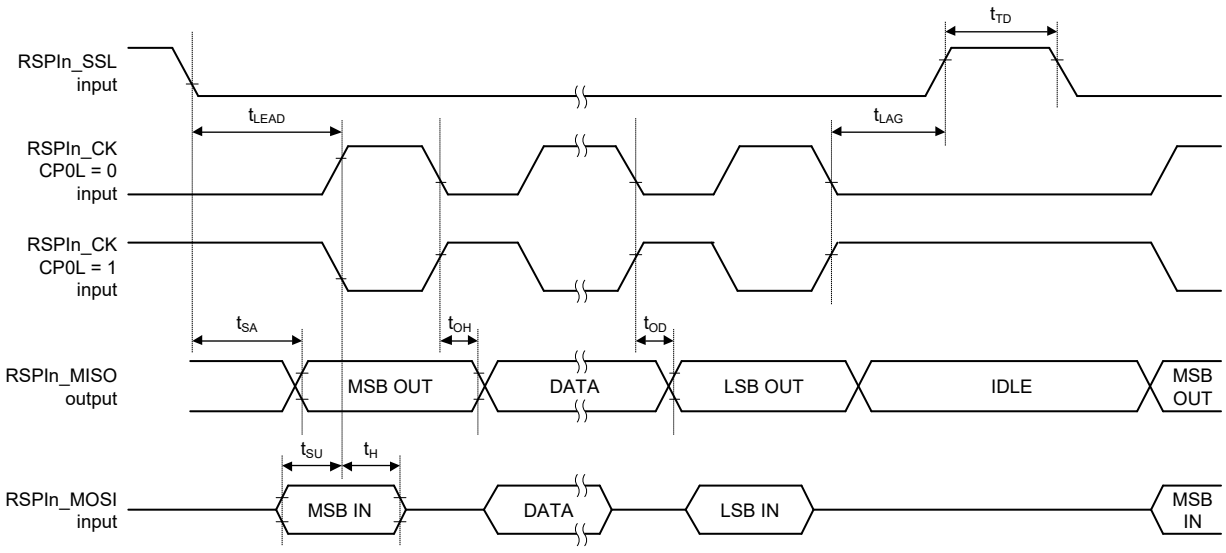

Note: n = 0 to 2

Figure 3.47 Transmission and Reception Timing (Slave, CPHA = 0)

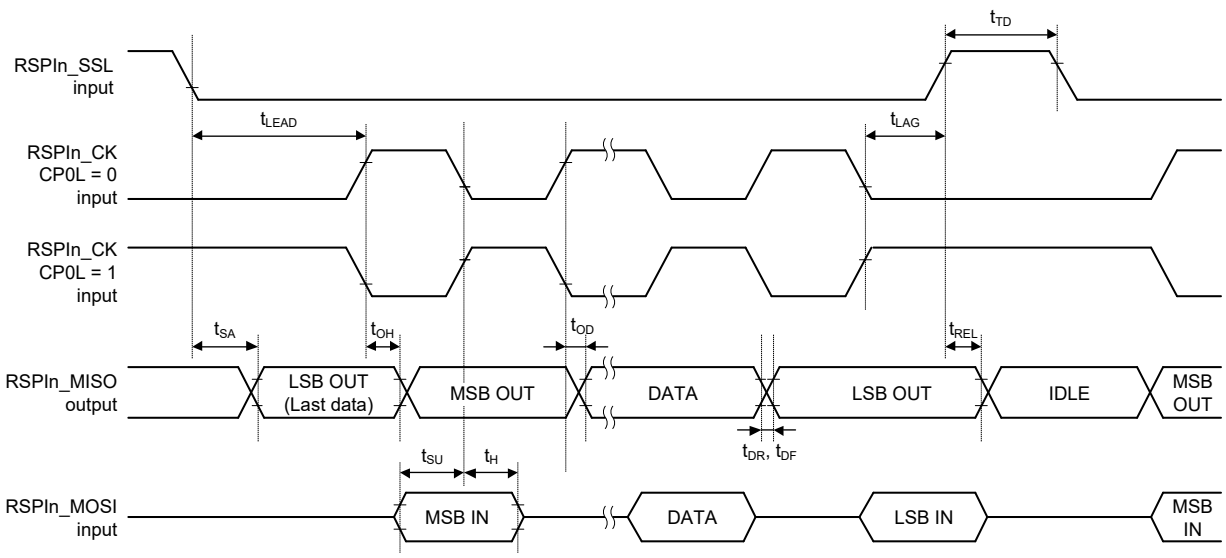

Note: n = 0 to 2

Figure 3.48 Transmission and Reception Timing (Slave, CPHA = 1)

Downloaded from Arrow.com.

3.5.17 A/D Converter Access Timing

Table 3.44 A/D Converter Timing

Item	Symbol	Min.	Max.	Unit	Figures
ADC Trigger Input Pulse Width	t_{TRGW}	1.5*2		t_{P1cyc}*1	**Figure 3.49**

Note 1. t_{p1cyc} indicates peripheral clock means ADC_ADCLK (TSUϕ).

Note 2. When a noise filter in ADC is off.

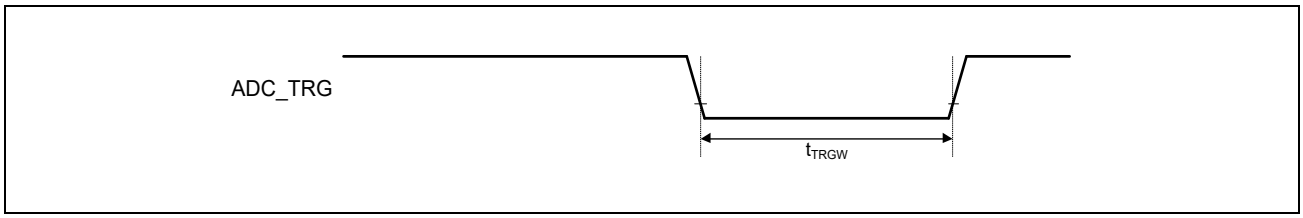

Figure 3.49 ADC Trigger Input Timing

3.5.18 Watchdog Timer Access Timing

Table 3.45 Watchdog Timer Timing

Item	Symbol	Min.	Max.	Unit	Figures
WDTOVF_PERROUT# Output Time	t_L	64	64	t_{P1cyc}*1	**Figure 3.50**

Note 1. t_{P1cyc} indicates peripheral clock means WDTn_CLK (OSCCLK) (n = 0, 2).

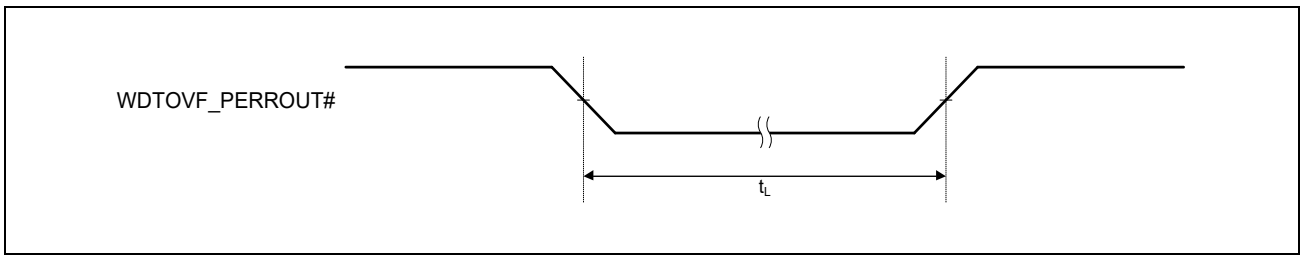

Figure 3.50 Watchdog Timer Output Timing

Downloaded from Arrow.com.

4. Package Dimensions

JEITA Package code	RENESAS code	MASS(TYP.)[g]
P-LFBGA361-13x13-0.50	PLBG0361KB-A	0.40

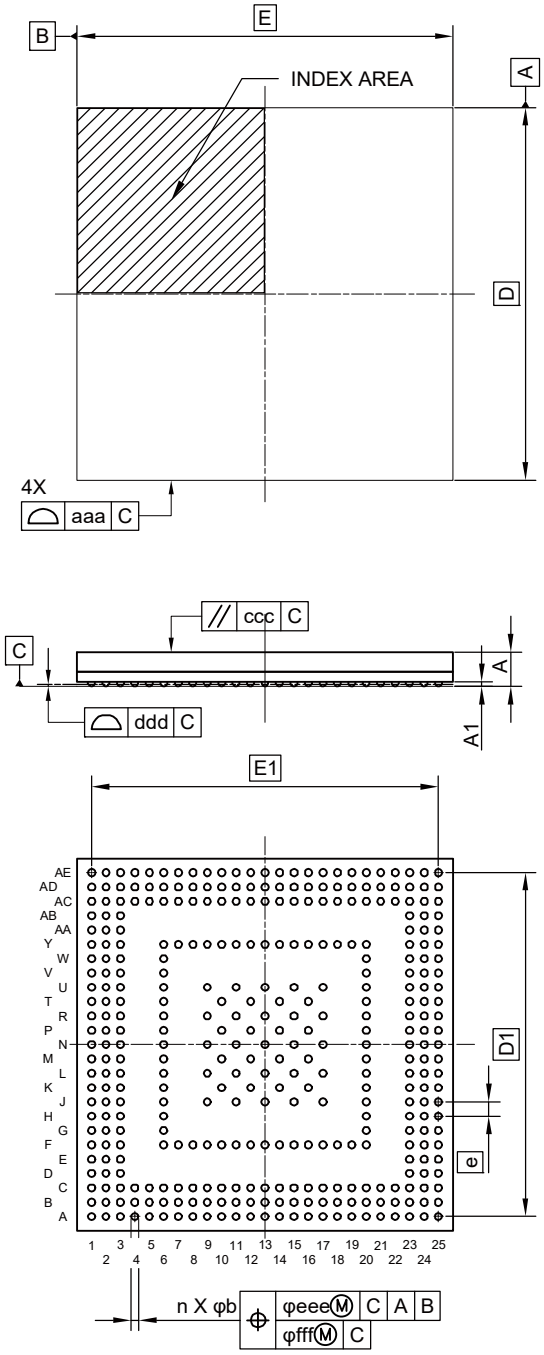

Reference Symbol	Dimension in Millimeters		
	Min.	Nom.	Max.
D	—	13.00	—
E	—	13.00	—
D1	—	12.00	—
E1	—	12.00	—
A	—	—	1.40
A1	0.11	—	—
b	0.20	0.25	0.30
e	—	0.50	—
aaa	—	—	0.15
ccc	—	—	0.20
ddd	—	—	0.08
eee	—	—	0.15
fff	—	—	0.08
n	—	361	—

Figure 4.1 Package Dimensions for LFBGA 13 mm□/0.5 mm pitch/361 pin

Downloaded from Arrow.com.

JEITA Package code	RENESAS code	MASS(TYP.)[g]
P-LFBGA266-11x11-0.50	PLBG0266KA-A	0.29

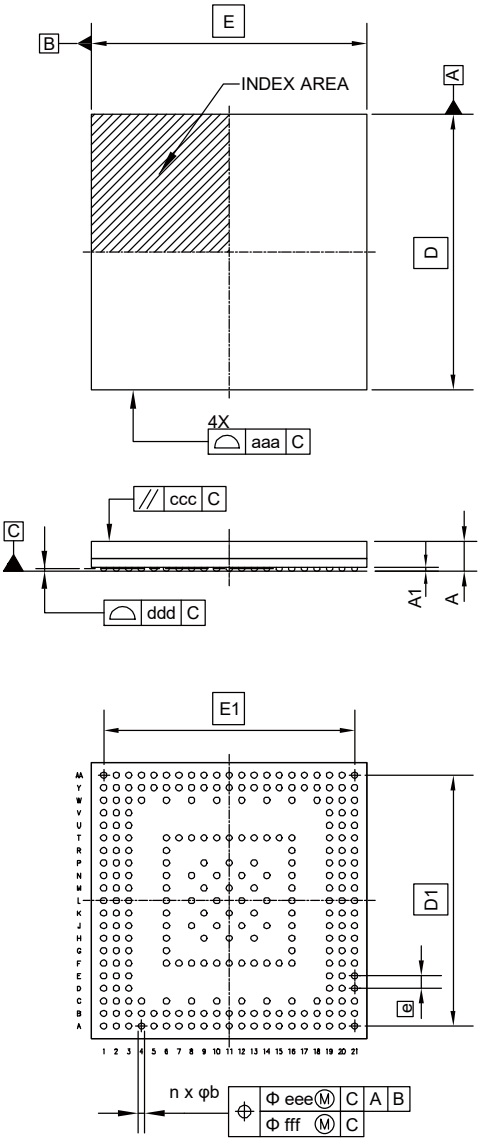

Reference Symbol	Dimension in Millimeters		
	Min.	Nom.	Max.
D	—	11.00	—
E	—	11.00	—
D1	—	10.00	—
E1	—	10.00	—
A	—	—	1.40
A1	0.11	—	—
b	0.20	0.25	0.30
e	—	0.50	—
aaa	—	—	0.15
ccc	—	—	0.20
ddd	—	—	0.08
eee	—	—	0.15
fff	—	—	0.08
n	—	266	—

Figure 4.2 Package Dimensions for LFBGA 11 mm□/0.5 mm pitch/266 pin

Downloaded from Arrow.com.

REVISION HISTORY	RZ/Five Group DATASHEET

Rev.	Date	Description	
		Page	Summary
1.00	Dec 25, 2024	—	First edition issued
1.10	Jun 30, 2025	1. Overview	
		11	Figure 1.1 Configuration of LSI Internal Bus Text, modified (MPU Bus → MCPU Bus) SRC, deleted
		3. Electrical Characteristics	
		18	Table 3.3 DC Characteristics (1) [3.3-V I/O] Input leakage current, added
		19	Table 3.7 DC Characteristics (5) [RGMII/MII] Input logic low (Remarks: 1.8-V RGMII/MII): The Min value, modified
		20	Table 3.9 DC Characteristics (7) [1.8 V I/O (SD, QSPI)] Output logic high voltage: The Min value, modified Output logic low voltage: The Max value, modified
		22	Table 3.18 DC Characteristics (16) [ADC] Full-scale error, Offset error, Analog input capacitance, Analog input resistance, External capacitance, and External resistance, added Note 1, added
		23	Figure 3.4 Analog Input Equivalent Circuit, added
		27	Table 3.21 SDHC AC Access Timing (SDR at 3.3-V Operation) SD_CLK clock high level width, SD_CLK clock low level width, SD_CMD,SD_DATA output delay: The Min values, modified
		28	Table 3.22 eMMC Host Interface Timing (MMC Default 3.3-V Power Supply) SD0_CLK clock cycle, SD0_CLK clock high level width, SD0_CLK clock low level width, SD0_CMD/SDDAT output delay: The Min values, modified
		28	Table 3.23 eMMC Host Interface Timing (MMC Default 1.8-V Power Supply) SD0_CLK clock cycle, SD0_CLK clock high level width, SD0_CLK clock low level width: The Min values, modified SD0_CMD/SDDAT output delay: The Min and Max values, modified
		29	3.5.3.2 eMMC host interface timing (HS-SDR), modified
		30	Table 3.26 eMMC Host Interface Timing (HS200 1.8-V Power Supply Operation, Output Load 15 pF) SD0_CLK clock high level width, SD0_CLK clock low level width: The Min values, modified SD0_CMD/SDDAT output delay: The Min and Max values, modified
		36	Table 3.32 Ethernet-IF Access Timing (Ether RGMII) Duty cycle for gigabit: The Min and Max values, modified Note, modified

Downloaded from Arrow.com.

General Precautions in the Handling of Microprocessing Unit and Microcontroller Unit Products

The following usage notes are applicable to all Microprocessing unit and Microcontroller unit products from Renesas. For detailed usage notes on the products covered by this document, refer to the relevant sections of the document as well as any technical updates that have been issued for the products.

1. Precaution against Electrostatic Discharge (ESD)
   A strong electrical field, when exposed to a CMOS device, can cause destruction of the gate oxide and ultimately degrade the device operation. Steps must be taken to stop the generation of static electricity as much as possible, and quickly dissipate it when it occurs. Environmental control must be adequate. When it is dry, a humidifier should be used. This is recommended to avoid using insulators that can easily build up static electricity. Semiconductor devices must be stored and transported in an anti-static container, static shielding bag or conductive material. All test and measurement tools including work benches and floors must be grounded. The operator must also be grounded using a wrist strap. Semiconductor devices must not be touched with bare hands. Similar precautions must be taken for printed circuit boards with mounted semiconductor devices.
2. Processing at power-on
   The state of the product is undefined at the time when power is supplied. The states of internal circuits in the LSI are indeterminate and the states of register settings and pins are undefined at the time when power is supplied. In a finished product where the reset signal is applied to the external reset pin, the states of pins are not guaranteed from the time when power is supplied until the reset process is completed. In a similar way, the states of pins in a product that is reset by an on-chip power-on reset function are not guaranteed from the time when power is supplied until the power reaches the level at which resetting is specified.
3. Input of signal during power-off state
   Do not input signals or an I/O pull-up power supply while the device is powered off. The current injection that results from input of such a signal or I/O pull-up power supply may cause malfunction and the abnormal current that passes in the device at this time may cause degradation of internal elements. Follow the guideline for input signal during power-off state as described in your product documentation.
4. Handling of unused pins
   Handle unused pins in accordance with the directions given under handling of unused pins in the manual. The input pins of CMOS products are generally in the high-impedance state. In operation with an unused pin in the open-circuit state, extra electromagnetic noise is induced in the vicinity of the LSI, an associated shoot-through current flows internally, and malfunctions occur due to the false recognition of the pin state as an input signal become possible.
5. Clock signals
   After applying a reset, only release the reset line after the operating clock signal becomes stable. When switching the clock signal during program execution, wait until the target clock signal is stabilized. When the clock signal is generated with an external resonator or from an external oscillator during a reset, ensure that the reset line is only released after full stabilization of the clock signal. Additionally, when switching to a clock signal produced with an external resonator or by an external oscillator while program execution is in progress, wait until the target clock signal is stable.
6. Voltage application waveform at input pin
   Waveform distortion due to input noise or a reflected wave may cause malfunction. If the input of the CMOS device stays in the area between V_{IL} (Max.) and V_{IH} (Min.) due to noise, for example, the device may malfunction. Take care to prevent chattering noise from entering the device when the input level is fixed, and also in the transition period when the input level passes through the area between V_{IL} (Max.) and V_{IH} (Min.).
7. Prohibition of access to reserved addresses
   Access to reserved addresses is prohibited. The reserved addresses are provided for possible future expansion of functions. Do not access these addresses as the correct operation of the LSI is not guaranteed.
8. Differences between products
   Before changing from one product to another, for example to a product with a different part number, confirm that the change will not lead to problems. The characteristics of a microprocessing unit or microcontroller unit products in the same group but having a different part number might differ in terms of internal memory capacity, layout pattern, and other factors, which can affect the ranges of electrical characteristics, such as characteristic values, operating margins, immunity to noise, and amount of radiated noise. When changing to a product with a different part number, implement a system-evaluation test for the given product.

Downloaded from Arrow.com.

Notice

1. Descriptions of circuits, software and other related information in this document are provided only to illustrate the operation of semiconductor products and application examples. You are fully responsible for the incorporation or any other use of the circuits, software, and information in the design of your product or system. Renesas Electronics disclaims any and all liability for any losses and damages incurred by you or third parties arising from the use of these circuits, software, or information.
2. Renesas Electronics hereby expressly disclaims any warranties against and liability for infringement or any other claims involving patents, copyrights, or other intellectual property rights of third parties, by or arising from the use of Renesas Electronics products or technical information described in this document, including but not limited to, the product data, drawings, charts, programs, algorithms, and application examples.
3. No license, express, implied or otherwise, is granted hereby under any patents, copyrights or other intellectual property rights of Renesas Electronics or others.
4. You shall be responsible for determining what licenses are required from any third parties, and obtaining such licenses for the lawful import, export, manufacture, sales, utilization, distribution or other disposal of any products incorporating Renesas Electronics products, if required.
5. You shall not alter, modify, copy, or reverse engineer any Renesas Electronics product, whether in whole or in part. Renesas Electronics disclaims any and all liability for any losses or damages incurred by you or third parties arising from such alteration, modification, copying or reverse engineering.
6. Renesas Electronics products are classified according to the following two quality grades: “Standard” and “High Quality”. The intended applications for each Renesas Electronics product depends on the product’s quality grade, as indicated below.
   "Standard": Computers; office equipment; communications equipment; test and measurement equipment; audio and visual equipment; home electronic appliances; machine tools; personal electronic equipment; industrial robots; etc.
   "High Quality": Transportation equipment (automobiles, trains, ships, etc.); traffic control (traffic lights); large-scale communication equipment; key financial terminal systems; safety control equipment; etc.
   Unless expressly designated as a high reliability product or a product for harsh environments in a Renesas Electronics data sheet or other Renesas Electronics document, Renesas Electronics products are not intended or authorized for use in products or systems that may pose a direct threat to human life or bodily injury (artificial life support devices or systems; surgical implantations; etc.), or may cause serious property damage (space system; undersea repeaters; nuclear power control systems; aircraft control systems; key plant systems; military equipment; etc.). Renesas Electronics disclaims any and all liability for any damages or losses incurred by you or any third parties arising from the use of any Renesas Electronics product that is inconsistent with any Renesas Electronics data sheet, user’s manual or other Renesas Electronics document.
7. No semiconductor product is absolutely secure. Notwithstanding any security measures or features that may be implemented in Renesas Electronics hardware or software products, Renesas Electronics shall have absolutely no liability arising out of any vulnerability or security breach, including but not limited to any unauthorized access to or use of a Renesas Electronics product or a system that uses a Renesas Electronics product. RENESAS ELECTRONICS DOES NOT WARRANT OR GUARANTEE THAT RENESAS ELECTRONICS PRODUCTS, OR ANY SYSTEMS CREATED USING RENESAS ELECTRONICS PRODUCTS WILL BE INVULNERABLE OR FREE FROM CORRUPTION, ATTACK, VIRUSES, INTERFERENCE, HACKING, DATA LOSS OR THEFT, OR OTHER SECURITY INTRUSION (“Vulnerability Issues”). RENESAS ELECTRONICS DISCLAIMS ANY AND ALL RESPONSIBILITY OR LIABILITY ARISING FROM OR RELATED TO ANY VULNERABILITY ISSUES. FURTHERMORE, TO THE EXTENT PERMITTED BY APPLICABLE LAW, RENESAS ELECTRONICS DISCLAIMS ANY AND ALL WARRANTIES, EXPRESS OR IMPLIED, WITH RESPECT TO THIS DOCUMENT AND ANY RELATED OR ACCOMPANYING SOFTWARE OR HARDWARE, INCLUDING BUT NOT LIMITED TO THE IMPLIED WARRANTIES OF MERCHANTABILITY, OR FITNESS FOR A PARTICULAR PURPOSE.
8. When using Renesas Electronics products, refer to the latest product information (data sheets, user’s manuals, application notes, “General Notes for Handling and Using Semiconductor Devices” in the reliability handbook, etc.), and ensure that usage conditions are within the ranges specified by Renesas Electronics with respect to maximum ratings, operating power supply voltage range, heat dissipation characteristics, installation, etc. Renesas Electronics disclaims any and all liability for any malfunctions, failure or accident arising out of the use of Renesas Electronics products outside of such specified ranges.
9. Although Renesas Electronics endeavors to improve the quality and reliability of Renesas Electronics products, semiconductor products have specific characteristics, such as the occurrence of failure at a certain rate and malfunctions under certain use conditions. Unless designated as a high reliability product or a product for harsh environments in a Renesas Electronics data sheet or other Renesas Electronics document, Renesas Electronics products are not subject to radiation resistance design. You are responsible for implementing safety measures to guard against the possibility of bodily injury, injury or damage caused by fire, and/or danger to the public in the event of a failure or malfunction of Renesas Electronics products, such as safety design for hardware and software, including but not limited to redundancy, fire control and malfunction prevention, appropriate treatment for aging degradation or any other appropriate measures. Because the evaluation of microcomputer software alone is very difficult and impractical, you are responsible for evaluating the safety of the final products or systems manufactured by you.
10. Please contact a Renesas Electronics sales office for details as to environmental matters such as the environmental compatibility of each Renesas Electronics product. You are responsible for carefully and sufficiently investigating applicable laws and regulations that regulate the inclusion or use of controlled substances, including without limitation, the EU RoHS Directive, and using Renesas Electronics products in compliance with all these applicable laws and regulations. Renesas Electronics disclaims any and all liability for damages or losses occurring as a result of your noncompliance with applicable laws and regulations.
11. Renesas Electronics products and technologies shall not be used for or incorporated into any products or systems whose manufacture, use, or sale is prohibited under any applicable domestic or foreign laws or regulations. You shall comply with any applicable export control laws and regulations promulgated and administered by the governments of any countries asserting jurisdiction over the parties or transactions.
12. It is the responsibility of the buyer or distributor of Renesas Electronics products, or any other party who distributes, disposes of, or otherwise sells or transfers the product to a third party, to notify such third party in advance of the contents and conditions set forth in this document.
13. This document shall not be reprinted, reproduced or duplicated in any form, in whole or in part, without prior written consent of Renesas Electronics.
14. Please contact a Renesas Electronics sales office if you have any questions regarding the information contained in this document or Renesas Electronics products.

(Note1) “Renesas Electronics” as used in this document means Renesas Electronics Corporation and also includes its directly or indirectly controlled subsidiaries.

(Note2) “Renesas Electronics product(s)” means any product developed or manufactured by or for Renesas Electronics.

(Rev.5.0-1 October 2020)

Corporate Headquarters

TOYOSU FORESIA, 3-2-24 Toyosu,
Koto-ku, Tokyo 135-0061, Japan
www.renesas.com

Contact information

For further information on a product, technology, the most up-to-date version of a document, or your nearest sales office, please visit:
www.renesas.com/contact/

Trademarks

Renesas and the Renesas logo are trademarks of Renesas Electronics Corporation. All trademarks and registered trademarks are the property of their respective owners.

© 2025 Renesas Electronics Corporation. All rights reserved.

Downloaded from Arrow.com.

Trademarks (continued)

AndesCore™ AX45MP is a trademark owned by Andes Technology Corporation.
AMBA®: AMBA is a registered trademark of Arm Limited.
CoreLink™: CoreLink is a trademark of Arm Limited.
TrustZone®: TrustZone is a registered trademark of Arm Limited.
eMMC™: eMMC is a trademark of MultiMediaCard Association.

© 2025 Renesas Electronics Corporation. All rights reserved.

Downloaded from Arrow.com.