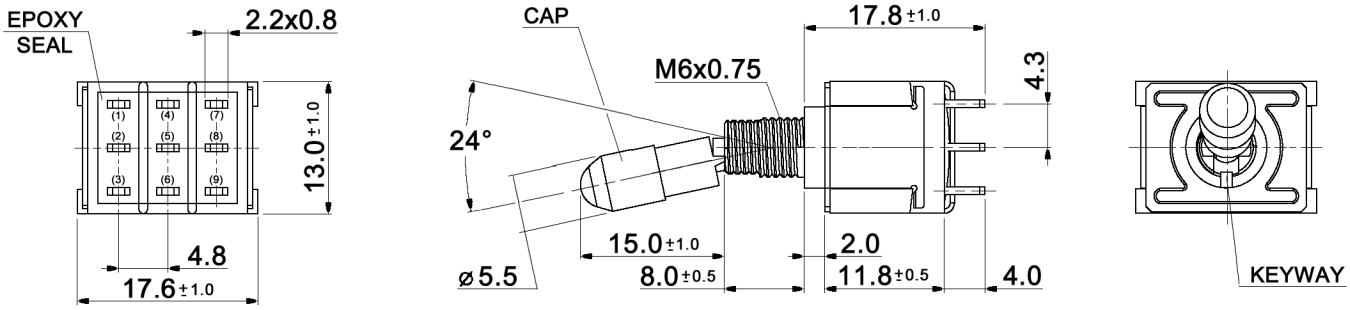

PANEL MOUNTING

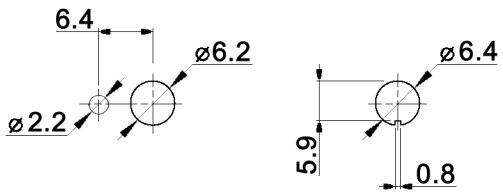

code for x	function	toggle towards keyway	toggle opposite to keyway
D	On-On	1-2, 4-5, 7-8	2-3, 5-6, 8-9

code for x	function	toggle towards keyway	toggle in center	toggle opposite to keyway
E	On-Off-On	1-2, 4-5, 7-8	open	2-3, 5-6, 8-9
EA	On-On-On	1-2, 4-5, 7-8	2-3, 4-5, 8-9	2-3, 5-6, 8-9

Compliance: RohS III (2015/863/EU)

Tolerances: 0.00: ±0.25mm 0.0: ±0.40mm			Date	Name	MTL 306 x	
			07/08	dr		
Accessory	02/25	dr	knitter-switch		30 15 28	Page
Revised	10/17	dr				1/2
Modifications	Date	Name				

Downloaded from Arrow.com.

Specifications:

Contact rating:	3A, 250V AC / 6A, 125V AC 4A, 30V DC / 5A, 12V DC 6A, 6V DC
Contact resistance:	20mOhm max.
Insulation resistance:	1 000MOhm min. at 500V DC
Dielectric strength:	1 500V, 50Hz for the duration of 1 minute
Operating temperature:	-45°C to +140°C
Mechanical life:	200 000 make-and-break cycles
Soldering conditions:	hand-soldering: max.: 420°C, 3sec., 60W auto-soldering: max.: 270°C, 5sec.
Mounting instruction:	max. torque: 49Ncm
Material:	Terminal: brass, C1020 silver plated Case: DAP Housing: stainless steel, CNS9265 Bushing: copper alloy, C3604BD nickel plated Actuator: copper alloy, C3604BD chrome plated Cap: aluminium, (not included)
Accessory:	(included)

TOOTH WASHER, T 1440-1M03
Material: SUS 304

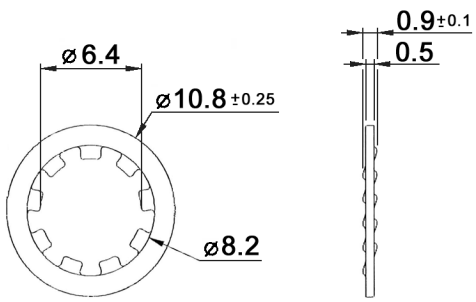

LOCK WASHER, L 675-1M05
Material: SPCC, nickel plated

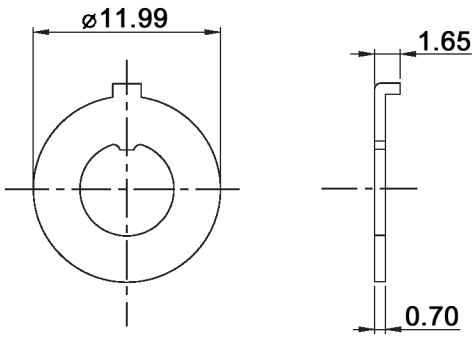

NUT, H 675-1M41
Material: C3604, nickel plated

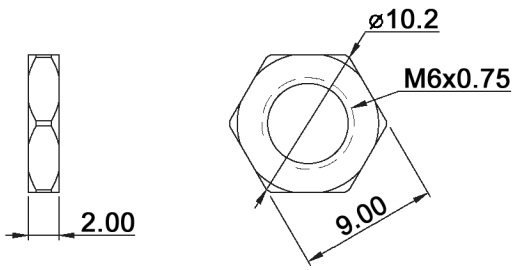

Compliance: RohS III (2015/863/EU)

Tolerances: 0.00: ±0.25mm 0.0: ±0.40mm			Date 07/08	Name dr	MTL 306 x
Accessory	02/25	dr	knitter-switch	30 15 28	Page 2/2
Revised	10/17	dr			
Modifications	Date	Name			

Downloaded from Arrow.com.