Data Sheet | Item Number: 790-300

Busbar carrier; for busbars Cu 10 mm x 3 mm; single side, straight; for DIN 35 rail; silver-colored

https://www.wago.com/790-300

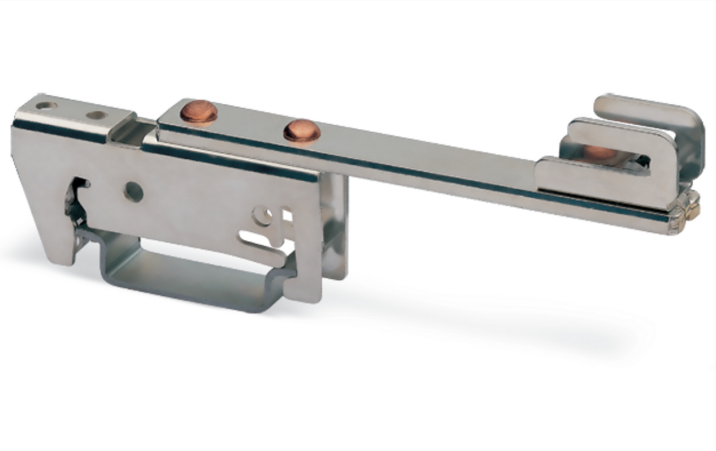

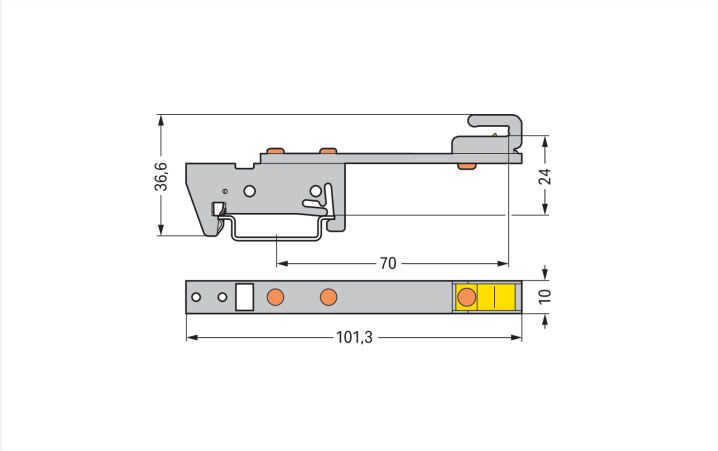

Color: silver-colored

Dimensions in mm

Material data	
Color	silver-colored
Weight	37.5 g
Material	Coated steel Stainless steel Copper (Cu)

Commercial data	
Product Group	2 (Terminal Block Accessories)
PU (SPU)	10 pcs
Packaging type	Box
Country of origin	DE
GTIN	4045454415891
Customs tariff number	85369001000

Product Classification	
UNSPSC	39121613
eCl@ss 10.0	27-40-06-07
eCl@ss 9.0	27-40-06-07
ETIM 9.0	EC001166
ETIM 10.0	EC001166
ECCN	NO US CLASSIFICATION

Downloaded from Arrow.com.

Environmental Product Compliance

RoHS Compliance Status	Compliant,No Exemption

Environmental requirements

Processing temperature (min.)	-35 °C
Processing temperature (max.)	85 °C
Processing temperature	-35 ... +85 °C
Continuous operating temperature from	-60 °C
Continuous operating temperature up to	105 °C
Continuous operating temperature	-60 ... +105 °C

Downloads

Environmental Product Compliance

Compliance Search

Environmental Product Compliance 790-300

Documentation

Bid Text

790-300	19.02.2019	xml 2.69 KB	
790-300	28.11.2018	doc 23.00 KB	

CAD/CAE-Data

CAD data

2D/3D Models 790-300

CAE data

EPLAN Data Portal 790-300

WSCAD Universe 790-300

ZUKEN Portal 790-300

Downloaded from Arrow.com.

1 Compatible Products

1.1 Optional Accessories

1.1.1 N-busbar

1.1.1.1 Busbar

Item No.: 210-133
Busbar; tin-plated; 1000 mm long; Cu 10 mm x 3 mm; white

1.1.1.2 Mounting accessories

Item No.: 790-134
Busbar; tin-plated; 50 mm long; Cu 10 mm x 3 mm; silver-colored

Installation Notes

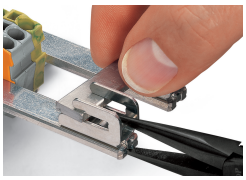

To remove the busbar, compress the spring using pliers.

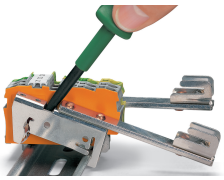

Remove the busbar carrier using an operating tool (type 3, 5.5 x 0.8 mm blade).

Downloaded from Arrow.com.