Alle Rechte vorbehalten/ *All rights reserved*

Mating face according to : MIL-C-24308 / DIN 41652 / CECC 75301-802

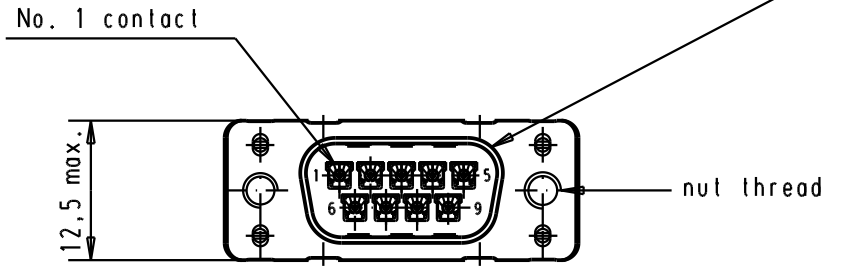

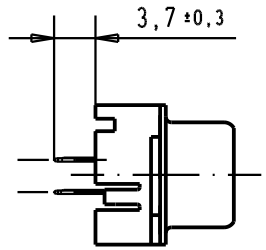

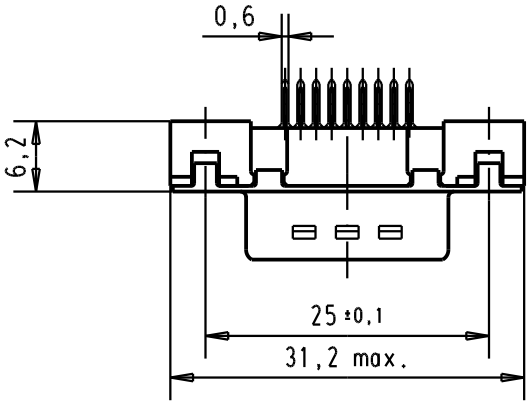

Printed board layout
component side

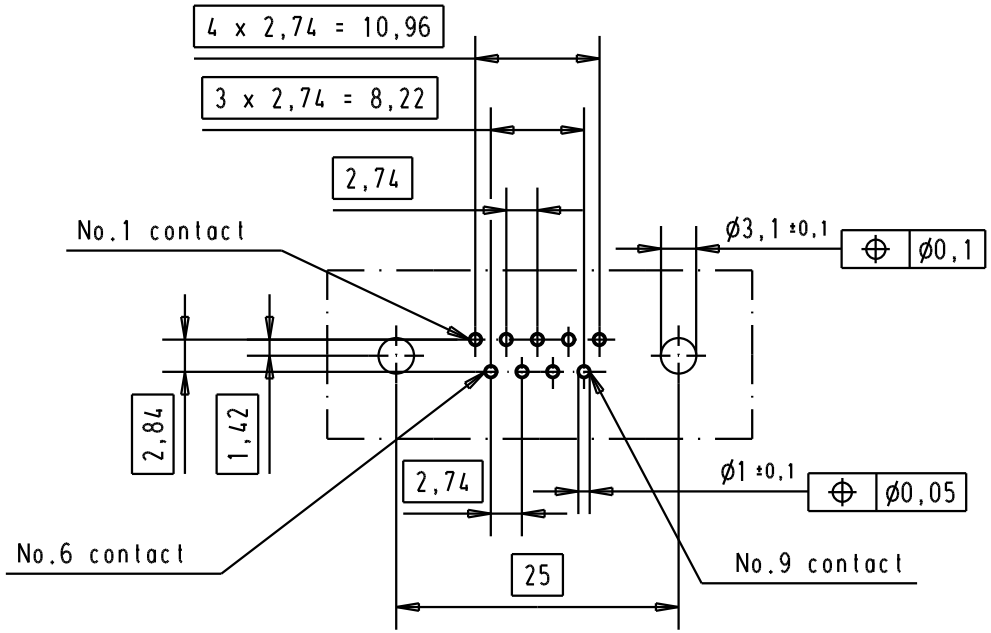

09 65 121 3701	M3	1			
09 65 121 6701	M3	2			
09 65 121 7701	M3	3			
09 65 121 3702	4-40 UNC	1			
09 65 121 6702	4-40 UNC	2	31892	22/04/04	JH
09 65 121 7702	4-40 UNC	3	29723	05/03/02	CV
Part number	Nut thread	Performance level	Mod.	Dat.	Name

	Dat.	Name
Detail.	05/03/02	CV
Insp.		
Stand.		

All Dim. in mm
Orig. Size DIN A 4

D-Sub, 9 poles,
male, straight,
with solder pins 3.7,
and nuts.

Maßstab/ *Scale* 1,5:1

HARTING EURL
F-95972 Paris

TB 09 65 121 X70X

Sub.

Blatt/ *Page* 2

Downloaded from Arrow.com.