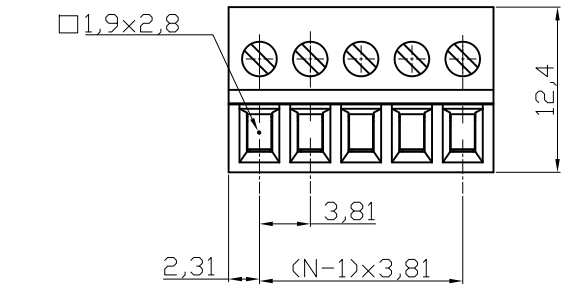

N= NUMBER OF CONTACTS

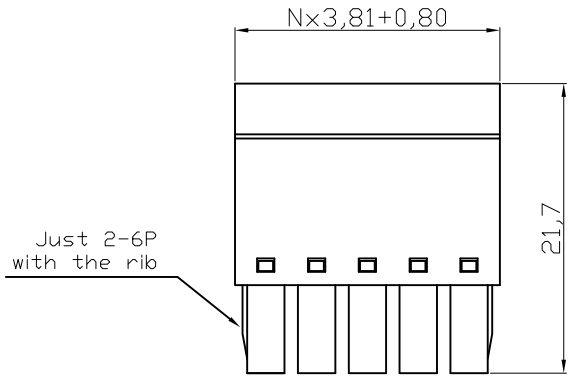

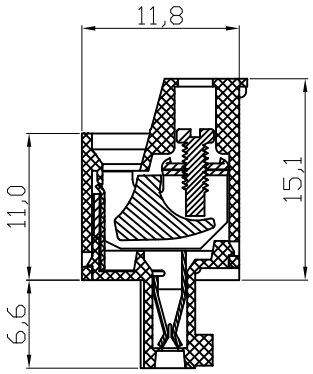

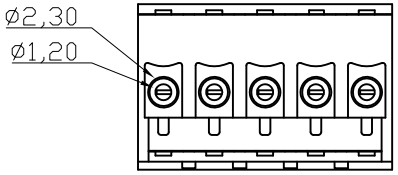

Material
- Clamp: Steel Zinc plating
- Terminal screw: Steel Zinc plating"-"slot type
- Female contact: PhBz tin plated
- Terminal (Up body): Thermoplastic (UL94V-0),Green
- Terminal (Down body): Thermoplastic (UL94V-0),Green
- Clampcage: Steel Zinc plated

Electrical cULus
- Voltage rating: 300VAC
- Current rating: 10A
- Wire range:
- Solid wire(AWG): 16-28
- Stranded wire (AWG): 16-28
- Torque: 1.7Lb-In.
- Screw: M2
- Wire strip length: 6-7mm
- Withstanding Voltage: 1.6KV
- Operating temperature: -40°C to +115°C
- Safety Approval: c UL us

RoHS compliant

Scale	1:1						Date	Name
TOLERANCE						Drawn	10.12.2009	Dean
X.	±0.50					Approved	27.08.2010	Hellwig
X.X	±0.30							
X.XX	±0.10							
DIM	TOL	②	Update	27.08.2010	Rale			
X.°	±1°	①	Drawn	10.12.2009	Dean			
Angle	TOL	Id.	Modification	Date	Name			

Customer-No.

ASSMANN WSW-No.
A-TB381-VMxx

Drawing-No.
ASS 3847 CO

rev02

Replace

Sheet

ASSMANN WSW components

SV2042

Downloaded from Arrow.com.