MICRO SWITCH
A DIVISION OF MINNEAPOLIS-HONEYWELL REGULATOR COMPANY
FREEPORT, ILLINOIS
FED. MFR. CODE 91929

SWITCH—BASIC

CATALOG LISTING
BZ-2RQ1-D6

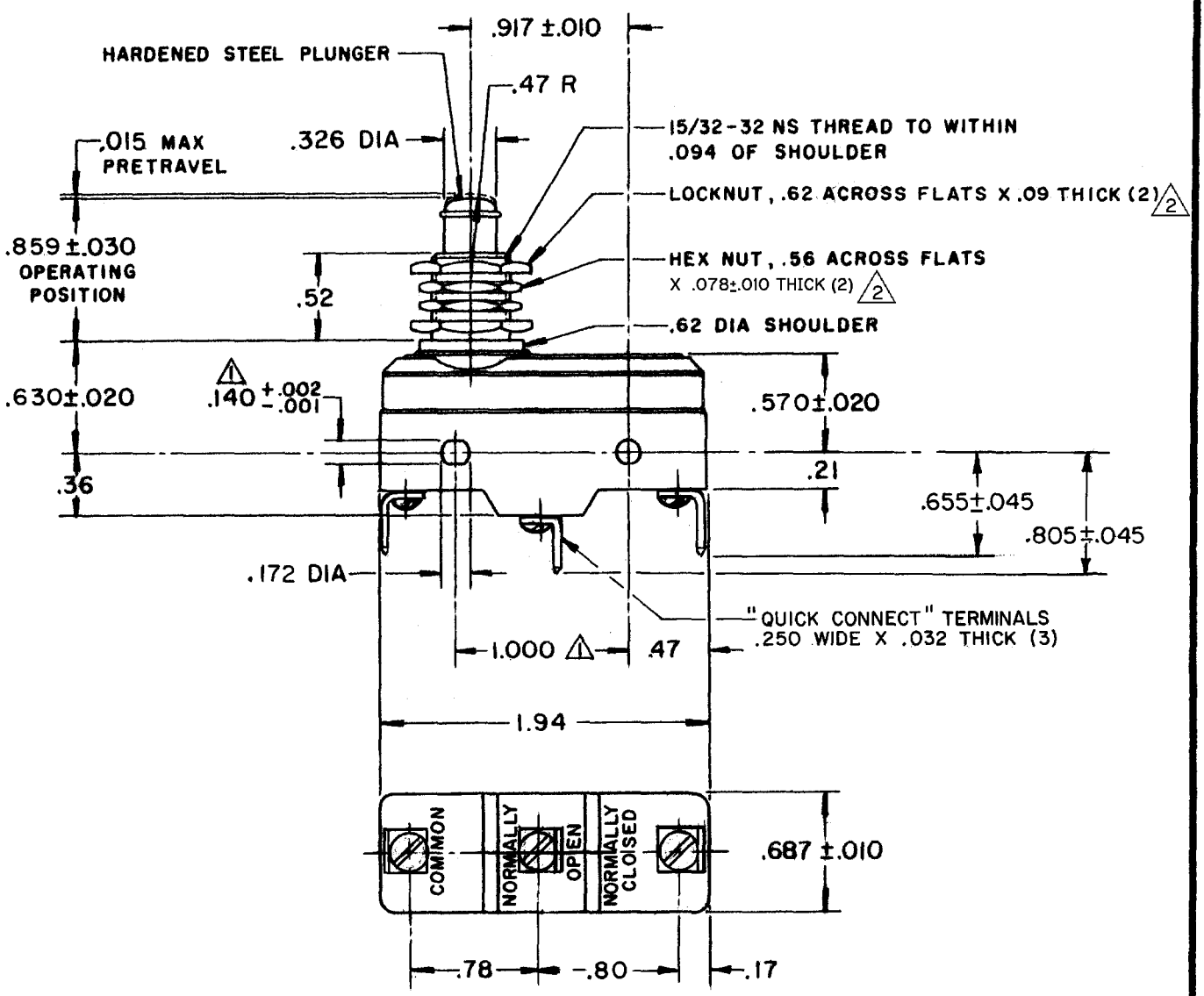

NOTES
1. MOUNTING HOLES WILL ACCEPT PINS OR SCREWS OF .139 MAX DIA ON 1.000±.002 CENTERS
2. HARDWARE FURNISHED UNASSEMBLED

THIS DRAWING COVERS A PROPRIETARY ITEM AND IS THE PROPERTY OF MICRO SWITCH, A DIVISION OF MINNEAPOLIS-HONEYWELL REGULATOR CO. THIS DRAWING IS NOT TO BE COPIED OR USED WITHOUT THE APPROVAL OF MICRO SWITCH.

CHARACTERISTICS

OPERATING FORCE	9-13 OZ
RELEASE FORCE	4 OZ MIN
DIFFERENTIAL TRAVEL	.0004-.002
OVERTRAVEL	.219 MIN

ELECTRICAL DATA

CONTACT ARRANGEMENT
S P D T

UNDERWRITERS' LAB. INC. LISTED RATING
-L96- 15A-125, 250, OR 480 VAC
1/2 A-125 VDC; 1/4 A-250 VDC
1/8 HP-125 VAC; 1/4 HP-250 VAC
-L288-
-L299-
-L306-
16A 250V ~ T85 5E4

SCALE FULL
DO NOT SCALE PRINT

UNLESS OTHERWISE SPECIFIED
DIMENSIONS ARE IN INCHES
TOLERANCES ARE:

ONE PLACE	(.0)	±.030
TWO PLACE	(.00)	±.015
THREE PLACE	(.000)	±.005
ANGLES		±

WEIGHT .094 LB

BZ-2RQ1-D6
PAGE 1 OF 1
M
DRAWING NUMBER
ISSUE 11
RELEASE NO. PR-2594
REPLACES

REVISIONS

A	CO14866	J I D 8 AUG 60
B	OBS DWG CO18857	H B W 28 JAN 64
C	REINS ETS	R L D 9 FEB 66
D	PR-2594	S R H 20 APR 72
E	CO 46317	S M A 4 SEPT 79
F	PR8349	S L B 17 DEC 79
G	CO-77589	J A L 30 MAR 94
H	CO 80938	DLT 12 JUN 95
J	CO-82133	CSL 30 JUL 96
K	C093346	DLT 10 SEP 98

CHECK 7 JUL 60
CHECK RCH 7 JUL 60
CHECK
DRAWN MBF 7 JULY 60

FORMTEK
FO-50378

Downloaded from Arrow.com.