AUTOMOTIVE SPEAKER

Product No. 130622

BMS36-11-08H06-FR3-06-TYW-P1.0

Issue No. BS/TES01.2365

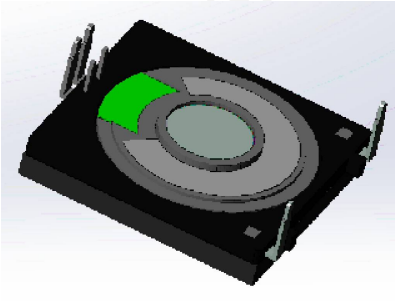

Features:

- Large power
- Loud sound output
- RoHS

Drawn by	Checked by	Approved by	Customer approved
Judy.Yang	Grubby.Gao	Jason.Zhang	

BESTAR Holdings Co., Ltd.

www.be-star.com | info@be-star.com

Downloaded from Arrow.com.

Content:

1 Characteristics 3
1.1 Technical terms 3
1.2 Test method 4
1.3 Frequency Response Curve 5
1.4 F0 Curve 6
1.5 Total Harmonic Distortion 7
2 Part List 8
3 Dimension 9
4 Reliability Test 10-11
5 Packing 12
6 History change record 13
7 Important Notice 14

Downloaded from Arrow.com.

1.Characteristics

1.1Technical terms

1. Size	39.6*42.5*16.1mm
2. Impedance at 1KHz	8±2Ω
3. Resonance frequency	600±20%Hz
4.Frequency Response	F0~5000Hz
4. Rated input power	1W(2.83V)
5. Maximum input power	2W (4.0V)
6. Buzz & Rattle(at sine wave 2.83V)	must be normal
7. SPL(1W 1m sine wave)	80±3dB (at 1KHz)
8. Operating temperature	-40...+90℃
9. Storage temperature	-40...+90℃
10.Weight	≈9g

Downloaded from Arrow.com.

1.2 Test method:

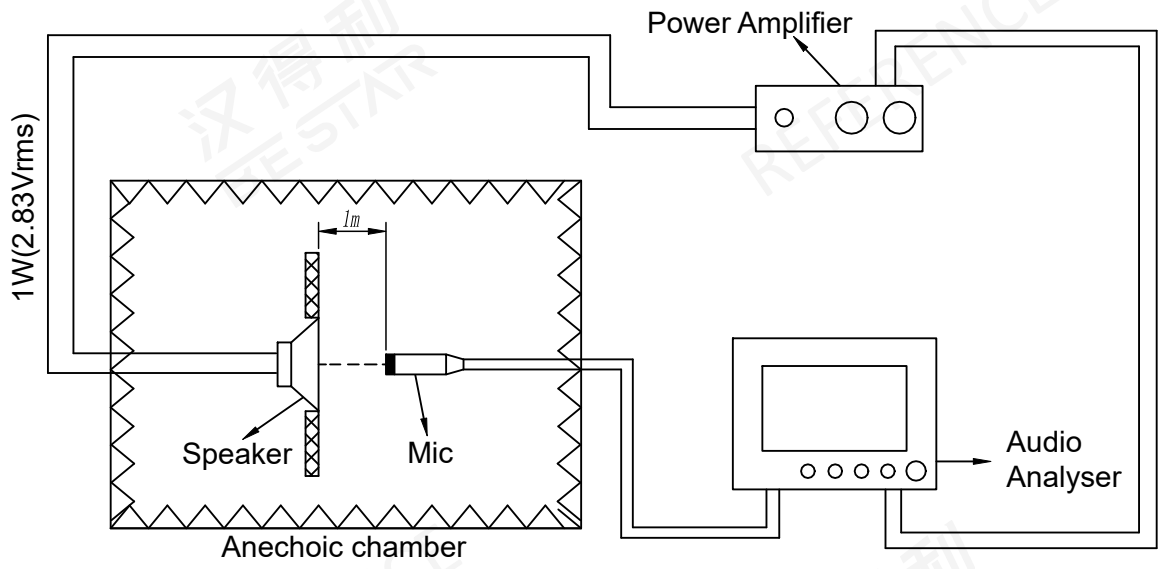

Downloaded from Arrow.com.

1.3 Frequency Response Curve (only for reference)

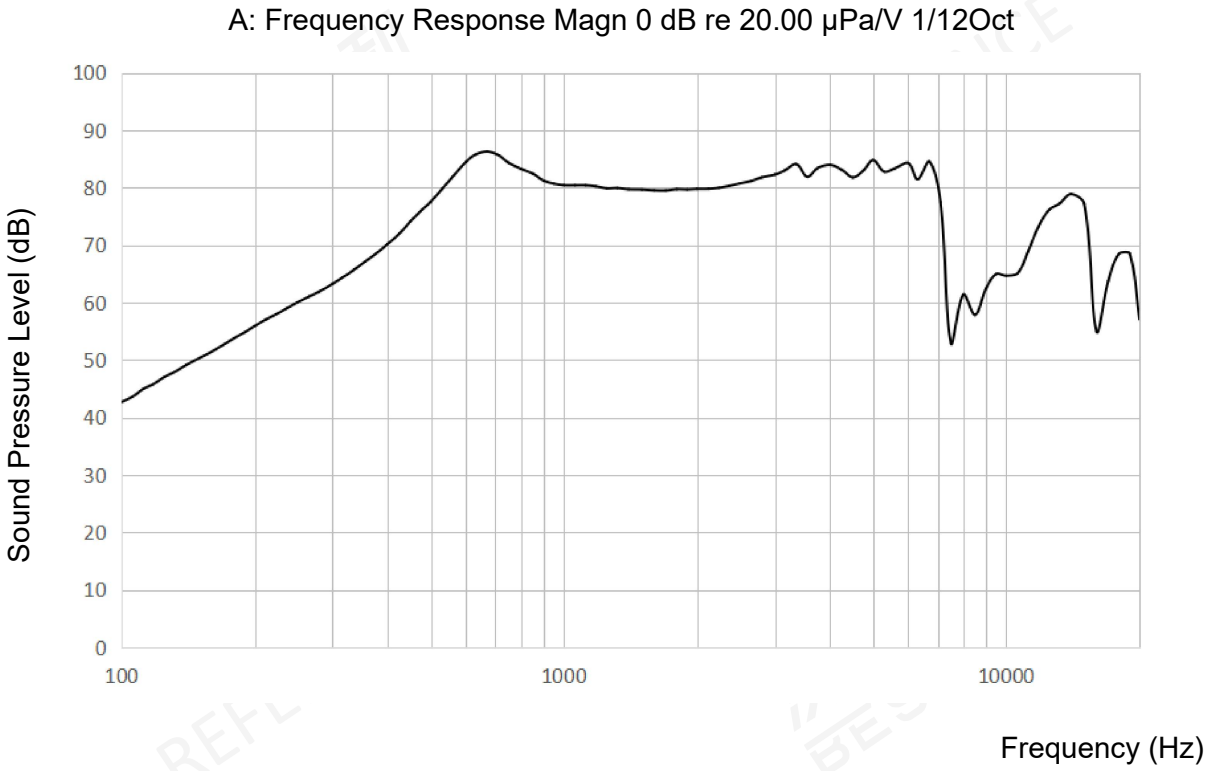

1.3.1 Sensitivity

SPL is expressed in dB rel 20 µPa,computed according to IEC 268-5.
Measurement set up according chapter 1.2 and parameters according chapter 1.3.

Downloaded from Arrow.com.

1.4 F0 Curve (only for reference)

A: Frequency Response Magn 0 dB re 20.00 μPa/V 1/12Oct

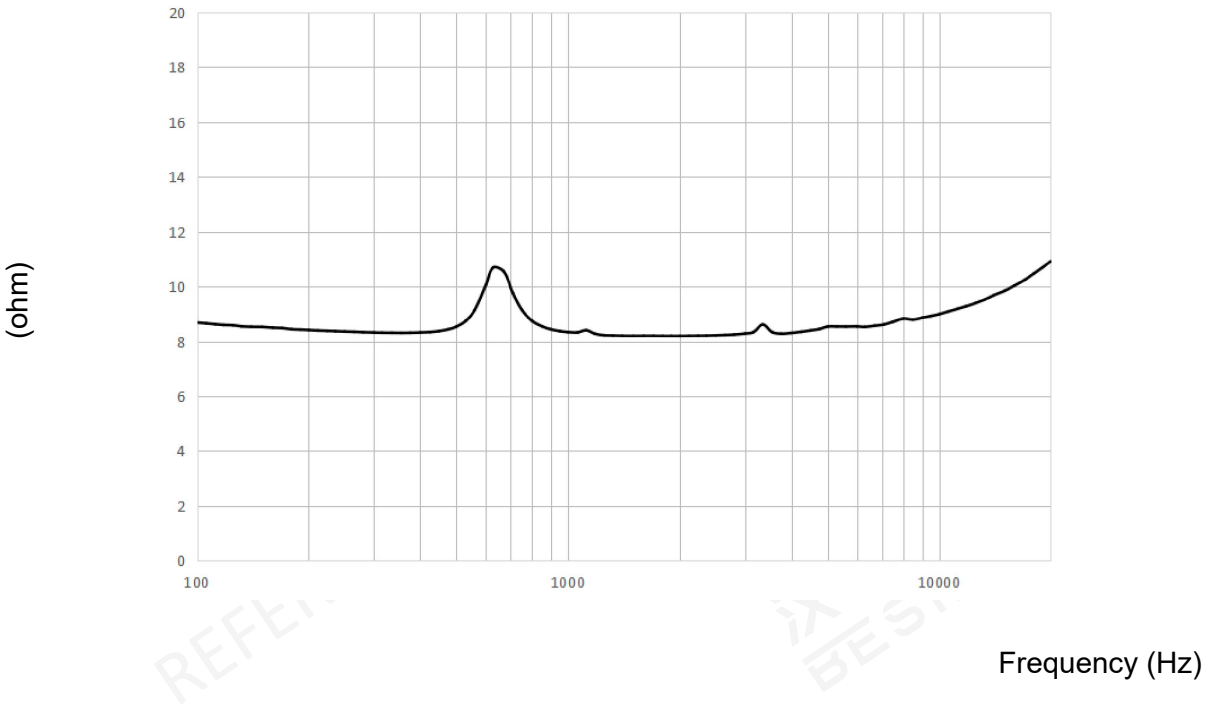

1.4.1 Resonance Frequency

Resonance frequency is measured according test set up in chapter 1.2 and parameters according chapter 1.4

Downloaded from Arrow.com.

2.Part List

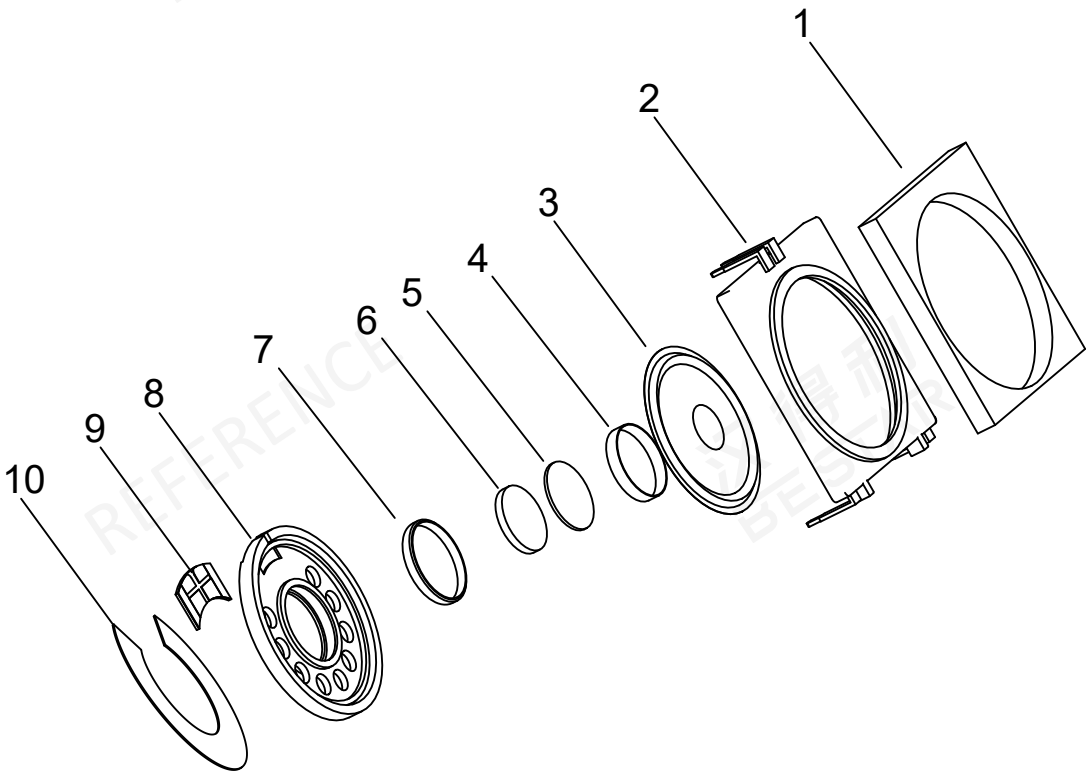

10. Dustproof Sheet	Black non-woven
9. PCB	Ethoxyline+cu
8. Frame	PBT+15GF
7. Magnet bowl	SPCC
6. Magnet	NdFeB
5. Up Plate	SPCC
4. Voice coil	Cu
3. Membrane	PEI
2. Shell frame	PBT+15GF
1. Rubber pad	EPDM

Downloaded from Arrow.com.

3. Dimension

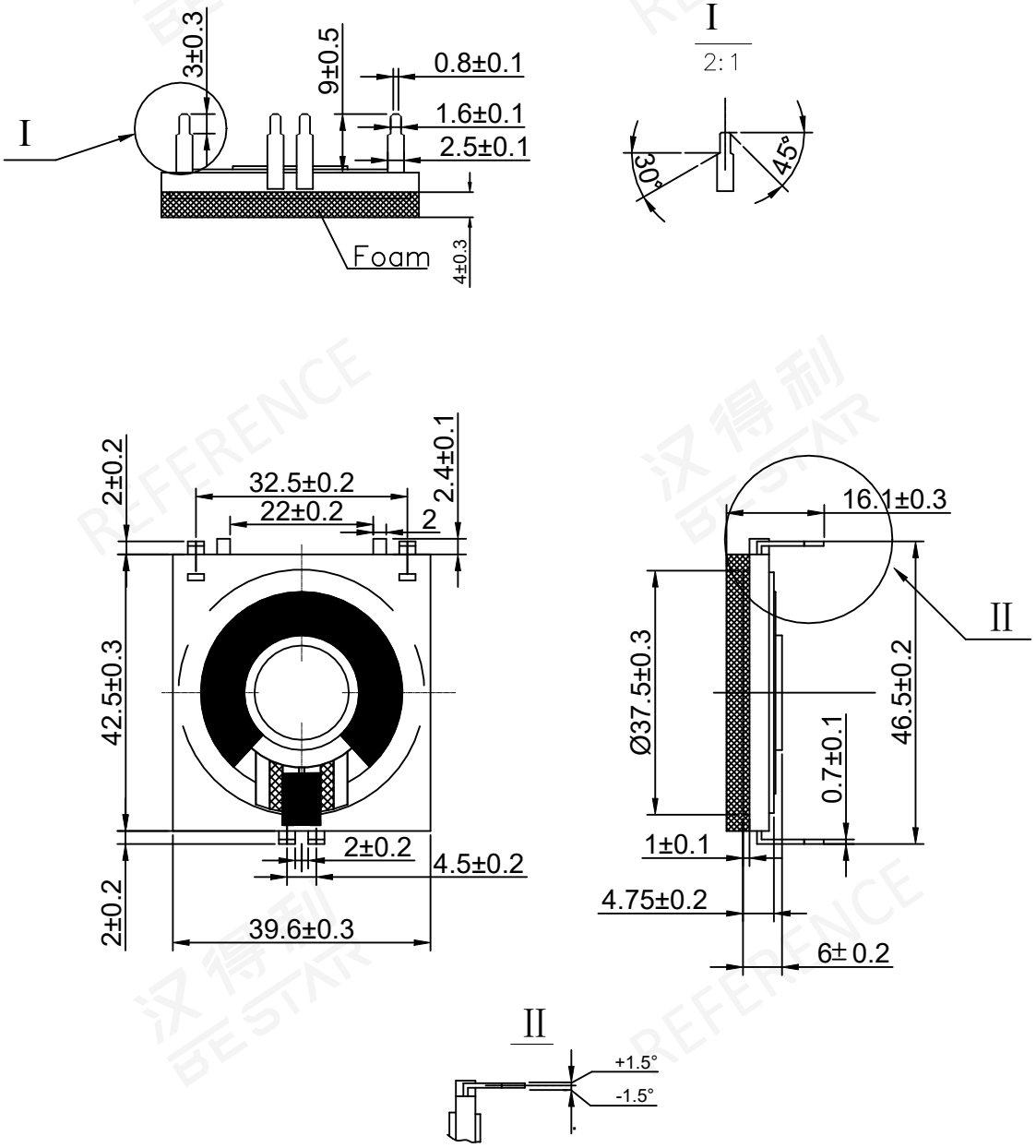

Tolerance:±0.2mm

Downloaded from Arrow.com.

4. Reliability test

4.1 Ordinary temp life

Room temperature sine wave 300-3500Hz (2.83Vrms) input 96 hours frequency scanning speed 1.5s.At the end of the experiment, the product was placed at room temperature for 2 hours, and then the abnormal sound frequency sweep and acoustic parameters were tested. Sinusoidal wave 2.83Vrms sweeps without abnormal sound, F0 should meet the original specification requirements, and the output sound pressure variation is within ±3dB.

4.2 Max input test

At room temperature, the frequency band 300-3500Hz was set, and the sine wave signal of 2W(4.0Vrms) was input into the product, and the frequency was swept according to 30S/ on-30s/off for 60 cycles. After the experiment, the sinusoidal wave swept 2.83Vrm without abnormal sound.

4.3 High temp life

Under the condition of high temperature +90℃, the frequency band 300-3500Hz was set, and the sinusoidal wave signal of 1W(2.83Vrms) was input into the product for frequency scanning test. The frequency scanning speed was 1.5 seconds for 96 hours continuously. At the end of the experiment, the product was placed at room temperature for 2 hours, and then the abnormal sound frequency sweep and acoustic parameters were tested. Sinusoidal wave 2.83Vrms sweeps without abnormal sound, F0 should meet the original specifications, and the output sound pressure variation is within ±6dB.

4.4 Low temp life

Under the condition of low temperature -40℃, the frequency band 300-3500Hz was set, and the sinusoidal wave signal of 1W(2.83Vrms) was input into the product for frequency scanning test. The frequency scanning speed was 1.5 seconds for 96 hours continuously. At the end of the experiment, the product was placed at room temperature for 2 hours, and then the abnormal sound frequency sweep and acoustic parameters were tested. Sinusoidal wave 2.83Vrms sweeps without abnormal sound, F0 should meet the original specifications, and the output sound pressure variation is within ±6dB.

4.5 Constant temp and humidity load test

Under the condition of constant temperature +40±2℃ relative humidity of 90%-95%RH, the frequency band was set, and the sinusoidal wave signal of 1W(2.83Vrms) was input into the product for frequency sweep at a frequency speed of 1.5 seconds for 48 hours continuously. At the end of the experiment, the product was placed at room temperature for 2 hours, and then the abnormal sound frequency sweep and acoustic parameters were tested. Sinusoidal wave 2.83Vrms sweeps without abnormal sound, F0 should meet the original specifications, and the output sound pressure variation is within ±6dB.

Downloaded from Arrow.com.

4.6 Thermal shock test

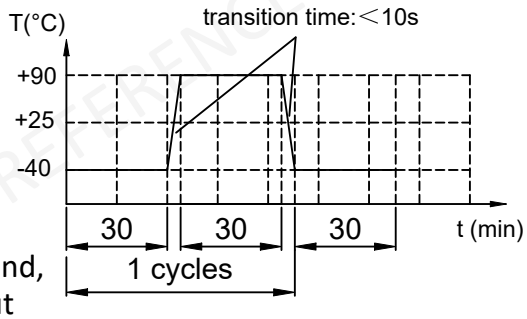

The product is subjected to 100 times of temperature cycling impact, and the cycling content is as shown in the figure. After the end of the experiment, the product is placed at room temperature for 2 hours, and then abnormal sound frequency sweep and acoustic parameters are tested. Sinusoidal wave 2.83Vrms sweeps without abnormal sound, F0 should meet the original specifications, and the output sound pressure variation is within ±6dB.

4.7 Drop test

Free fall on concrete 120 cm high once every 3 surfaces for a total of 20 times. After the test, there is no separation, deformation, clearance or cracking in part of the product. The sinusoid wave sweeps 2.83Vrms without abnormal sound.

4.8 Wave soldering

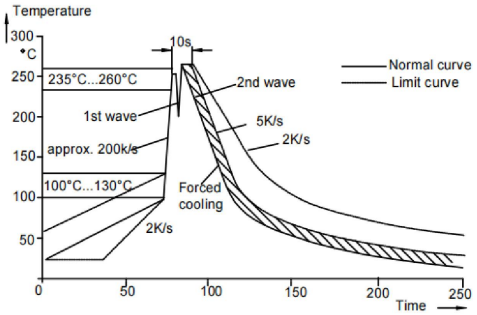

4.9 Vibration Test

Vibration Frequency 10~55Hz,Amplitude 1.52mm.Duration 2hrs each of 3 axis.

Downloaded from Arrow.com.

5. Packing

5.1 Packing drawing (unit:mm)

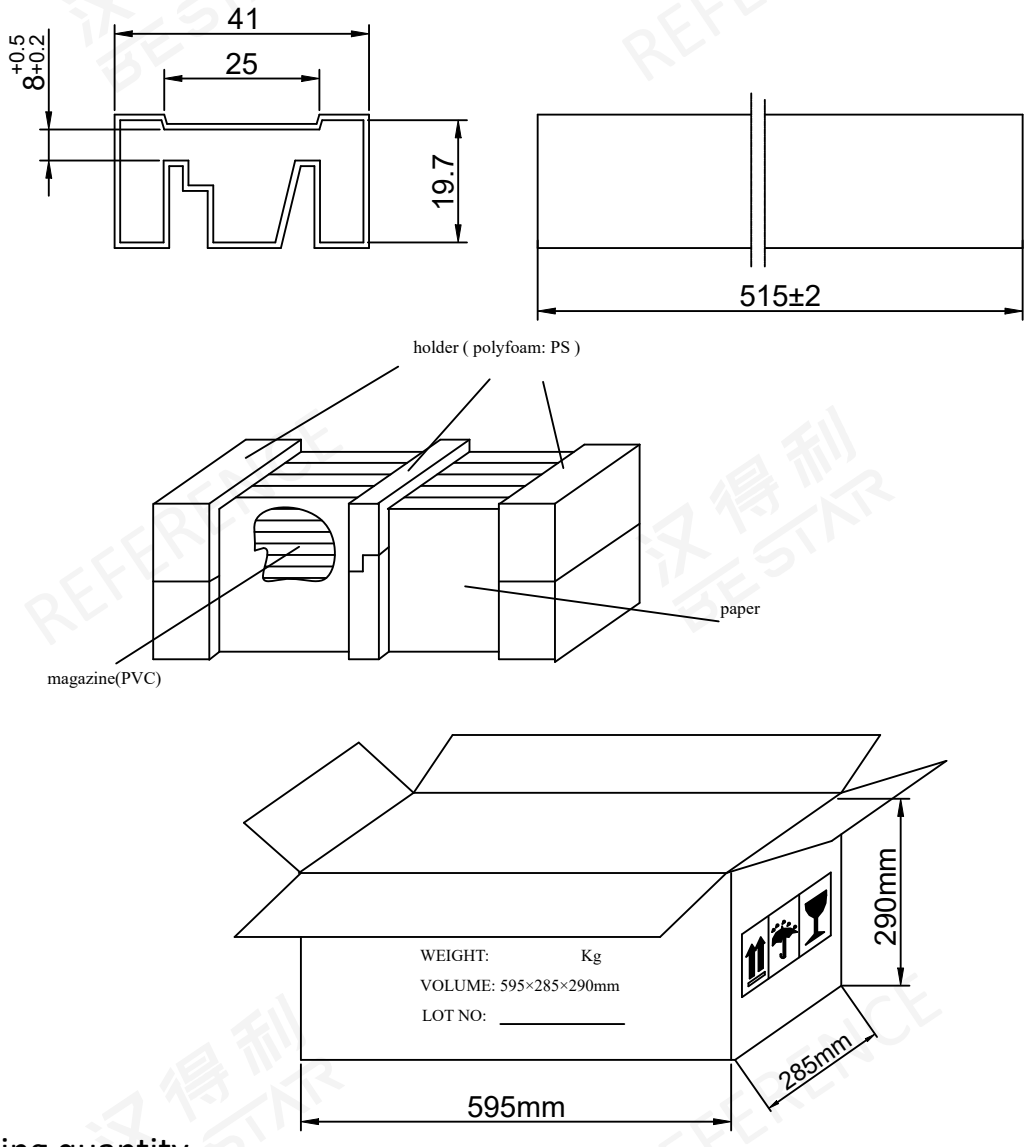

5.2 Packing quantity

1) 11 pcs/magazine
2) 50 magazine/carton
3) 550 pcs/carton in total
4) carton size 595X285X290mm

Downloaded from Arrow.com.

6. History change record

Version	Change Items	Date	Drawn	Checked	Approved
A0	First version	2025.03.28	Judy.Yang	Grubby.Gao	Jason.Zhang

REFERENCE 汉得利 BESTAR

Downloaded from Arrow.com.

7.Important Notice

7.1 The products mustn't be washed

7.2 Store Condition (packaging)

The products should be stored in the room ,where the temperature/humidity is stable. And avoid such places where there are large temperature changes. Please store the products at the following conditions:

Temperature: -40 to + 95 ℃ Humidity: 15 to 85% R.H.

7.3 Expire Date on Storage

Expire date (Shelf life) of the products is six months after delivered under the conditions of a sealed and an unopened package. Please use the products within six months after delivered.

If you store the products for a long time (more than six months), use carefully because the products may be degraded in the solderability and/or rusty.Please confirm solderability and characteristics for the products regularly.

7.4 Notice on Product Storage

(1) Please do not store the products in a chemical atmosphere (Acids, Alkali, Bases, Organic gas, Sulfides and so on), because the characteristics may be reduced at quality, and/or be degraded in the solderability due to the storage in a chemical atmosphere.

(2) Please use the products immediately after the package is opened, because the characteristics may be reduced at quality, and/or be degraded in the solderability due to storage under the poor condition.

7.5 Rated and Max input power

Rated input power

Rated input power is the maximum (limit) value which can be input to the component intentionally. If the actual input power to component keeps exceeding Rated Input power, it will damage the component acoustic performances and reliability. In the worst case, the component will get broken and no sound.

Max input power

Max input power is the maximum (limit) value for unexpected input power which is caused in the customer's circuit like surge voltage. If the actual input power to component keeps exceeding Maximum input power, it will break the component and cause no sound in a short time. Please note that component will have a risk to get broken if the unexpected input power continues.

The value of input power is set based on the sinusoidal power in the normal speaker use. If the special signal is input to component, the values of Rated and Max input power will be different. Please make a well-investigation at your laboratory in the case of the special signal input.

Downloaded from Arrow.com.