1586377-1 Product Details

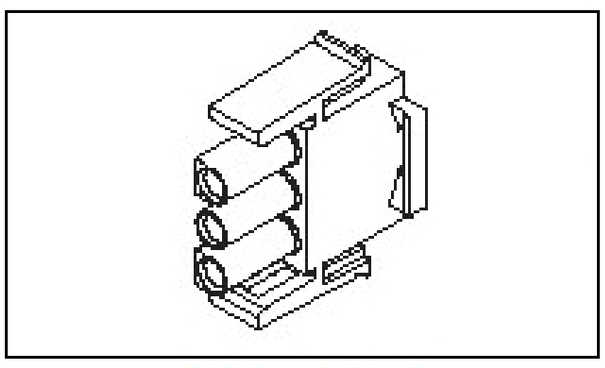

1586377-1

TE Internal Number: 1586377-1

Active

.250" Centerline, 600 V, 19 - 36 A max

Always EU RoHS/ELV Compliant (Statement of Compliance)

Product Highlights:

- Universal MATE-N-LOK Product Line
- Wire-to-Wire
- Applies To Wire/Cable
- Connector
- Housing

View all Features

Add to My Part List | Request Sample | Find Similar Products | Buy Product

Quick Links

- Pricing & Availability
- Search for Tooling
- Product Feature Selector
- Contact Us About This Product

Documentation & Additional Information

Product Drawings:
- None Available

Catalog Pages/Data Sheets:
- None Available

Product Specifications:
- None Available

Application Specifications:
- None Available

Instruction Sheets:
- None Available

CAD Files:
- None Available

Additional Information:
- Product Line Information

Related Products:
- Tooling

Feedback

Product Features (Please use the Product Drawing for all design activity)

Product Type Features:
- Product Line = Universal MATE-N-LOK
- Product Type = Connector
- Connector Type = Housing
- Sealed = No

Mechanical Attachment:
- Contact Retention = Without
- Mating Retention Type = Latch(ing)

Electrical Characteristics:
- Operating Voltage Reference = AC
- Operating Voltage (VAC) = 600

Body Features:
- Mating Retention = With
- Assembly Integration Feature = Without

Contact Features:
- Contact Type = Pin or Socket
- Contact Layout = In-Line
- Multiple Contact Types = Without

Housing Features:
- Connector Style = Plug
- Centerline (mm [in]) = 6.35 [0.2499]
- Housing Material = Nylon - GF
- Housing Color = Black
- Mating Alignment = With
- Mating Alignment Type = Polarization

Configuration Features:
- Number of Positions = 3
- Number of Rows = 1

Industry Standards:
- Agency/Standard = UL
- UL Flammability Rating = UL 94V-2
- RoHS/ELV Compliance = RoHS compliant, ELV compliant
- Lead Free Solder Processes = Not relevant for lead free process
- RoHS/ELV Compliance History = Always was RoHS compliant
- VDE Tested = Yes
- UL Rating = Recognized
- UL File Number = E28476

Environmental:
- Operating Temperature (°C [°F]) = -55 – +125 [-67 – +257]

Conditions for Usage:
- Applies To = Wire/Cable
- Glow Wire Rating = Standard Part - Not Glow Wire
- For Use With = Appropriate Universal MATE-N-LOK Receptacle

Operation/Application:
- Application Use = Wire-to-Wire

Packaging Features:
- Packaging Method = Bag
- Packaging Quantity = 100

Other:
- Brand = TE Connectivity

© 2014 TE Connectivity Ltd. family of companies. All Rights Reserved

Downloaded from Arrow.com.