Important notice on ams-OSRAM documents

As part of the acquisition of the non-optical analog/mixed-signal sensor portfolio from ams-OSRAM by Infineon, Infineon is in the process of rebranding all relevant documents.
Due to the large volume of documents, this process will be completed in phases. In the interim, we are providing access to legacy ams-OSRAM documents under the terms of a trademark license agreement.

The attached document is a legacy ams-OSRAM document and has not been rebranded to reflect the acquisition by Infineon.

Please note that:

Infineon Technologies AG is the owner and provider of the document and the products/services described therein, effective from 1 July 2026, the date of “closing”.

All terms and conditions, including but not limited to warranties, liabilities, and intellectual property rights, are now governed by Infineon's policies and agreements.

All products described in these documents retain their original qualifications and certifications. Infineon confirms that no changes will be made to the products that would affect their compliance with relevant standards, regulations, or certifications.

Contact:

Infineon Technologies AG
Am Campeon 1-15
85579 Neubiberg
Germany

© 2026 Infineon Technologies AG
All Rights Reserved.
Email: erratum@infineon.com

Downloaded from Arrow.com.

Product Document

Published by
ams OSRAM Group

Downloaded from Arrow.com.

AS5147P

14-Bit On-Axis Magnetic Rotary Position Sensor with 12-Bit Binary Incremental Pulse Count and for 28krpm High Speed Capability

General Description

The AS5147P is a high-resolution rotary position sensor for high speed (up to 28krpm) angle measurement over a full 360 degree range. This new position sensor is equipped with a revolutionary integrated dynamic angle error compensation (DAEC™) with almost 0 latency.

The robust design of the device suppresses the influence of any homogenous external stray magnetic field. A standard 4-wire SPI serial interface allows a host microcontroller to read 14-bit absolute angle position data from the AS5147P and to program non-volatile settings without a dedicated programmer. Incremental movements are indicated on a set of ABI signals with a maximum resolution of 4096 steps / 1024 pulses per revolution. The resolution of ABI signal is programmable to 4096 steps / 1024 pulses per revolution, 2048steps / 512 pulses per revolution or 1024steps / 256 pulses per revolution. Brushless DC (BLDC) motors are controlled through a standard UVW commutation interface with a programmable number of pole pairs from 1 to 7. The absolute angle position is also provided as PWM-encoded output signal.

The AS5147P supports embedded self-diagnostics including magnetic field strength too high, magnetic field strength too low or lost magnet, and other related diagnostic features.

The product is defined as SEooC (Safety Element out of Context) according ISO26262 including FMEDA, safety manual and third party qualification.

The AS5147P is available as a single die in a compact 14-pin TSSOP package.

Ordering Information and Content Guide appear at end of datasheet.

Downloaded from Arrow.com.

Key Benefits & Features

The benefits and features of AS5147P, 14-Bit On-Axis Magnetic Rotary Position Sensor with 12-Bit Binary Incremental Pulse Count and for 28krpm High Speed Capability are listed below:

Figure 1:
Added Value of Using the AS5147P

Benefits	Features
• High speed application	• Up to 28krpm
• Easy to use – saving costs on DSP	• DAEC™ Dynamic angle error compensation
• Good resolution for motor and position control	• 14-bit core resolution
• Versatile choice of the interface	• Independent output interfaces: SPI, ABI, UVW, PWM
• No programmer needed (via SPI command)	• Zero position, configuration programmable
• Supports safety challenging applications	• Self-Diagnostics
• Lower system costs (no shielding)	• Immune to external stray field

Applications

The AS5147P has been designed to support BLDC motor commutation for the most challenging automotive applications (AEC-Q100 grade 0 automotive qualified) such as electric power steering (EPS), transmission (gearbox, actuator), pump, brake (actuator) and starter and alternator.

Downloaded from Arrow.com.

Block Diagram

The functional blocks of this device are shown below:

Figure 2:
AS5147P Block Diagram

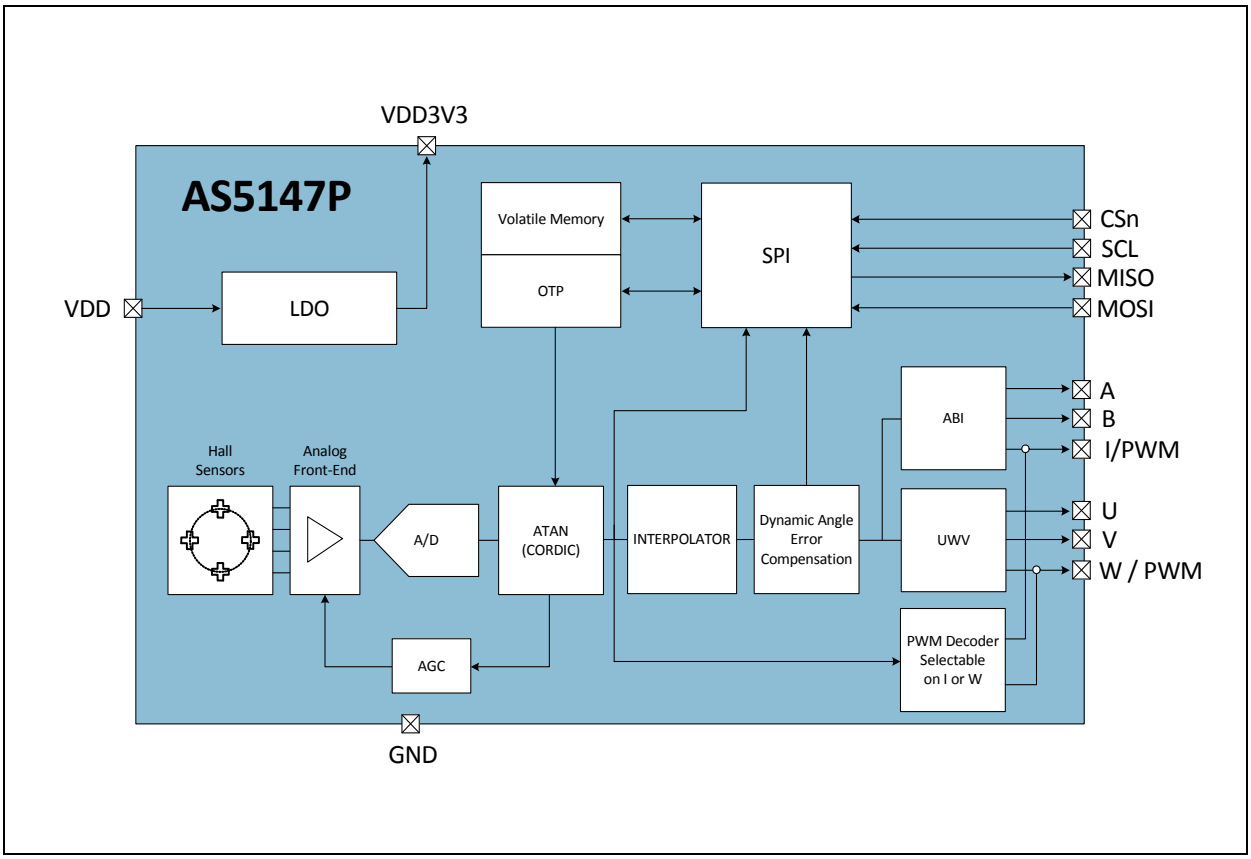

Downloaded from Arrow.com.

Pin Assignment

Figure 3:
TSSOP-14 Pin Assignment

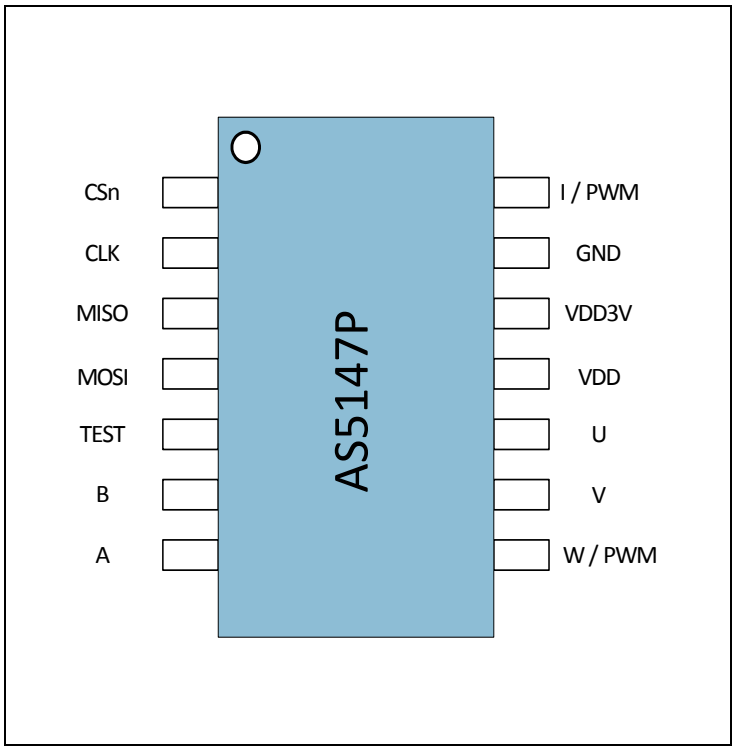

Figure 4:
Pin Description

Pin Number	Pin Name	Pin Type	Description
1	CSn	Digital input	SPI chip select (active low)
2	CLK	Digital input	SPI clock
3	MISO	Digital output	SPI master data input, slave output
4	MOSI	Digital input	SPI master data output, slave input
5	Test		Test pin (connect to ground)
6	B	Digital output	Incremental signal B
7	A	Digital output	Incremental signal A

Downloaded from Arrow.com.

Pin Number	Pin Name	Pin Type	Description
8	W/PWM	Digital output	Commutation signal W or PWM-encoded output
9	V	Digital output	Commutation signal V
10	U	Digital output	Commutation signal U
11	VDD	Power supply	5V power supply voltage for on-chip regulator
12	VDD3V3	Power supply	3.3V on-chip low-dropout (LDO) output. Requires an external decoupling capacitor (1µF)
13	GND	Power supply	Ground
14	I	Digital output	Incremental signal I (index) or PWM

Note(s):

1. Floating state of a digital input is not allowed.
2. If SPI is not used, a Pull up resistor on CSn is required.
3. If SPI is not used, a Pull down resistor on CLK and MOSI is required.
4. If SPI is not used, the pin MISO can be left open.
5. If ABI, UVW or PWM is not used, the pins can be left open.

Downloaded from Arrow.com.

Absolute Maximum Ratings

Stresses beyond those listed parameters under Absolute Maximum Ratings may cause permanent damage to the device. These are stress ratings only. Exposure to absolute maximum rating conditions for extended periods may affect device reliability. Parameters regarding normal operation of the sensor are listed in section Electrical Characteristics.

Figure 5:
Absolute Maximum Ratings

Symbol	Parameter	Min	Max	Units	Note
VDD5	DC supply voltage at VDD pin	-0.3	7.0	V	
VDD3	DC supply voltage at VDD3V3 pin	-0.3	5.0	V	
V_{SS}	DC supply voltage at GND pin	-0.3	0.3	V	
V_{in}	Input pin voltage		VDD+0.3	V	
I_{scr}	Input current (latch-up immunity)	-100	100	mA	AEC-Q100-004
ESD	Electrostatic discharge	±2		kV	AEC-Q100-002
P_t	Total power dissipation (all supplies and outputs)		150	mW	
Ta5V0	Ambient temperature 5V0	-40	150	°C	In the 5.0V power supply mode only
Ta3V3	Ambient temperature 3V3	-40	125	°C	In the 3.3V power supply mode if NOISESET = 0
TaProg	Programming temperature	5	45	°C	Programming @ room temperature (25°C ± 20°C)
T_{strg}	Storage temperature	-55	150	°C	
T_{body}	Package body temperature		260	°C	IPC/JEDEC J-STD-020
RH_{NC}	Relative humidity non-condensing	5	85	%	
MSL	Moisture sensitivity level	3			Represents a maximum floor lifetime of 168h

Downloaded from Arrow.com.

Electrical Characteristics

All limits are guaranteed. The parameters with min and max values are guaranteed with production tests or SQC (Statistical Quality Control) methods.

Figure 6:
Electrical Characteristics

Symbol	Parameter	Conditions	Min	Typ	Max	Units
VDD	Positive supply voltage	5.0V operation mode	4.5	5.0	5.5	V
VDD3V3	Positive supply voltage	3.3V operation mode; only from -40 to 125°C	3.0	3.3	3.6	V
VDD3V3_150	Positive supply voltage	3.3V operation mode; only from -40 to 150°C (3V150°C Bit has to be set)	3.0	3.3	3.6	V
VDD_Burn	Positive supply voltage	Supply voltage required for programming in 3.3V operation	3.3		3.5	V
V_{REG}	Regulated voltage	Voltage at VDD3V3 pin if VDD ≠ VDD3V3	3.2	3.4	3.6	V
I_{DD}	Supply current				15	mA
V_{IH}	High-level input voltage		0.7 × VDD			V
V_{IL}	Low-level input voltage				0.3 × VDD	V
V_{OH}	High-level output voltage		VDD - 0.5			V
V_{OL}	Low-level output voltage				V_{SS} + 0.4	V
I_Out	Current on digital output (ABI, UVW)				1	mA
I_Out_MISO	Current on digital output MISO				4	mA
C_L	Capacitive load on digital output				50	pf

Downloaded from Arrow.com.

Magnetic Characteristics

Figure 7:
Magnetic Specifications

Symbol	Parameter	Conditions	Min	Max	Unit
Bz	Orthogonal magnetic field strength, normal operating mode	Required orthogonal component of the magnetic field strength measured at the die's surface along a circle of 1.1mm	35	70	mT

Note(s):

1. it is possible to operate the AS5147P below 35mT with reduced noise performance.

System Characteristics

Figure 8:
System Specifications

Symbol	Parameter	Conditions	Min	Typ	Max	Units
RES	Core resolution			14		bit
RES_ABI	Resolution of the ABI interface	Programmable with register setting (ABIRES)	10		12	bit
INL_{OPT} @ 25°C	Non-linearity, optimum placement of the magnet				±0.8	degree
$INL_{OPT+TEMP}$	Non-linearity optimum placement of the magnet over the full Temperature Range				±1	degree
$INL_{DIS+TEMP}$	Non-linearity @ displacement of magnet and temperature -40°C to 150°C	Assuming N35H Magnet (D=8mm, H=3mm) 500µm displacement in x and y z-distance @ 2000µm			±1.2	degree
ONL	RMS output noise (1 sigma). Not tested, guaranteed by design.	Orthogonal component for the magnetic field within the specified range (Bz), NOISESET = 0			0.068	degree
ONH	RMS output noise (1 sigma) on SPI, ABI and UVW interfaces. Not tested, guaranteed by design.	Orthogonal component for the magnetic field within the specified range (Bz), NOISESET = 1			0.082	degree

Downloaded from Arrow.com.

Symbol	Parameter	Conditions	Min	Typ	Max	Units
ON_PWM	RMS output noise (1 sigma) on PWM interface	Orthogonal component for the magnetic field within the specified range (Bz)			0.068	degree
t_{delay}	System propagation delay –core	Reading angle via SPI	90		110	µs
t_{delay_DAEC}	Residual system propagation delay after dynamic angle error correction.	At ABI, UVW and SPI	1.5		1.9	µs
t_{sampl}	Sampling rate	Refresh rate at SPI	202	222	247	ns
DAE_{1700}	Dynamic angle error	At 1700 RPM constant speed			0.02	degree
DAE_{max}	Dynamic angle error	At 28000 RPM constant speed			0.36	degree
DAE_{acc}	Dynamic angle error at constant acceleration (25krad/s^2)	25k radians/s^2 constant acceleration			0.175	degree
MS	Maximum speed				28000	RPM

Reference magnet: N35H, 8mm diameter; 3mm thickness

Timing Characteristics

Figure 9:
Timing Specifications

Symbol	Parameter	Conditions	Min	Typ	Max	Units
t_{pon}	Power-on time	Not tested, guaranteed by design. Time between VDD > VDDMIN and the first valid outcome			10	ms

Downloaded from Arrow.com.

Detailed Description

The AS5147P is a Hall-effect magnetic sensor using a CMOS technology. The Hall sensors convert the magnetic field component perpendicular to the surface of the chip into a voltage.

The signals from the Hall sensors are amplified and filtered by the analog front-end (AFE) before being converted by the analog-to-digital converter (ADC). The output of the ADC is processed by the hardwired CORDIC (coordinate rotation digital computer) block to compute the angle and magnitude of the magnetic vector. The intensity of the magnetic field (magnitude) is used by the automatic gain control (AGC) to adjust the amplification level for compensation of the temperature and magnetic field variations.

The AS5147P generates continuously the angle information, which can be requested by the different interfaces of the device. The internal 14-bit resolution is available by readout register via the SPI interface. The resolution on the ABI output can be programmed for 10, 11 or 12 bits.

The Dynamic Angle Error Compensation block corrects the calculated angle regarding latency, by using a linear prediction calculation algorithm. At constant rotation speed the latency time is internally compensated by the AS5147P, reducing the dynamic angle error at the SPI, ABI and UVW outputs. The AS5147P allows selecting between a UVW output interface and a PWM-encoded interface on the W pin.

At higher speeds, the interpolator fills in missing ABI pulses and generates the UVW signals with no loss of resolution. The non-volatile settings in the AS5147P can be programmed through the SPI interface without any dedicated programmer. The AS5147P can support high speed application up to 28krpm.

Downloaded from Arrow.com.

Power Management

The AS5147P can be either powered from a 5.0V supply using the on-chip low-dropout regulator or from a 3.3V voltage supply. The LDO regulator is not intended to power any other loads, and it needs a 1 µF capacitor to ground located close to the chip for decoupling as shown in Figure 11.

In 3.3V operation, VDD and VREG must be tied together. In this configuration, normal noise performance (ONL) is available at reduced maximum temperature (125°C) by clearing NOISESET to 0. When NOISESET is set to 1, the full temperature range is available with reduced noise performance (ONH).

Figure 10:
Temperature Range and Output Noise in 3.3V and 5.0V Mode

VDD (V)	NOISESET	Temperature Range (°C)	RMS Output Noise (degree)
5.0	0	-40 to 150	0.068
3.3	0	-40 to 125	0.068
3.3	1	-40 to 150	0.082

Figure 11:
5.0V and 3.3V Power Supply Options

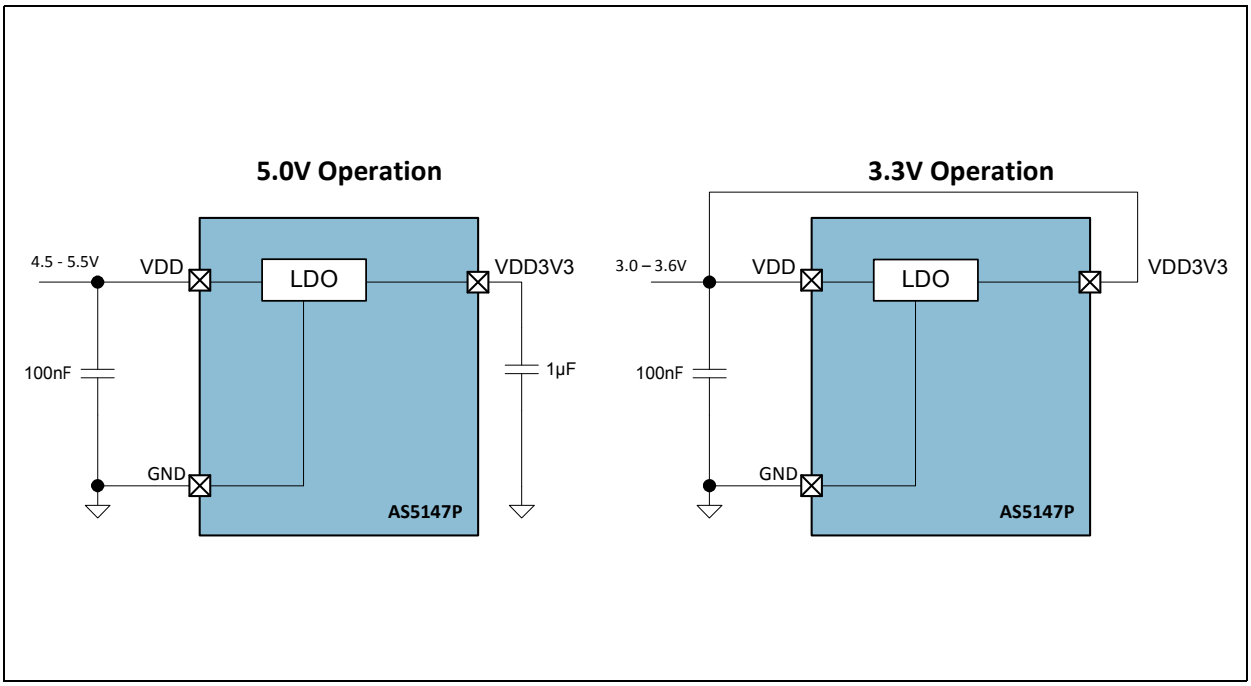

After applying power to the chip, the power-on time (t_{pon}) must elapse before the AS5147P provides the first valid data.

Downloaded from Arrow.com.

Dynamic Angle Error Compensation

The AS5147P uses 4 integrated Hall sensors which produce a voltage proportional to the orthogonal component of the magnetic field to the die. These voltage signals are amplified, filtered, and converted into the digital domain to allow the CORDIC digital block to calculate the angle of the magnetic vector. The propagation of these signals through the analog front-end and digital back-end generates a fixed delay between the time of measurement and the availability of the measured angle at the outputs. This latency generates a dynamic angle error represented by the product of the angular speed (ω)and the system propagation delay (t_{delay}):

(EQ1) $$DAE = \omega \times t_{delay}$$

The dynamic angle compensation block calculates the current magnet rotation speed (ω) and multiplies it with the system propagation delay (t_{delay}) to determine the correction angle to reduce this error. At constant speed, the residual system propagation delay is t_{delay_DAEC}.

The angle represented on the PWM interface is not compensated by the Dynamic Angle Error Compensation algorithm. It is also possible to disable the Dynamic Angle Error Compensation with the DAECDIS setting. Disabling the Dynamic Angle Error Compensation gives a noise benefit of 0.016 degree rms.This setting can be advantageous for low speed (under 100 RPM) respectively static positioning applications.

Downloaded from Arrow.com.

SPI Interface (Slave)

The SPI interface is used by a host microcontroller (master) to read or write the volatile memory as well as to program the non-volatile OTP registers. The AS5147P SPI only supports slave operation mode. It communicates at clock rates up to 10 MHz.

The AS5147P SPI uses mode=1 (CPOL=0, CPHA=1) to exchange data. As shown in Figure 12, a data transfer starts with the falling edge of CSn (SCL is low). The AS5147P samples MOSI data on the falling edge of SCL. SPI commands are executed at the end of the frame (rising edge of CSn). The bit order is MSB first. Data is protected by parity.

SPI Timing

The AS5147P SPI timing is shown in Figure 12.

Figure 12:
SPI Timing Diagram

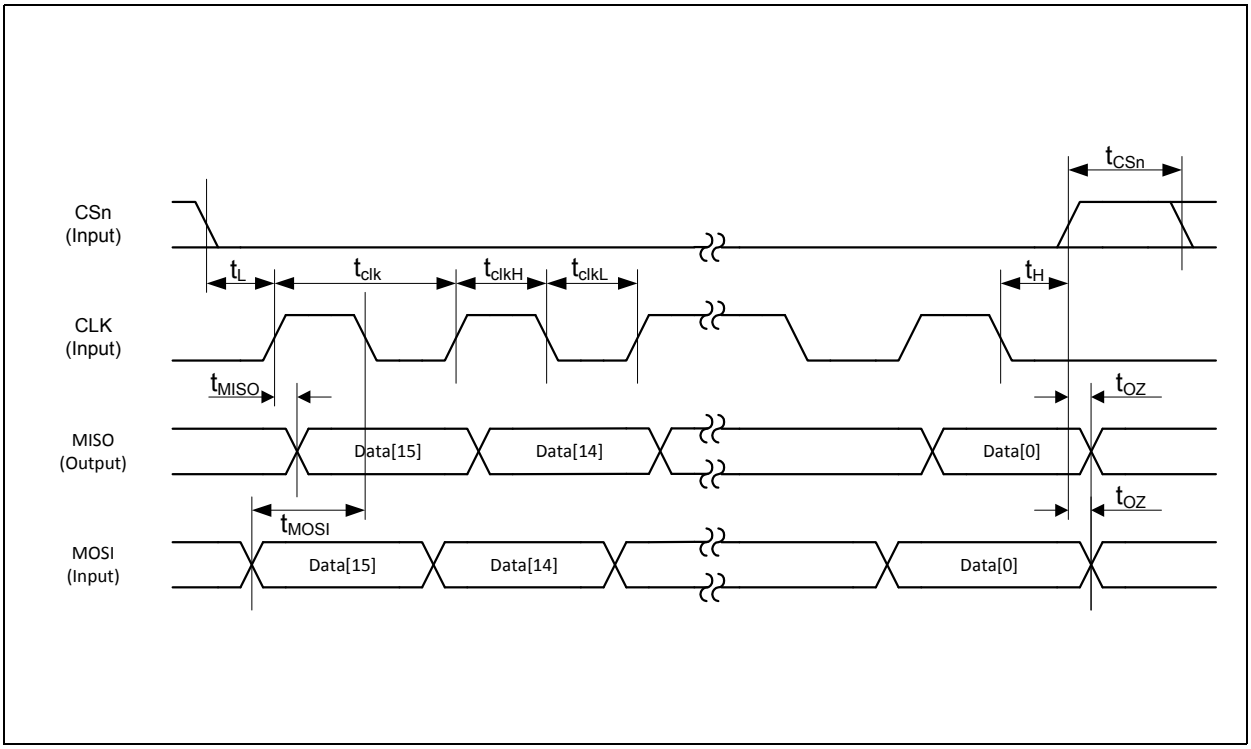

Downloaded from Arrow.com.

Figure 13:
SPI Timing

Parameter	Description	Min	Max	Units
t_L	Time between CSn falling edge and CLK rising edge	350		ns
t_{clk}	Serial clock period	100		ns
t_{clkL}	Low period of serial clock	50		ns
t_{clkH}	High period of serial clock	50		ns
t_H	Time between last falling edge of CLK and rising edge of CSn	tclk/2		ns
t_{CSn}	High time of CSn between two transmissions	350		ns
t_{MOSI}	Data input valid to falling clock edge	20		ns
t_{MISO}	CLK edge to data output valid		51	ns
t_{OZ}	Release bus time after CS rising edge.		10	ns

SPI Transaction

An SPI transaction consists of a 16-bit command frame followed by a 16-bit data frame. Figure 14 shows the structure of the command frame.

Figure 14:
SPI Command Frame

Bit	Name	Description
15	PARC	Parity bit (even) calculated on the lower 15 bits of command frame
14	R/W	0: Write 1: Read
13:0	ADDR	Address to read or write

To increase the reliability of communication over the SPI, an even parity bit (PARC) must be generated and sent. A wrong setting of the parity bit causes an parity bit error which is shown the PARERR bit in the error flag register.

The parity bit is calculated from the lower 15 bits of the command frame. The 16-bit command consists of a register address and read/write bit which indicates if the transaction is a read or write and the parity bit. Figure 15 shows the read data frame.

Downloaded from Arrow.com.

Figure 15:
SPI Read Data Frame

Bit	Name	Description
15	PARD	Parity bit (even) calculated on the lower 15 bits of the read data frame
14	EF	0: No command frame error command occurred 1: Error occurred
13:0	DATA	Data

The data is sent on the MISO pin. The parity bit PARD is calculated by the AS5047D of the lower 15 bits of data frame. If an error is detected in the previous SPI command frame, the EF bit is set high. The SPI read is sampled on the rising edge of CSn and the data is transmitted on MISO with the next read command, as shown in Figure 16.

Figure 16:
SPI Read

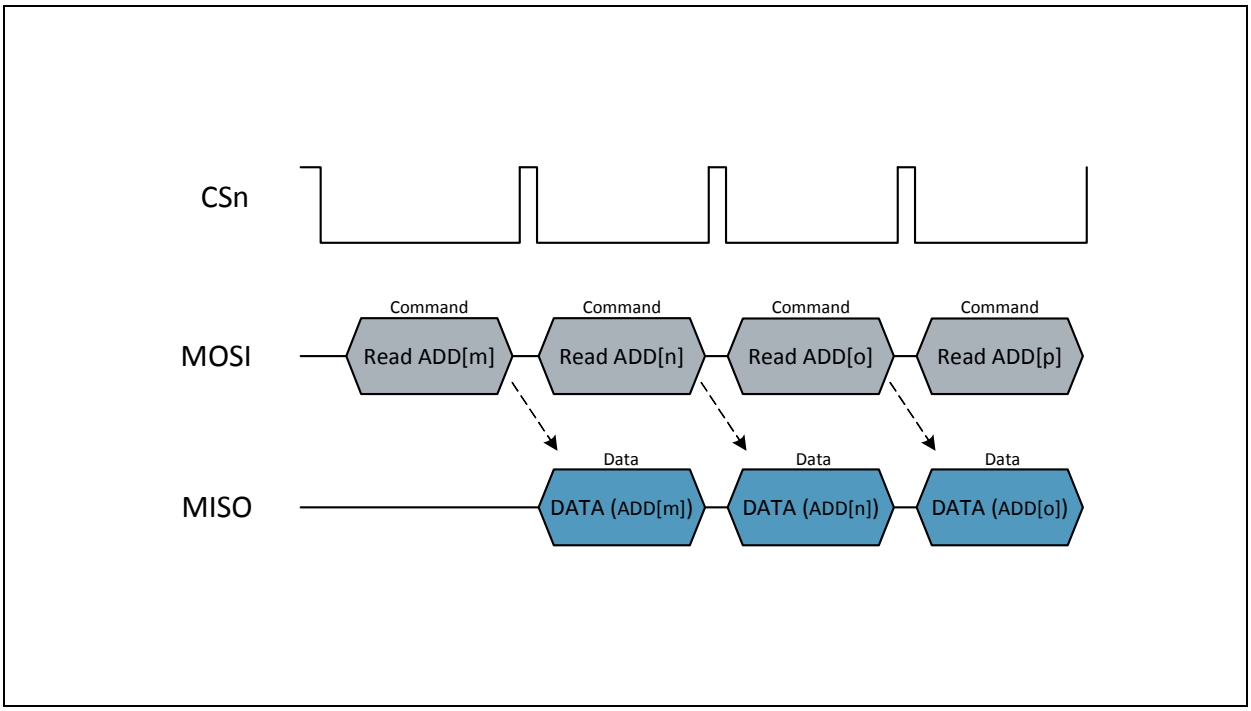

Downloaded from Arrow.com.

Figure 17:
SPI Write Data Frame

Bit	Name	Description
15	PARD	Parity bit (even)
14	0	Always low
13:0	DATA	Data

The parity bit PARD must be calculated from the lower 15 bit of write data frame.

In an SPI write transaction, the write command frame is followed by a write data frame at MOSI. The write data frame consists of the new content of register which address is in the command frame.

During the new content is transmitted on MOSI by the write data frame, the old content is send on MISO. At the next command on MOSI the actual content of the register is transmitted on MISO, as shown in Figure 18.

Figure 18:
SPI Write Transaction

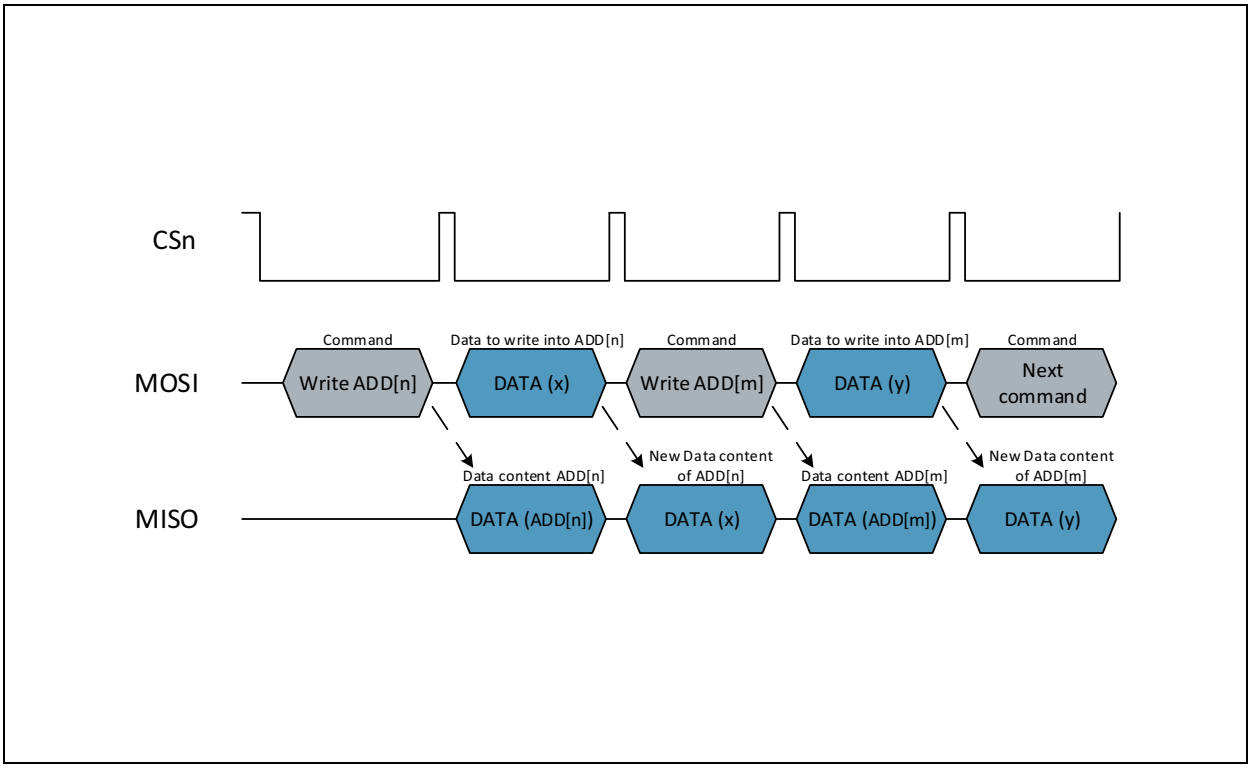

Downloaded from Arrow.com.

Volatile Registers

The volatile registers are shown in Figure 19. Each register has a 14-bit address.

Figure 19:
Volatile Register Table

Address	Name	Default	Description
0x0000	NOP	0x0000	No operation
0x0001	ERRFL	0x0000	Error register
0x0003	PROG	0x0000	Programming register
0x3FFC	DIAAGC	0x0180	Diagnostic and AGC
0x3FFD	MAG	0x0000	CORDIC magnitude
0x3FFE	ANGLEUNC	0x0000	Measured angle without dynamic angle error compensation
0x3FFF	ANGLECOM	0x0000	Measured angle with dynamic angle error compensation

Reading the NOP register is equivalent to a nop (no operation) instruction for the AS5147P.

Figure 20:
ERRFL (0x0001)

Name	Read/Write	Bit Position	Description
PARERR	R	2	Parity error
INVCOMM	R	1	Invalid command error: set to 1 by reading or writing an invalid register address
FRERR	R	0	Framing error: is set to 1 when a non-compliant SPI frame is detected

Reading the ERRFL register automatically clears its contents (ERRFL=0x0000).

Downloaded from Arrow.com.

Figure 21:
PROG (0x0003)

Name	Read/Write	Bit Position	Description
PROGVER	R/W	6	Program verify: must be set to 1 for verifying the correctness of the OTP programming
PROGOTP	R/W	3	Start OTP programming cycle
OTPREF	R/W	2	Refreshes the non-volatile memory content with the OTP programmed content
PROGEN	R/W	0	Program OTP enable: enables reading / writing the OTP memory

The PROG register is used for programming the OTP memory. (See programming the zero position.)

Figure 22:
DIAAGC (0x3FFC)

Name	Read/Write	Bit Position	Description
MAGL	R	11	Diagnostics: Magnetic field strength too low; AGC=0xFF
MAGH	R	10	Diagnostics: Magnetic field strength too high; AGC=0x00
COF	R	9	Diagnostics: CORDIC overflow
LF	R	8	Diagnostics: Loops Finished LF=0:internal offset loops not ready regulated LF=1:internal offset loop finished
AGC	R	7:0	Automatic gain control value

Note(s):

1. LF = Loops Finished

Figure 23:
MAG (0x3FFD)

Name	Read/Write	Bit Position	Description
CMAG	R	13:0	CORDIC magnitude information

Figure 24:
ANGLE (0x3FFE)

Name	Read/Write	Bit Position	Description
CORDICANG	R	13:0	Angle information without dynamic angle error compensation

Downloaded from Arrow.com.

Figure 25:
ANGLECOM (0x3FFF)

Name	Read/Write	Bit Position	Description
DAECANG	R	13:0	Angle information with dynamic angle error compensation

Non-Volatile Registers (OTP)

The OTP (One-Time Programmable) memory is used to store the absolute zero position of the sensor and the customer settings permanently in the sensor IC.

SPI write/read access is possible several times for all non-volatile registers (soft write). Soft written register content will be lost after a hardware reset. The programming itself can be done just once. Therefore the content of the non-volatile registers is stored permanently in the sensor. The register content is still present after a hardware reset and cannot be overwritten. For a correct function of the sensor the OTP programming is not required. If no configuration or programming is done, the non-volatile registers are in the default state 0x0000.

Figure 26:
Non-Volatile Register Table

Address	Name	Default	Description
0x0016	ZPOSM	0x0000	Zero position MSB
0x0017	ZPOSL	0x0000	Zero position LSB/ MAG diagnostic
0x0018	SETTINGS1	0x0001	Custom setting register 1
0x0019	SETTINGS2	0x0000	Custom setting register 2
0x001A	RED	0x0000	Redundancy register

Figure 27:
ZPOSM (0x0016)

Name	Read/Write/Program	Bit Position	Description
ZPOSM	R/W/P	7:0	8 most significant bits of the zero position

Downloaded from Arrow.com.

Figure 28:
ZPOSL (0x0017)

Name	Read/Write/Program	Bit Position	Description
ZPOSL	R/W/P	5:0	6 least significant bits of the zero position
comp_l_error_en	R/W/P	6	This bit enables the contribution of MAGH (Magnetic field strength too high) to the error flag
comp_h_error_en	R/W/P	7	This bit enables the contribution of MAGL (Magnetic field strength too low) to the error flag

Figure 29:
SETTINGS1 (0x0018)

Name	Read/Write/Program	Bit Position	Description
IWIDTH	R/W/P	0	Width of the index pulse I (0 = 3LSB, 1 = 1LSB)
NOISESET	R/W/P	1	Noise setting
DIR	R/W/P	2	Rotation direction
UVW_ABI	R/W/P	3	Defines the PWM Output (0 = ABI is operating, W is used as PWM 1 = UVW is operating, I is used as PWM)
DAECDIS	R/W/P	4	Disable Dynamic Angle Error Compensation (0 = DAE compensation ON, 1 = DAE compensation OFF)
Dataselect	R/W/P	6	This bit defines which data can be read form address 16383dec (3FFFhex). 0->DAECANG 1->CORDICANG
PWMon	R/W/P	7	Enables PWM (setting of UVW_ABI Bit necessary)

Downloaded from Arrow.com.

Figure 30:
SETTINGS2 (0x0019)

Name	Read/Write/Program	Bit Position	Description
UVWPP	R/W/P	2:0	UVW number of pole pairs (000 = 1, 001 = 2, 010 = 3, 011 = 4, 100 = 5, 101 = 6, 110 = 7, 111 = 7)
HYS	R/W/P	4:3	Hysteresis 00 = 3LSB_11Bit 01 = 2LSB_11Bit 10 = 1LSB_11Bit 11 = 0LSB_11Bit
ABIRES	R/W/P	6:5	Resolution of ABI 00 = 12 bits 01 = 11 bits 10 = 10 bits

The ABIRES resolution does not affect the UVW signals.

Figure 31:
RED (0x001A)

Name	Read/Write/ Program	Bit Position	Description
REDUNDANCY	R/W/P	4:0	Redundancy bits. This field enables with force to high one bit of the Non-Volatile register map after a non-successful burning. For more details please refer to the application note "AN5000 – AS5147P_Redundancy_Bits"

Downloaded from Arrow.com.

ABI Incremental Interface

The AS5147P can send the angle position to the host microcontroller through an incremental interface. This interface is available simultaneously with the other interfaces. By default, the incremental interface is set to work at the highest resolution (12 bits), which corresponds to 4096 steps per revolution or 1024 pulses per revolution (ppr). This resolution can be changed with the OTP bits ABIRES.

The phase shift between the A and B signals indicates the rotation direction: clockwise (A leads, B follows) or counterclockwise (B leads, A follows). During the start-up time, after power on to the chip, all three ABI signals are high. The DIR bit can be used to invert the sense of the rotation direction.

The IWIDTH setting programs the width of the index pulse from 3 LSB (default) to 1 LSB.

Figure 32:
ABI Signals at 11-Bit Resolution

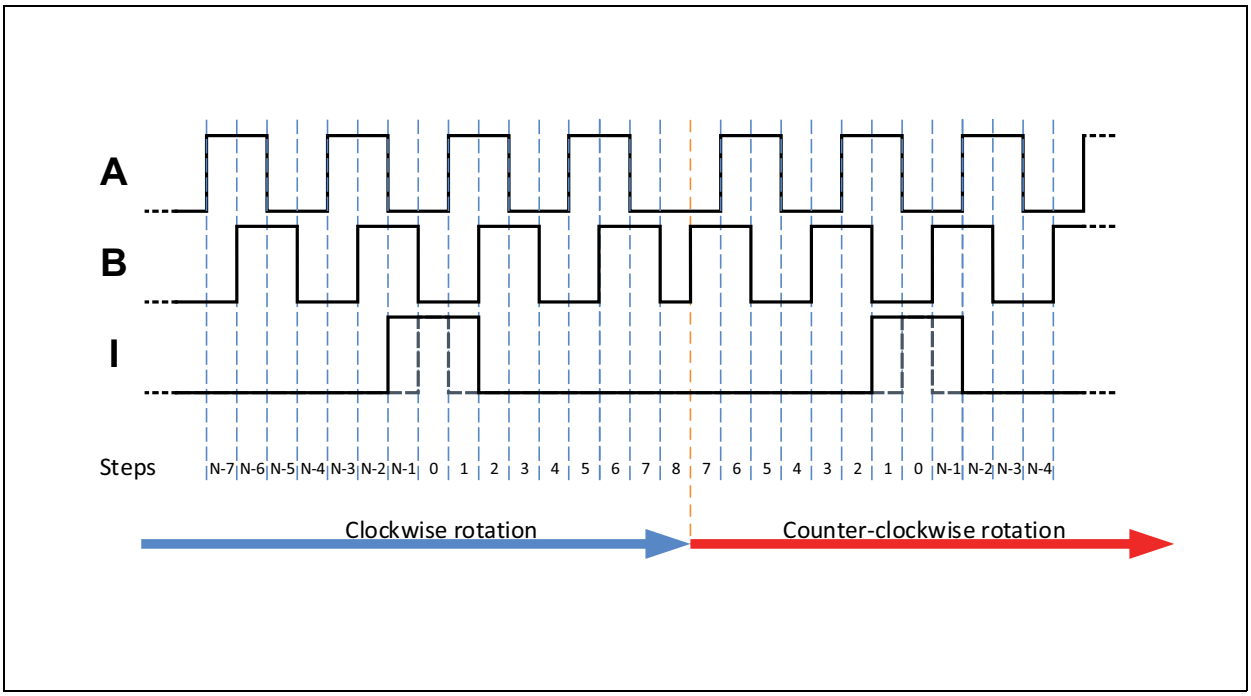

N =4096 for 12-Bit resolution, and N = 1024 for 10-bit resolution.

The Figure 32 shows the ABI signal flow if the magnet rotates in clockwise direction and counter-clockwise direction (DIR=0).

The rotation direction of the magnet is defined as clockwise (DIR=0) when the view is from the topside of AS5147P.

Downloaded from Arrow.com.

UVW Commutation Interface

The AS5147P can emulate the UVW signals generated by the three discrete Hall switches commonly used in BLDC motors. The UVWPP field in the SETTINGS register selects the number of pole pairs of the motor (from 1 to 7 pole pairs). The UVW signals are generated with 14-bit resolution.

During the start-up time, after power on of the chip, the UVW signals are low.

Figure 33:
UVW Signals

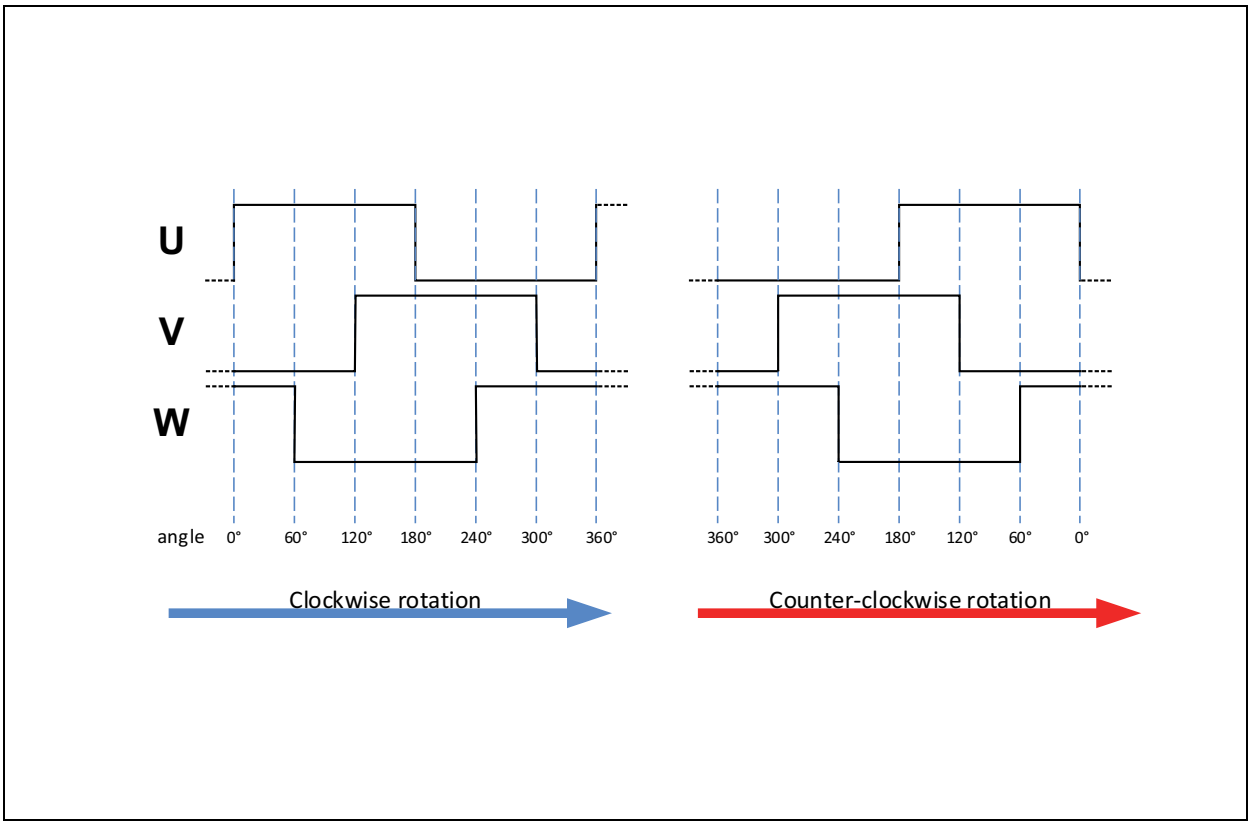

The Figure 33 shows the UVW signal flow if the magnet rotates in clockwise direction and counter-clockwise direction (DIR=0). The rotation direction of the magnet is defined as clockwise (DIR=0) when the view is from the topside of AS5047D. With the bit DIR, it is possible to invert the rotation direction.

Downloaded from Arrow.com.

PWM

The PWM can be enabled with the bit setting PWMon. The PWM encoded signal is displayed on the pin W or the pin I. The bit setting UVW_ABI defines which output is used as PWM. The PWM output consists of a frame of 4119 PWM clock periods, as shown in Figure 34. The PWM frame has the following sections:

- 12 PWM Clocks for INIT
- 4 PWM Clocks for Error detection
- 4095 PWM clock periods of data
- 8 PWM clock periods low

The angle is represented in the data part of the frame with a 12-bit resolution. One PWM clock period represents 0.088 degree and has a typical duration of 444 ns.

If the embedded diagnostic of the AS5147P detects any error the PWM interface displays only 12 clock periods high (0.3% duty-cycle). Respectively the 4 clocks for error detection are forced to low.

Figure 34:
Pulse Width Modulation Encoded Signal

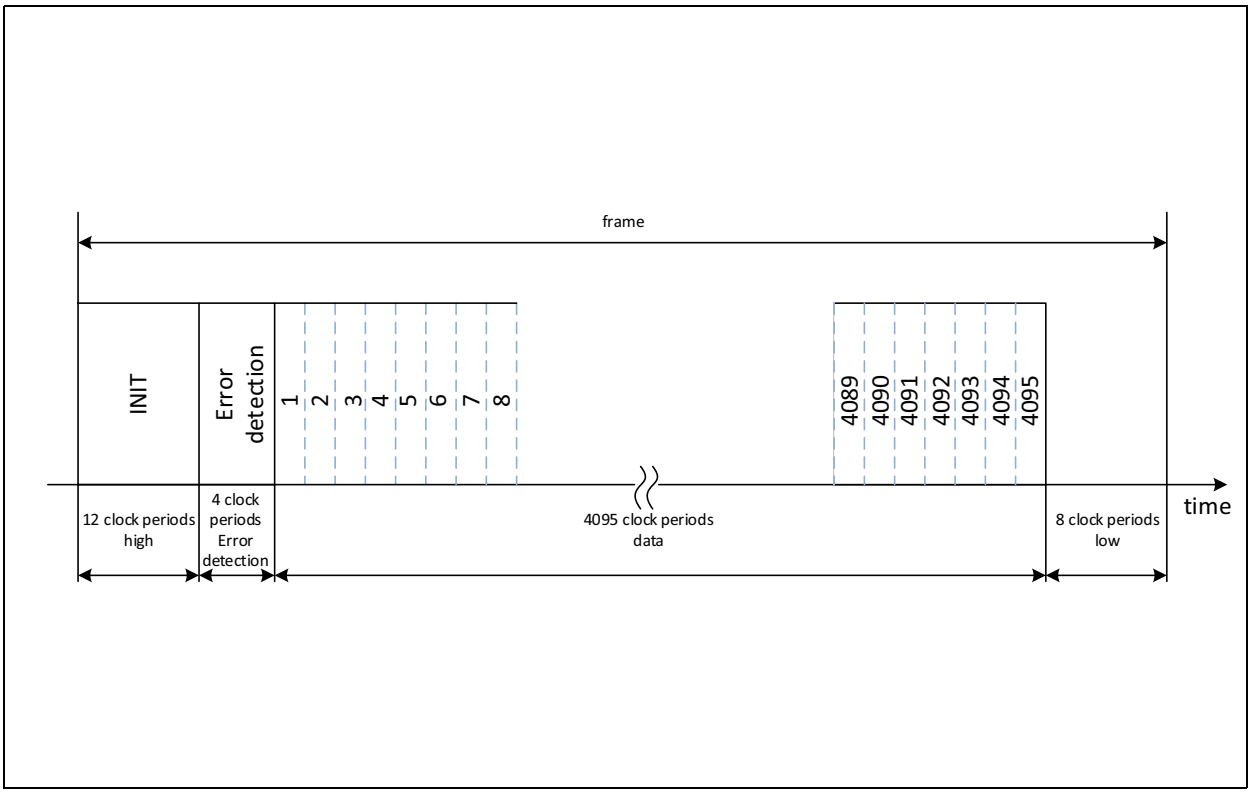

Downloaded from Arrow.com.

Hysteresis

The hysteresis can be programmed in the HYS bits of the SETTINGS2 register. The hysteresis can be 1, 2, or 3 LSB bits, in which the LSB is defined by the ABI resolution setting (ABIRES).

Figure 35:
Hysteresis Settings

HYS	Hysteresis Related to 11 Bit ABI Resolution
00	3
01	2
10	1
11	0

Automatic Gain Control (AGC) and CORDIC Magnitude

The AS5147P uses AGC to compensate for variations in the magnetic field strength due to changes of temperature, air gap between the chip and the magnet, and demagnetization of the magnet. The automatic gain control value can be read in the AGC field of the DIAAGC register. Within the specified input magnetic field strength (Bz), the Automatic Gain Control keeps the CORDIC magnitude value (MAG) constant. Below the minimum input magnetic field strength, the CORDIC magnitude decreases and the MAGL bit is set.

Diagnostic Features

The AS5147P supports embedded self-diagnostics.

MAGH: magnetic field strength too high, set if AGC = 0x00. This indicates the non-linearity error may be increased.

MAGL: magnetic field strength too low, set high if AGC = 0xFF. This indicates the output noise of the measured angle may be increased.

COF: CORDIC overflow. This indicates the measured angle is not reliable.

LF: offset compensation completed. At power-up, an internal offset compensation procedure is started, and this bit is set when the procedure is completed.

Downloaded from Arrow.com.

LF Error / COF Error

In case of an LF or COF error, all outputs are changing into a safe state:

SPI Output: Information in the DIAAGC (0x3FFC) register. The angle information is still valid.

PWM Output: PWM Clock Period 13 - 16 of the first 16 PWM Clock Periods = low. Additional there is no angle information valid (all 4096 clock periods = low)

ABI Output: The state of ABI is frozen to ABI = 111

UVW Output: The state of UVW is frozen to UVW = 000

MAGH Error / MAGL Error

Default diagnostic setting for MAGH error /MAGL error:

In case of a MAGH error or MAGL error, there is no safe state on the PWM,ABI or UVW outputs if comp_h_error_en is 0 and comp_l_error_en is 0.

The error flags can be read out with the DIAAGC (0x3FFC) register.

Enhanced diagnosis setting for MAGH error / MAGL error:

In case of a MAGH error or MAGL error, the PWM,ABI or UVW outputs are going into a safe state if comp_h_error_en is 1 and comp_l_error_en is 1. The device is operating with the performance as explained.

SPI Output: Information in the DIAAGC (0x3FFC) register. The angle information is still valid, if the MAGH or MAGL error flag is on.

PWM Output: PWM Clock Period 13 - 16 of the first 16 PWM Clock

Periods = low. Additional there is no angle information valid (all 4096 clock periods = low)

ABI Output: The state of ABI is frozen to ABI = 111

UVW Output: The state of UVW is frozen to UVW = 000

Important: When comp_(h/l)_error_en is enabled a marginal magnetic field input can cause toggling of MAGH or MAGL which will lead to toggling of the ABI/UVW outputs between operational mode and failure mode.

Downloaded from Arrow.com.

Application Information

Burn and Verification of the OTP Memory

Step-by-step procedure to permanently program the non-volatile memory (OTP):

Figure 36:
Minimum Programming Diagram for the AS5147P in 5V Operation

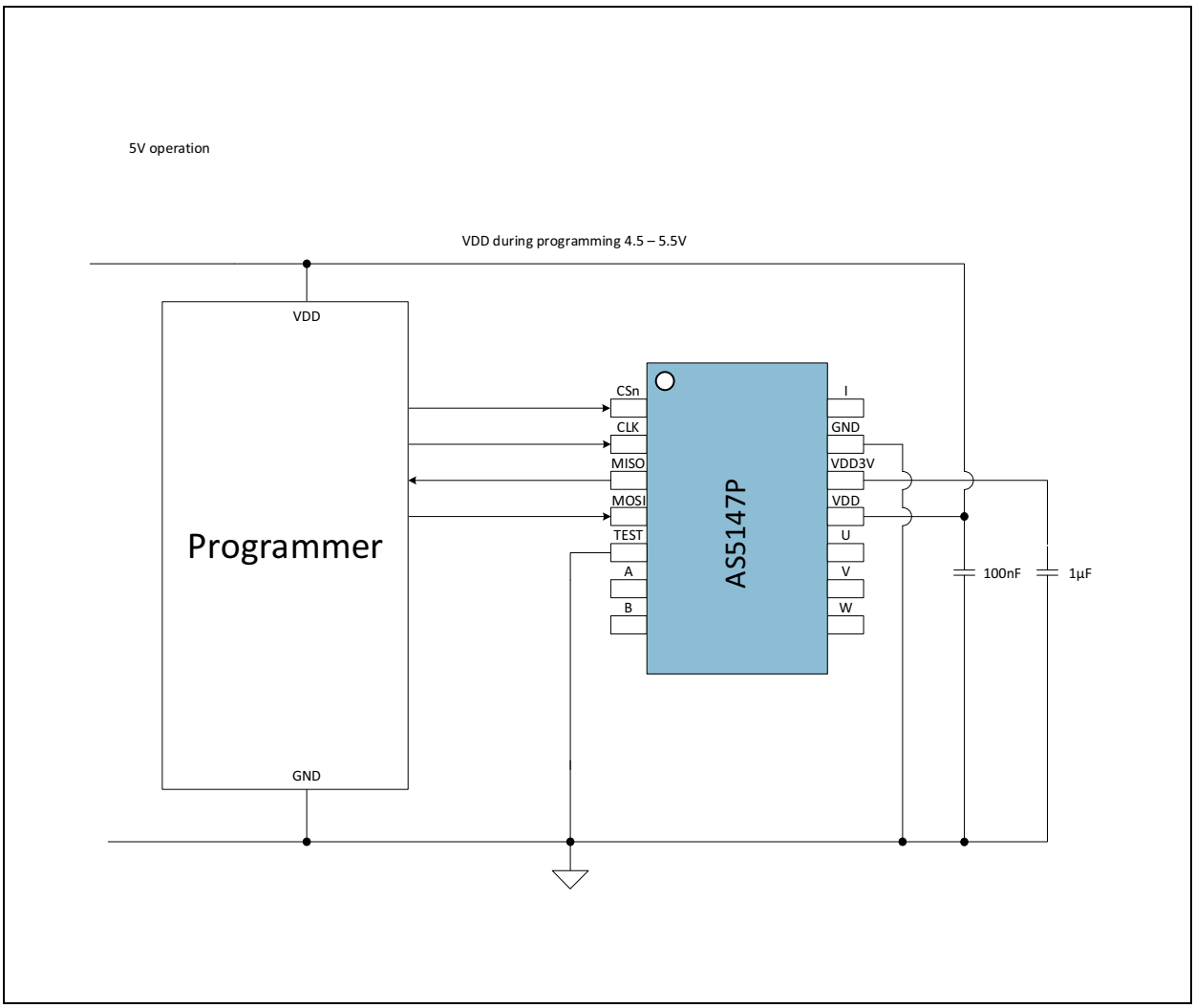

Note(s):

1. In terms of EMC and for remote application, additional circuits are necessary.

Downloaded from Arrow.com.

Figure 37:
Minimum Programming Diagram for the AS5147P in 3.3V Operation

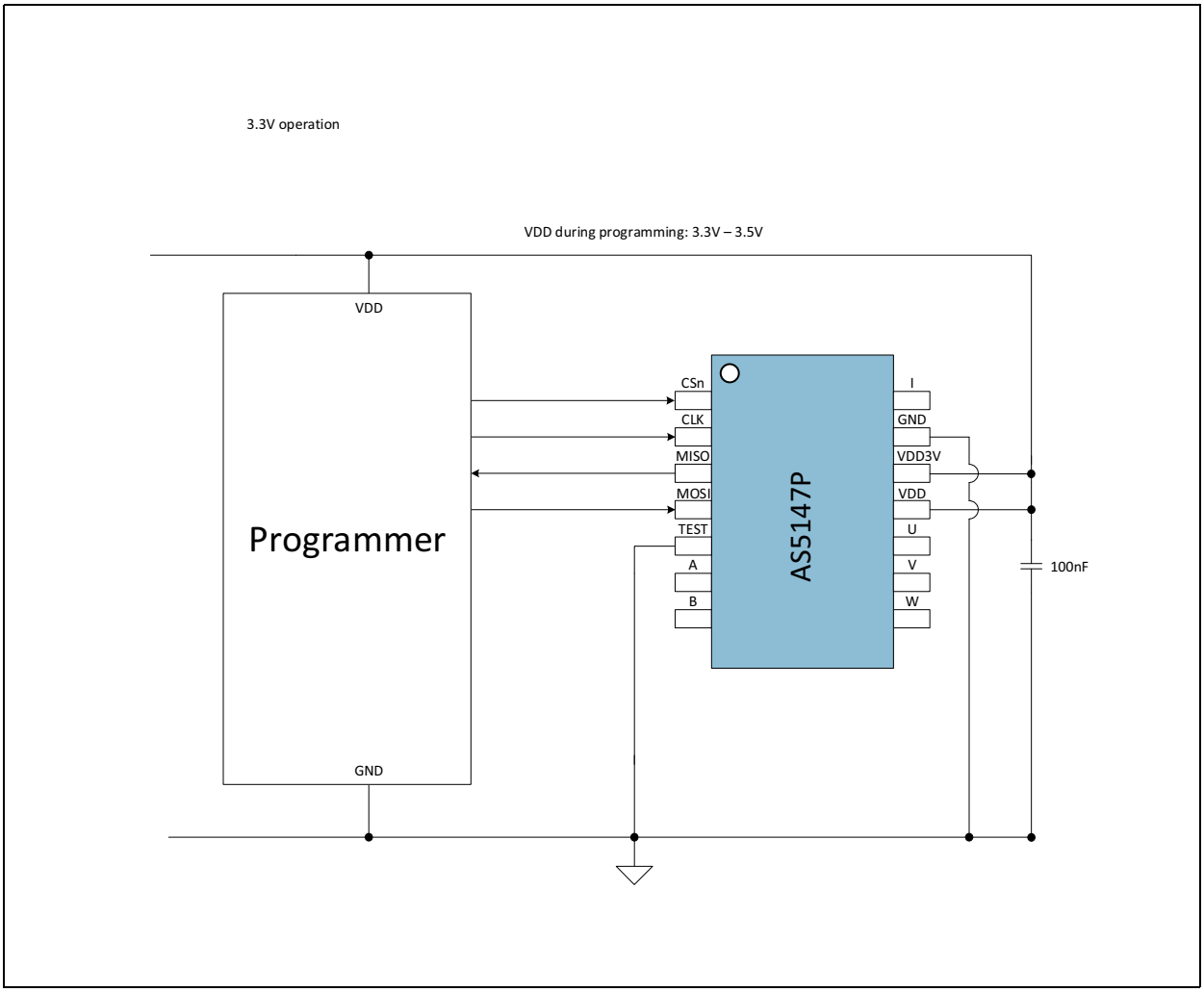

Note(s):

1. In terms of EMC and for remote application, additional circuits are necessary.

Figure 38:
Programming Parameter

Symbol	Parameter	Conditions	Min	Typ	Max	Units
T_{aProg}	Programming temperature	Programming @ Room Temperature (25°C ± 20°C	5		45	°C
V_{DD}	Positive supply voltage	5 V operation mode. Supply voltage during programming	4.5	5	5.5	V
V_{DD}	Positive supply voltage	3.3 V operation mode. Supply voltage during programming	3.3		3.5	V
I_{Prog}	Current for programming	Max current during OTP burn procedure.			100	mA

Downloaded from Arrow.com.

The programming can either be performed in 5V operation using the internal LDO (1uF on regulator output pin), or in 3V Operation but using a supply voltage between 3.3V and 3.5V.

1. Power on cycle
2. Write the SETTINGS1 and SETTINGS2 registers with the Custom settings for this application
3. Place the magnet at the desired zero position
4. Read out the measured angle from the ANGLE register
5. Write ANGLE [5:0] into the ZPOSL register and ANGLE [13:6] into the ZPOSM register
6. Read reg(0x0016) to reg(0x0019) → Read register step1
7. Comparison of written content (settings and angle) with content of read register step1
8. If point 7 is correct, enable OTP read / write by setting PROGEN = 1 in the PROG register
9. Start the OTP burn procedure by setting PROGOTP = 1 in the PROG register
10. Read the PROG register until it reads 0x0001 (Programming procedure complete)
11. Clear the memory content writing 0x00 in the whole non-volatile memory
12. Set the PROGVER = 1 to set the Guard band for the guard band test[(1)].
13. Refresh the non-volatile memory content with the OTP content by setting OTPREF = 1
14. Read reg(0x0016) to reg(0x0019) → Read register step2
15. Comparison of written content (settings and angle) with content of read register step2.
    Mandatory: guard band test
16. New power on cycle, if **point 16** is correct. If **point 16** fails, the test with the guard band test[1] was not successful and the device is incorrectly programmed. A reprogramming is not allowed!
17. Read reg(0x0016) to reg(0x0019) → Read register step3
18. Comparision of written content (settings and angle) with content of read register step3.
19. If **point 19** is correct, the programming was successful. If **point 19** fails, device is incorrectly programmed. A reprogramming is not allowed

1. Guard band test:
   - Restricted to temperature range: 25 °C ± 20 °C
   - Right after the programming procedure (max. 1 hour with same conditions 25°C ± 20 °C), same VDD voltage.

The guard band test is only for the verification of the burned OTP fuses during the programming sequence.
A use of the guard band in other cases is not allowed.

Downloaded from Arrow.com.

Figure 39:
OTP Memory Burn and Verification Flowchart

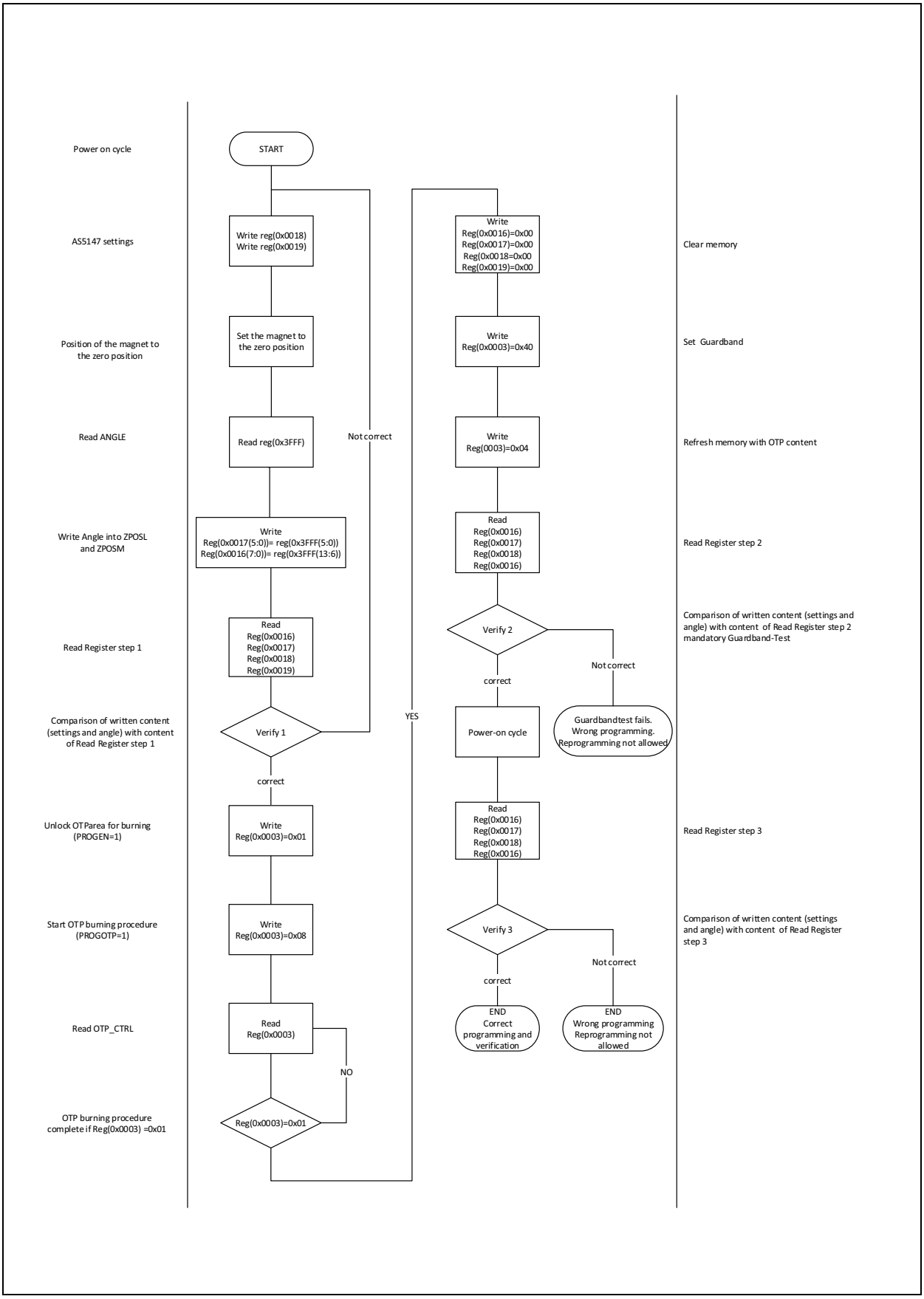

Downloaded from Arrow.com.

Figure 40:
Minimum Circuit Diagram for the AS5147P

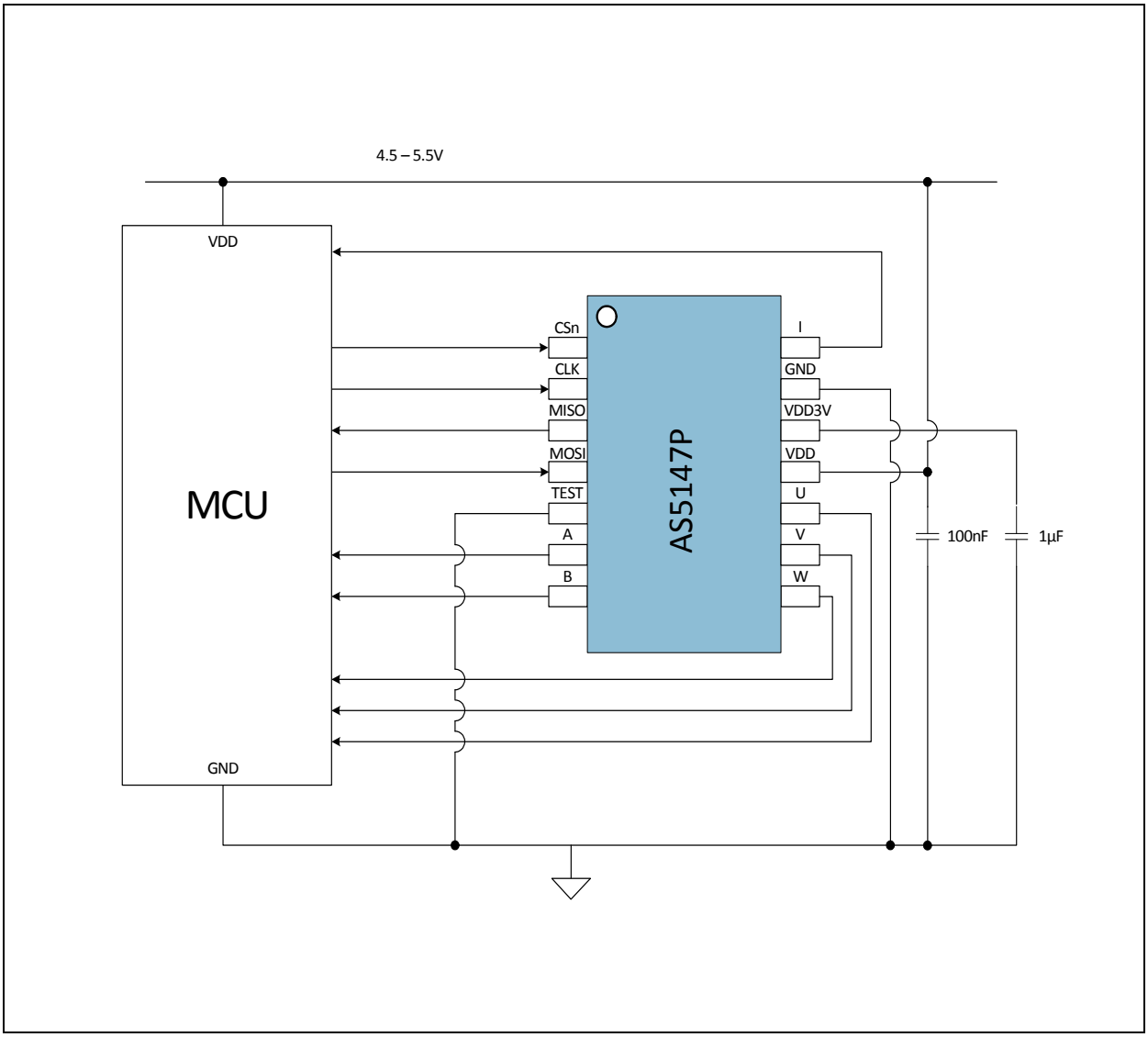

Note(s):

1. In terms of EMC and for remote application, additional circuits are necessary.

Downloaded from Arrow.com.

Package Drawings & Markings

The axis of the magnet must be aligned over the center of the package.

Figure 41:
Package Outline Drawing

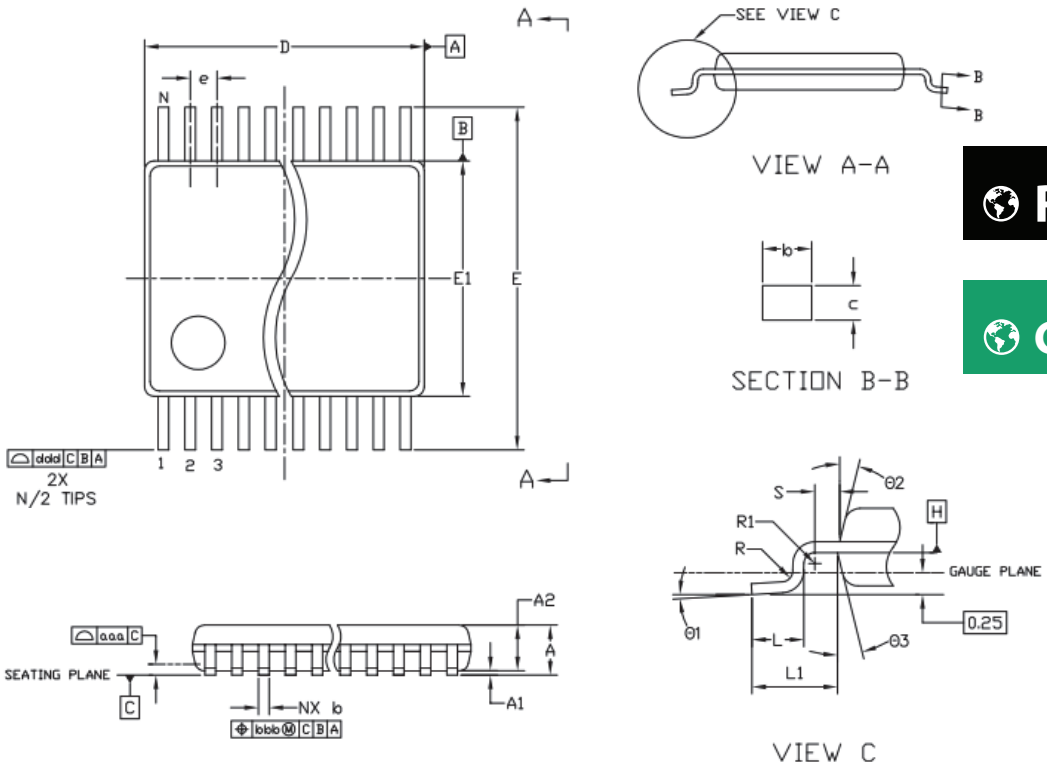

Symbol	Min	Nom	Max
A	-	-	1.20
A1	0.05	-	0.15
A2	0.80	1.00	1.05
b	0.19	-	0.30
c	0.09	-	0.20
D	4.90	5.00	5.10
E	-	6.40 BSC	-
E1	4.30	4.40	4.50
e	-	0.65 BSC	-
L	0.45	0.60	0.75
L1	-	1.00 REF	-

Symbol	Min	Nom	Max
R	0.09	-	-
R1	0.09	-	-
S	0.20	-	-
Θ1	0°	-	8°
Θ2	-	12 REF	-
Θ3	-	12 REF	-
aaa	-	0.10	-
bbb	-	0.10	-
ccc	-	0.05	-
ddd	-	0.20	-
N		14	

Note(s):

1. Dimensioning and tolerancing conform to ASME Y14.5M - 1994.
2. All dimensions are in millimeters. Angles are in degrees.
3. N is the total number of terminals.

Downloaded from Arrow.com.

Figure 42:
Packaging Code

YY	WW	M	ZZ	@
Last two digits of the current year	Manufacturing week	Plant identifier	Free choice / traceability code	Sublot identifier

Figure 43:
Package Marking

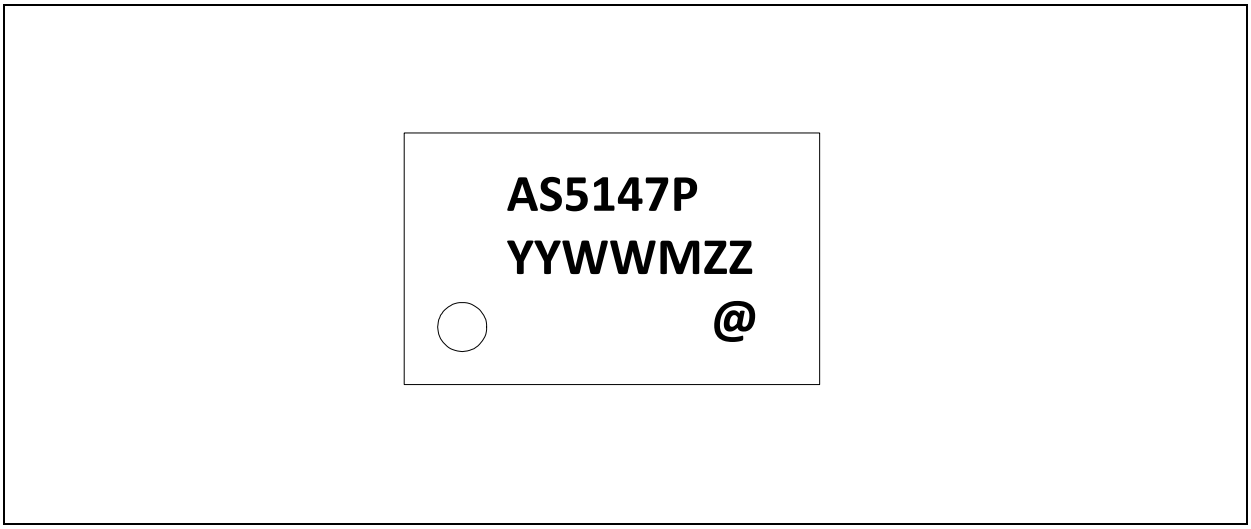

Downloaded from Arrow.com.

Mechanical Data

Figure 44:
Angle Detection by Default (no zero position programmed)

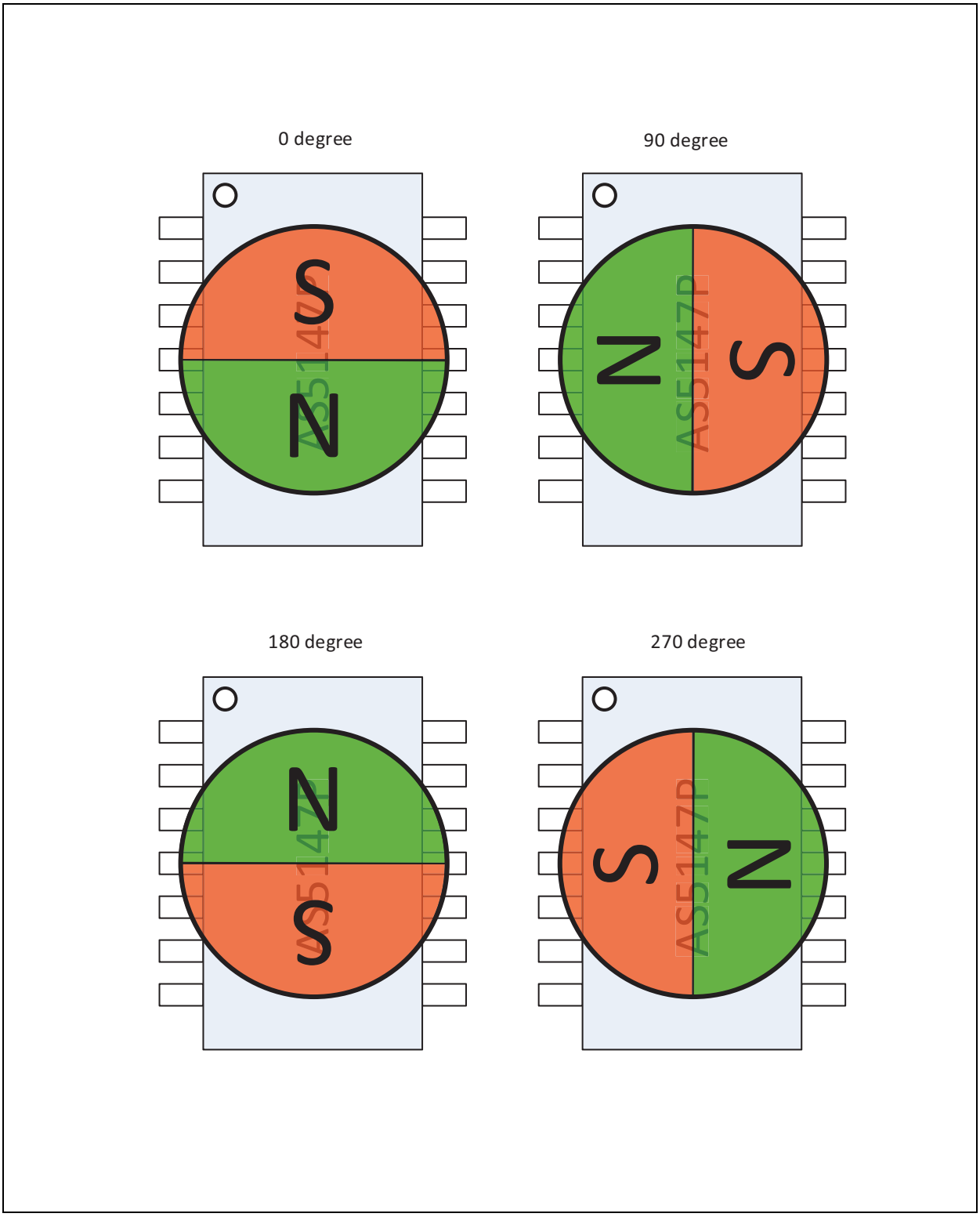

Downloaded from Arrow.com.

Figure 45:
DIe Placement and Hall Array Position

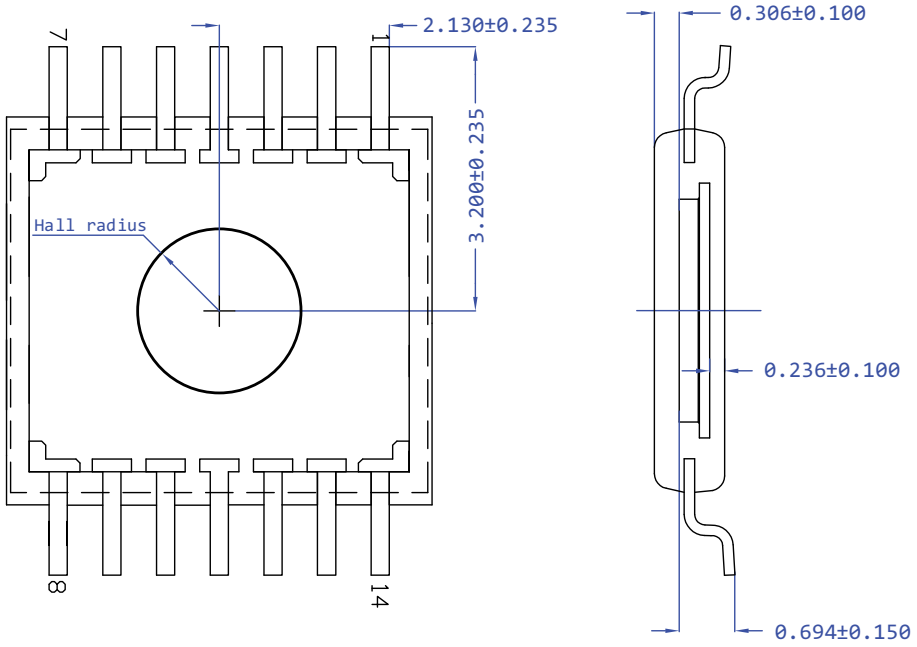

Note(s):

1. Dimensions are in mm.
2. The Hall array center is located in the center of the IC package. Hall array radius is 1.1mm.
3. Die thickness is 203µm nominal.

Downloaded from Arrow.com.

Ordering & Contact Information

Figure 46:
Ordering Information

Ordering Code	Package	Marking	Delivery Form	Delivery Quantity
AS5147P-HTST	TSSOP-14	AS5147P	13" Tape & Reel in dry pack	4500 pcs/reel
AS5147P-HTSM	TSSOP-14	AS5147P	7" Tape & Reel in dry pack	500 pcs/reel

Buy our products or get free samples online at:
www.ams.com/ICdirect

Technical Support is available at:
www.ams.com/Technical-Support

Provide feedback about this document at:
www.ams.com/Document-Feedback

For further information and requests, e-mail us at:
ams_sales@ams.com

For sales offices, distributors and representatives, please visit:
www.ams.com/contact

Headquarters
ams AG
Tobelbaderstrasse 30
8141 Premstaetten
Austria, Europe

Tel: +43 (0) 3136 500 0

Website: www.ams.com

Downloaded from Arrow.com.

RoHS Compliant & ams Green Statement

RoHS: The term RoHS compliant means that ams AG products fully comply with current RoHS directives. Our semiconductor products do not contain any chemicals for all 6 substance categories, including the requirement that lead not exceed 0.1% by weight in homogeneous materials. Where designed to be soldered at high temperatures, RoHS compliant products are suitable for use in specified lead-free processes.

ams Green (RoHS compliant and no Sb/Br): ams Green defines that in addition to RoHS compliance, our products are free of Bromine (Br) and Antimony (Sb) based flame retardants (Br or Sb do not exceed 0.1% by weight in homogeneous material).

Important Information: The information provided in this statement represents ams AG knowledge and belief as of the date that it is provided. ams AG bases its knowledge and belief on information provided by third parties, and makes no representation or warranty as to the accuracy of such information. Efforts are underway to better integrate information from third parties. ams AG has taken and continues to take reasonable steps to provide representative and accurate information but may not have conducted destructive testing or chemical analysis on incoming materials and chemicals. ams AG and ams AG suppliers consider certain information to be proprietary, and thus CAS numbers and other limited information may not be available for release.

Downloaded from Arrow.com.

Copyrights & Disclaimer

Copyright ams AG, Tobelbader Strasse 30, 8141 Premstaetten, Austria-Europe. Trademarks Registered. All rights reserved. The material herein may not be reproduced, adapted, merged, translated, stored, or used without the prior written consent of the copyright owner.

Devices sold by ams AG are covered by the warranty and patent indemnification provisions appearing in its General Terms of Trade. ams AG makes no warranty, express, statutory, implied, or by description regarding the information set forth herein. ams AG reserves the right to change specifications and prices at any time and without notice. Therefore, prior to designing this product into a system, it is necessary to check with ams AG for current information. This product is intended for use in commercial applications. Applications requiring extended temperature range, unusual environmental requirements, or high reliability applications, such as military, medical life-support or life-sustaining equipment are specifically not recommended without additional processing by ams AG for each application. This product is provided by ams AG "AS IS" and any express or implied warranties, including, but not limited to the implied warranties of merchantability and fitness for a particular purpose are disclaimed.

ams AG shall not be liable to recipient or any third party for any damages, including but not limited to personal injury, property damage, loss of profits, loss of use, interruption of business or indirect, special, incidental or consequential damages, of any kind, in connection with or arising out of the furnishing, performance or use of the technical data herein. No obligation or liability to recipient or any third party shall arise or flow out of ams AG rendering of technical or other services.

Downloaded from Arrow.com.

Document Status

Document Status	Product Status	Definition
Product Preview	Pre-Development	Information in this datasheet is based on product ideas in the planning phase of development. All specifications are design goals without any warranty and are subject to change without notice
Preliminary Datasheet	Pre-Production	Information in this datasheet is based on products in the design, validation or qualification phase of development. The performance and parameters shown in this document are preliminary without any warranty and are subject to change without notice
Datasheet	Production	Information in this datasheet is based on products in ramp-up to full production or full production which conform to specifications in accordance with the terms of ams AG standard warranty as given in the General Terms of Trade
Datasheet (discontinued)	Discontinued	Information in this datasheet is based on products which conform to specifications in accordance with the terms of ams AG standard warranty as given in the General Terms of Trade, but these products have been superseded and should not be used for new designs

Downloaded from Arrow.com.

Revision Information

Changes from 1-01 (2015-May-12) to current revision 1-02 (2016-Apr-27)	Page
Updated text under Absolute Maximum Ratings	6
Updated Figure 6	7
Updated Figure 9	9
Updated text under Detailed Description	10
Updated text under Dynamic Angle Error Compensation	12
Updated SPI Transaction section	14
Updated Figure 22	18
Updated Figure 26	19
Updated Figure 28	20
Updated ABI Incremental Interface section	22
Updated Figure 33 and text under it	23
Updated Figure 34	24
Updated text under Diagnostic Features	25
Updated text under MAGH Error / MAGL Error	26
Updated text under Figure 38	28
Updated Figure 39	30
Updated Figure 44	34

Note(s):

1. Page and figure numbers for the previous version may differ from page and figure numbers in the current revision.
2. Correction of typographical errors is not explicitly mentioned.

Downloaded from Arrow.com.

Content Guide

1 General Description
2 Key Benefits & Features
2 Applications
3 Block Diagram

4 Pin Assignment
6 Absolute Maximum Ratings
7 Electrical Characteristics
8 Magnetic Characteristics
8 System Characteristics
9 Timing Characteristics

10 Detailed Description
11 Power Management
12 Dynamic Angle Error Compensation
13 SPI Interface (Slave)
13 SPI Timing
14 SPI Transaction
17 Volatile Registers
19 Non-Volatile Registers (OTP)
22 ABI Incremental Interface
23 UVW Commutation Interface
24 PWM
25 Hysteresis
25 Automatic Gain Control (AGC) and CORDIC Magnitude
25 Diagnostic Features
26 LF Error / COF Error
26 MAGH Error / MAGL Error

27 Application Information
27 Burn and Verification of the OTP Memory

32 Package Drawings & Markings
34 Mechanical Data
36 Ordering & Contact Information
37 RoHS Compliant & ams Green Statement
38 Copyrights & Disclaimer
39 Document Status
40 Revision Information

Downloaded from Arrow.com.