VICOR CONFIDENTIAL

THIS DOCUMENT AND THE DATA DISCLOSED HEREIN OR HEREWITH IS NOT TO BE REPRODUCED, USED OR DISCLOSED IN WHOLE OR IN PART TO ANYONE WITHOUT THE PERMISSION OF VICOR CORP.

| REV. | DESCRIPTION | | DATE | APPROVED |
|---|---|---|---|---|
| 1 | RELEASED PER E080703 | SA | 04/08/08 | REJH |
| 2 | REVISED PER E100944 | KUK | 07/22/10 | DCS |
| 3 | REVISED PER E101095 | KUK | 08/30/10 | GCK |
| 4 | REVISED PER E1020762 | REJH | 08/22/12 | KUK |

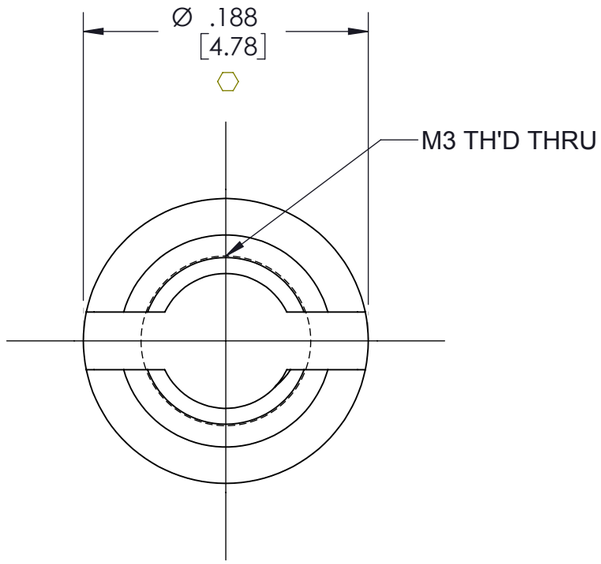


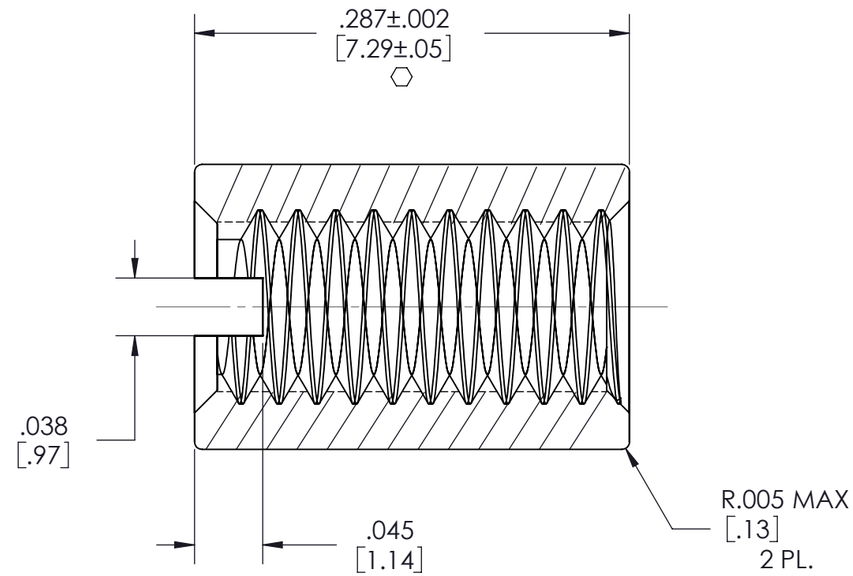


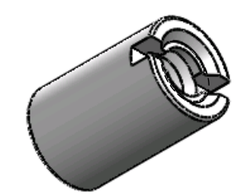

NOTES:
⬡ 1. MATERIAL: 300 SERIES STAINLESS STEEL PER AISI.
2. REMOVE ALL BURRS AND SHARP EDGES.
⬡ 3. CLEAR FINISH. RoHS COMPIANT LEAD FREE AND CHROMIUM FREE PER CST-0001 LATEST REVISION.
4. ⬡ DENOTES CRITICAL CHARACTERISTIC FOR LOT INSPECTION.
5. KIT P/N 34717, 34718 AND 34709.
5.DIMENSIONS ARE INCHES ONLY.

| DRAWN BY | DATE |
|---|---|
| Mike Lafleur | 12/03/2007 |

UNLESS OTHERWISE SPECIFIED
DIMENSIONS ARE : INCH / [MM]

TOLERANCES ARE:
DECIMALS
X.XX [X.X] = ±0.01 [0.25]
X.XXX [X.XX] = ±0.005 [0.127]
ANGLES
±1°

THIRD ANGLE PROJECTION

DO NOT SCALE DRAWING

VICOR

SWD

**STANDOFF, 0.287 LG FEMALE-FEMALE**

| SIZE | CAGE CODE | DWG NO | REV |
|---|---|---|---|
| B | 67131 | 34456 | 4 |

SCALE 10:1

SHEET 1 OF 1

Downloaded from Arrow.com.