$V_{(BR)DSS}$	100V
$R_{DS(on)}$ max.	26.5mΩ
I_D	36A

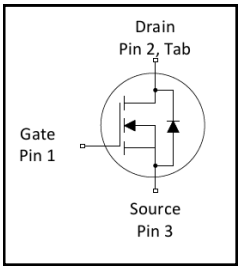

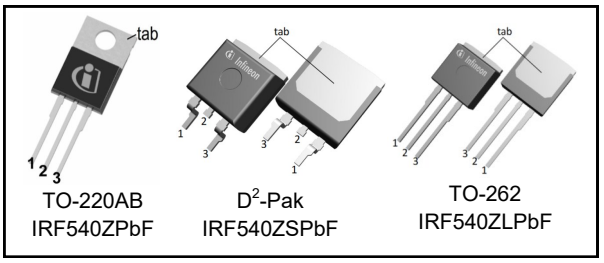

G	D	S
Gate	Drain	Source

Features

- Advanced Process Technology
- Ultra Low On-Resistance
- 175°C Operating Temperature
- Fast Switching
- Repetitive Avalanche Allowed up to Tjmax
- Lead-Free

Description

This HEXFET Power MOSFETs utilizes the latest processing techniques to achieve extremely low on-resistance per silicon area. Additional features of this design are a 175°C junction operating temperature, fast switching speed and improved repetitive avalanche rating. These features combine to make this design an extremely efficient and reliable device for use in a wide variety of applications.

Base part number	Package Type	Standard Pack		Orderable Part Number
		Form	Quantity	
IRF540ZPbF	TO-220	Tube	50	IRF540ZPbF
IRF540ZSPbF	D^2-Pak	Tape and Reel	800	IRF540ZSPbF
IRF540ZLPbF	TO-262	Tube	50	IRF540ZLPbF

Absolute Maximum Rating

Symbol	Parameter	Max.	Units
I_D @ T_C = 25°C	Continuous Drain Current, V_{GS} @ 10V (Silicon Limited)	36	A
I_D @ T_C = 100°C	Continuous Drain Current, V_{GS} @ 10V	25	
I_{DM}	Pulsed Drain Current ①	140	
P_D @T_C = 25°C	Maximum Power Dissipation	92	W
	Linear Derating Factor	0.61	W/°C
V_{GS}	Gate-to-Source Voltage	± 20	V
E_{AS}	Single Pulse Avalanche Energy (Thermally Limited)②	83	mJ
E_{AS} (tested)	Single Pulse Avalanche Energy Tested Value ⑥	120	
I_{AR}	Avalanche Current ①	See Fig. 12a,12b,15,16	A
E_{AR}	Repetitive Avalanche Energy ⑤		mJ
T_J T_{STG}	Operating Junction and Storage Temperature Range	-55 to + 175	°C
	Soldering Temperature, for 10 seconds (1.6mm from case)	300	
	Mounting torque, 6-32 or M3 screw⑦	10 lbf•in (1.1N•m)	

Thermal Resistance

Symbol	Parameter	Typ.	Max.	Units
$R_{\theta JC}$	Junction-to-Case	——	1.64	°C/W
$R_{\theta CS}$	Case-to-Sink, Flat, Greased Surface ⑦	0.50	——	
$R_{\theta JA}$	Junction-to-Ambient ⑦	——	62	
$R_{\theta JA}$	Junction-to-Ambient (PCB Mount, steady state) ⑧	——	40	

Downloaded from Arrow.com.

Static @ T_J = 25°C (unless otherwise specified)

	Parameter	Min.	Typ.	Max.	Units	Conditions
$V_{(BR)DSS}$	Drain-to-Source Breakdown Voltage	100	——	——	V	V_{GS} = 0V, I_D = 250μA
$\Delta V_{(BR)DSS}/\Delta T_J$	Breakdown Voltage Temp. Coefficient	——	0.093	——	V/°C	Reference to 25°C, I_D = 1mA
$R_{DS(on)}$	Static Drain-to-Source On-Resistance	——	21	26.5	mΩ	V_{GS} = 10V, I_D = 22A ④
$V_{GS(th)}$	Gate Threshold Voltage	2.0	——	4.0	V	V_{DS} = V_{GS}, I_D = 250μA
gfs	Forward Trans conductance	36	——	——	S	V_{DS} = 25V, I_D = 22A④
I_{DSS}	Drain-to-Source Leakage Current	——	——	20	μA	V_{DS} = 100V, V_{GS} = 0V
		——	——	250		V_{DS} = 100V,V_{GS} = 0V,T_J =125°C
I_{GSS}	Gate-to-Source Forward Leakage	——	——	200	nA	V_{GS} = 20V
	Gate-to-Source Reverse Leakage	——	——	-200		V_{GS} = -20V

Dynamic Electrical Characteristics @ T_J = 25°C (unless otherwise specified)

Q_g	Total Gate Charge	——	42	63	nC	I_D = 22A
Q_{gs}	Gate-to-Source Charge	——	9.7	——		V_{DS} = 80V
Q_{gd}	Gate-to-Drain Charge	——	15	——		V_{GS} = 10V④
$t_{d(on)}$	Turn-On Delay Time	——	15	——	ns	V_{DD} = 50V
t_r	Rise Time	——	51	——		I_D = 22A
$t_{d(off)}$	Turn-Off Delay Time	——	43	——		R_G= 12Ω
t_f	Fall Time	——	39	——		V_{GS} = 10V④
L_D	Internal Drain Inductance	——	4.5	——	nH	Between lead, 6mm (0.25in.) from package and center of die contact 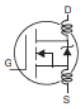
L_S	Internal Source Inductance	——	7.5	——		
C_{iss}	Input Capacitance	——	1770	——	pF	V_{GS} = 0V
C_{oss}	Output Capacitance	——	180	——		V_{DS} = 25V
C_{rss}	Reverse Transfer Capacitance	——	100	——		f = 1.0MHz, See Fig.5
C_{oss}	Output Capacitance	——	730	——		V_{GS} = 0V,V_{DS} = 1.0V, f = 1.0MHz
C_{oss}	Output Capacitance	——	110	——		V_{GS} = 0V,V_{DS} = 80V, f = 1.0MHz
$C_{oss\ eff.}$	Effective Output Capacitance	——	170	——		V_{GS} = 0V,V_{DS} = 0V to 80V

Diode Characteristics

	Parameter	Min.	Typ.	Max.	Units	Conditions
I_S	Continuous Source Current (Body Diode)	——	——	36	A	MOSFET symbol showing the integral reverse p-n junction diode. 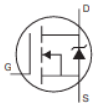
I_{SM}	Pulsed Source Current (Body Diode) ①	——	——	140		
V_{SD}	Diode Forward Voltage	——	——	1.3	V	T_J = 25°C,I_S = 22A,V_{GS} = 0V ④
t_{rr}	Reverse Recovery Time	——	33	50	ns	T_J = 25°C ,I_F = 22A, V_{DD} = 50V
Q_{rr}	Reverse Recovery Charge	——	41	62	nC	di/dt = 100A/μs ④

Notes:

① Repetitive rating; pulse width limited by max. junction temperature. (See fig. 11).

② Starting T_J = 25°C, L = 0.46mH, R_G = 25Ω, I_{AS} = 20A, V_{GS} =10V. Part not recommended for use above this value.

③ Pulse width ≤ 1.0ms; duty cycle ≤ 2%.

④ C_{oss} eff. is a fixed capacitance that gives the same charging time as C_{oss} while V_{DS} is rising from 0 to 80% V_{DSS} .

⑤ Limited by T_{Jmax} , see Fig.12a, 12b, 15, 16 for typical repetitive avalanche performance.

⑥ This value determined from sample failure population. 100% tested to this value in production.

⑦ This is only applied to –TO-220AB package.

⑧ This is applied to D2 Pak, when mounted on 1" square PCB (FR-4 or G-10 Material). For recommended footprint and soldering techniques refer to application note# AN-994.

Downloaded from Arrow.com.

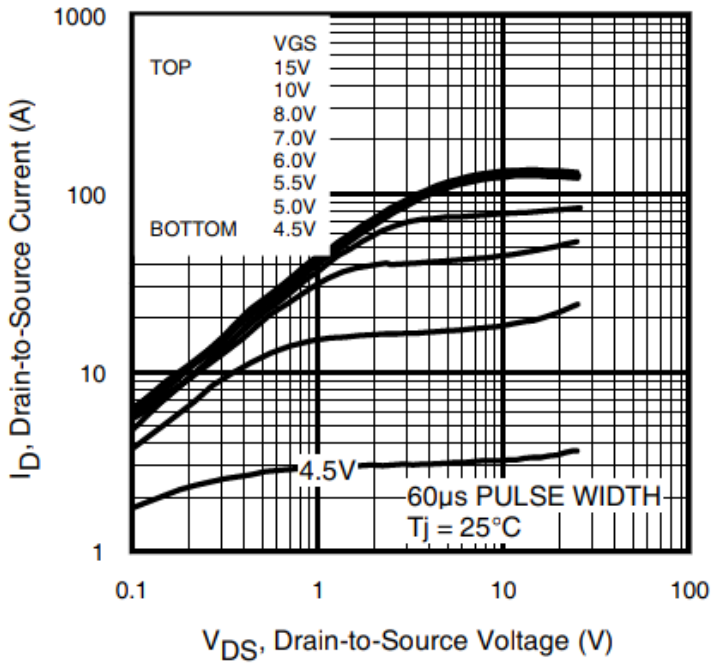

Fig. 1 Typical Output Characteristics

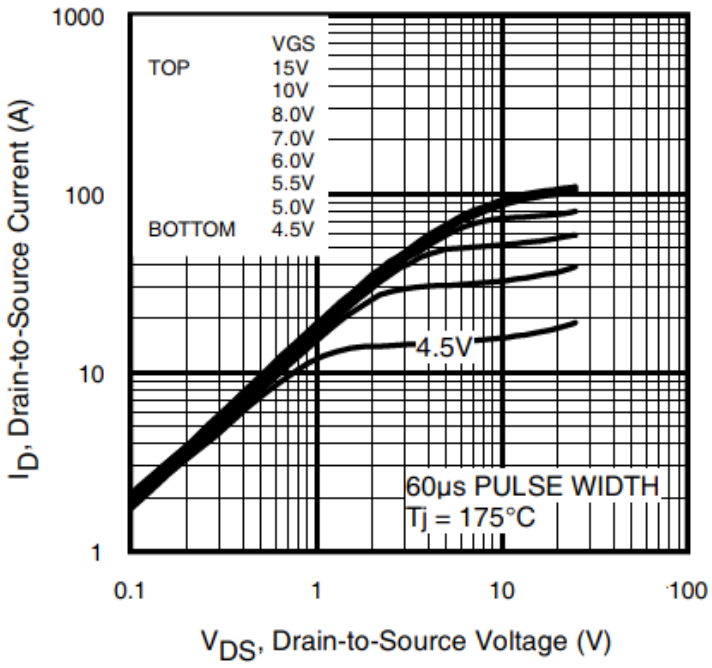

Fig. 2 Typical Output Characteristics

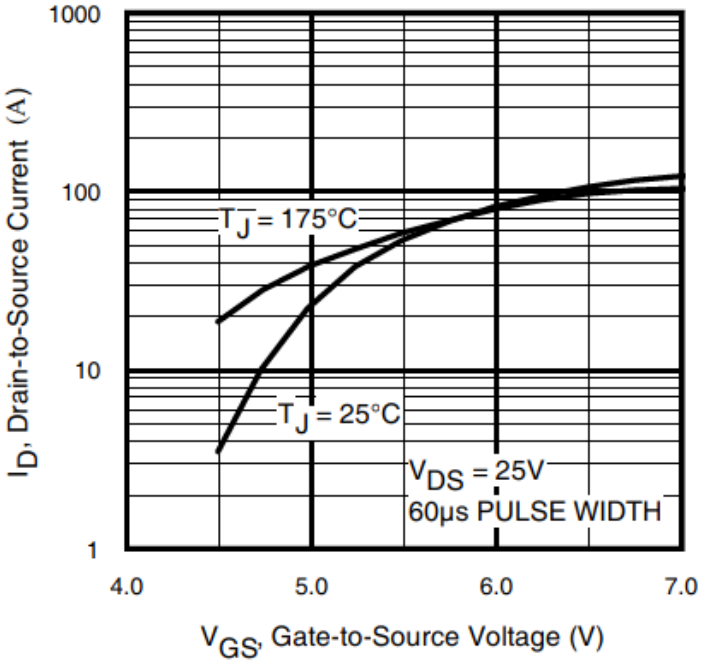

Fig. 3 Typical Transfer Characteristics

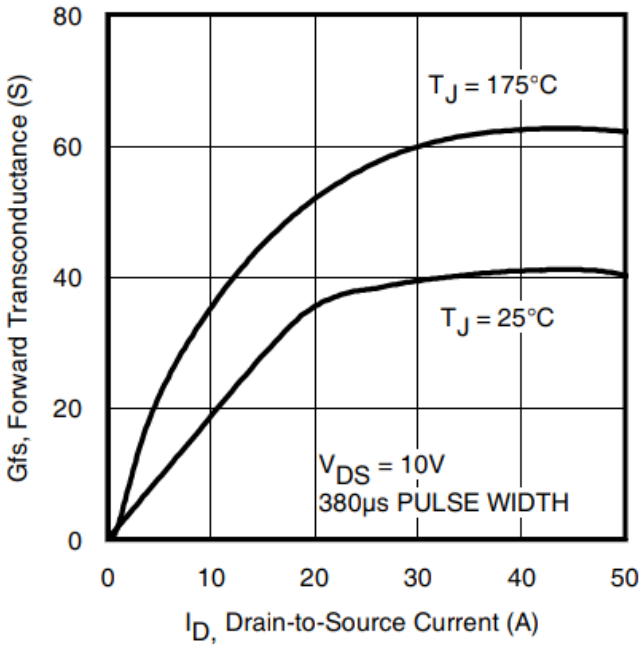

Fig. 4 Typical Forward Transconductance vs. Drain Current

Downloaded from Arrow.com.

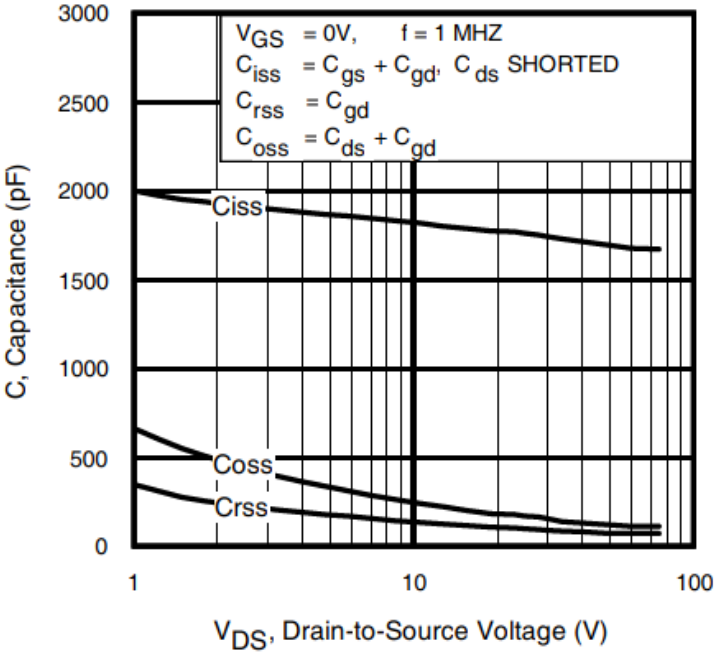

Fig 5. Typical Capacitance vs. Drain-to-Source Voltage

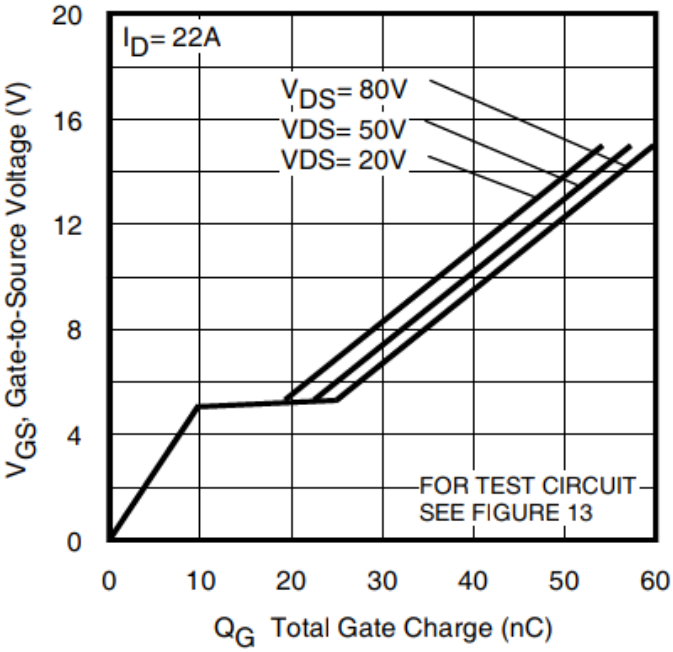

Fig 6. Typical Gate Charge vs. Gate-to-Source Voltage

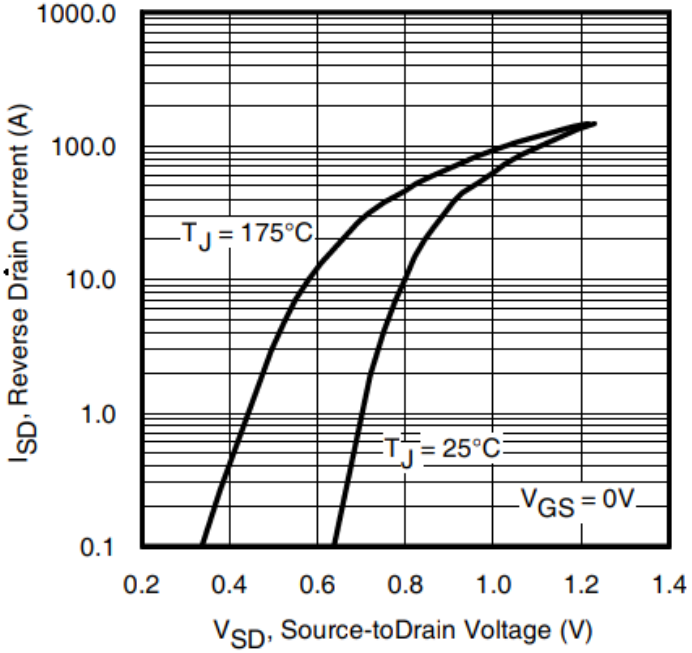

Fig. 7 Typical Source-to-Drain Diode Forward Voltage

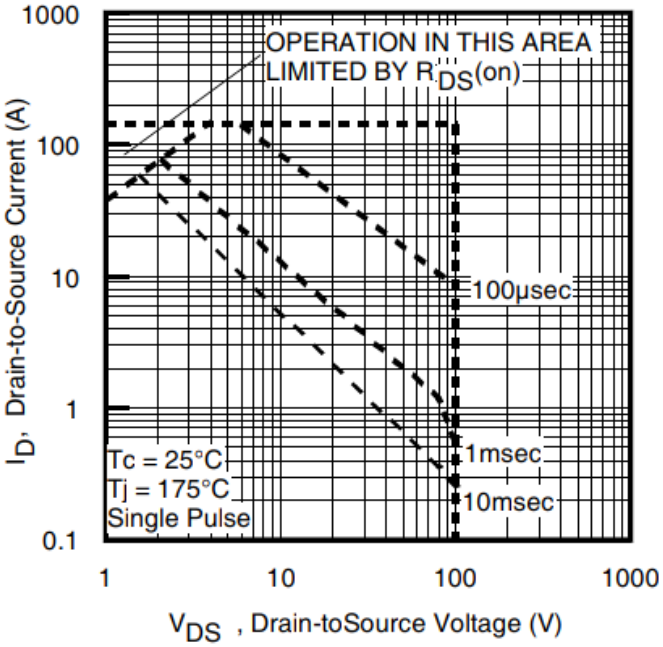

Fig 8. Maximum Safe Operating Area

Downloaded from Arrow.com.

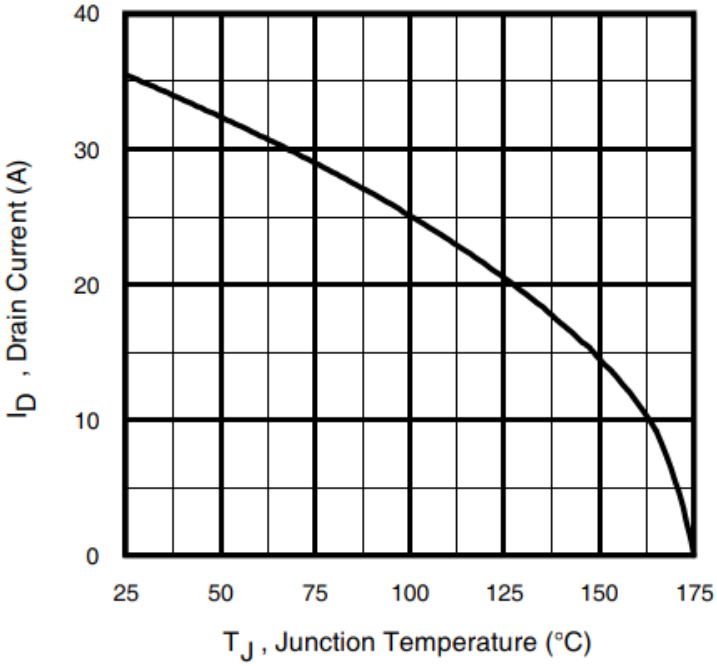

Fig 9. Maximum Drain Current vs. Case Temperature

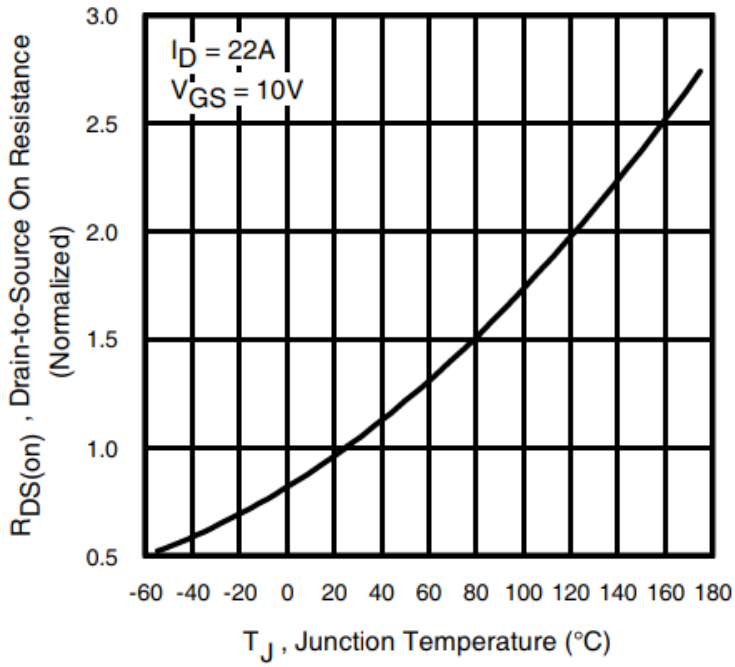

Fig 10. Normalized On-Resistance vs. Temperature

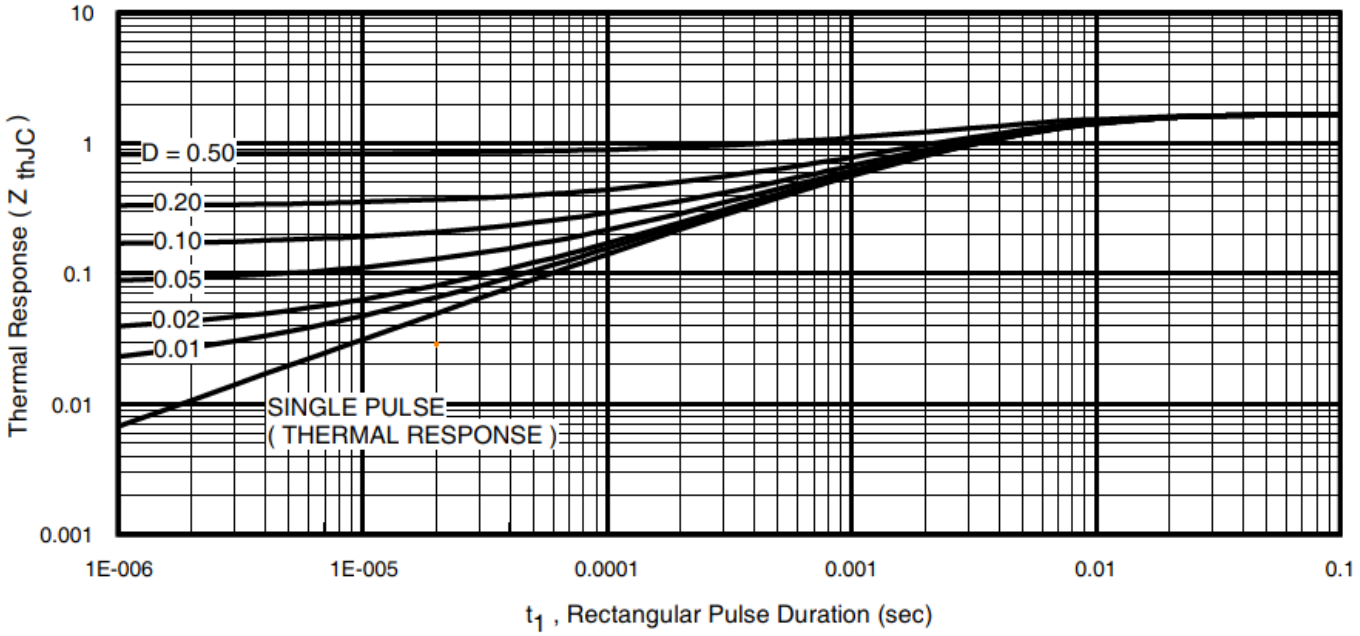

Fig 11. Maximum Effective Transient Thermal Impedance, Junction-to-Case

Downloaded from Arrow.com.

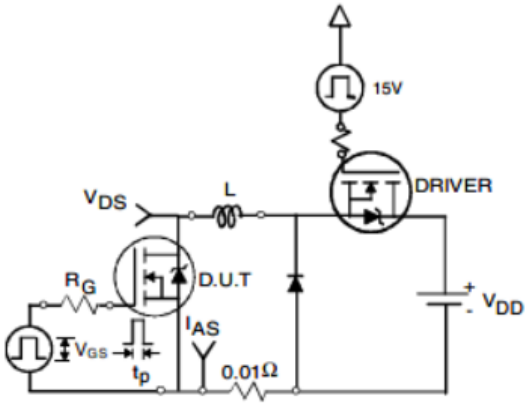

Fig. 12a. Unclamped Inductive Test Circuit

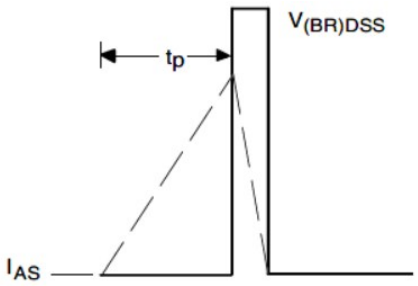

Fig. 12b. Unclamped Inductive Waveforms

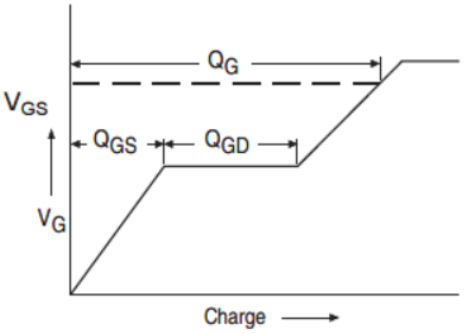

Fig 13a. Basic Gate Charge Waveform

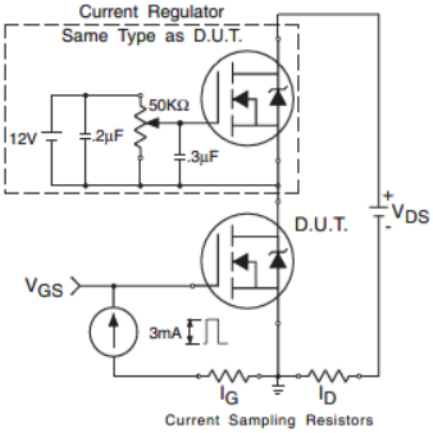

Fig 13b. Gate Charge Test Circuit

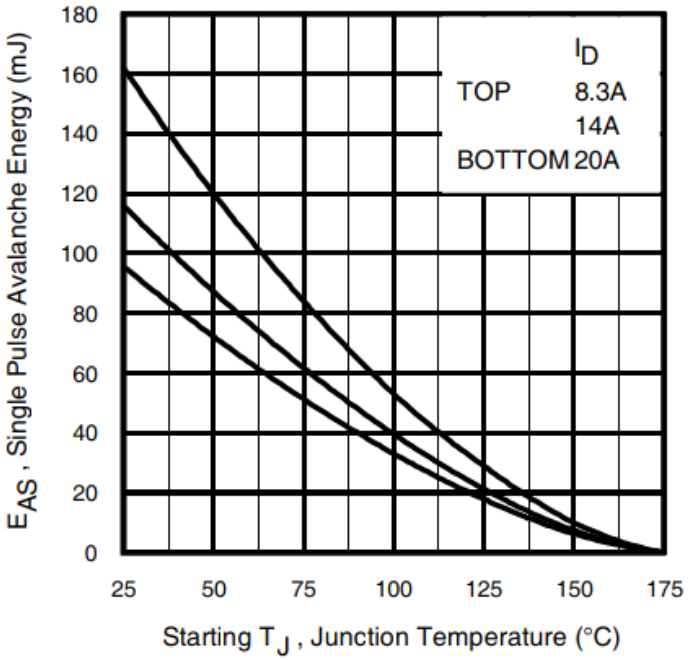

Fig 12c. Maximum Avalanche Energy vs. Drain Current

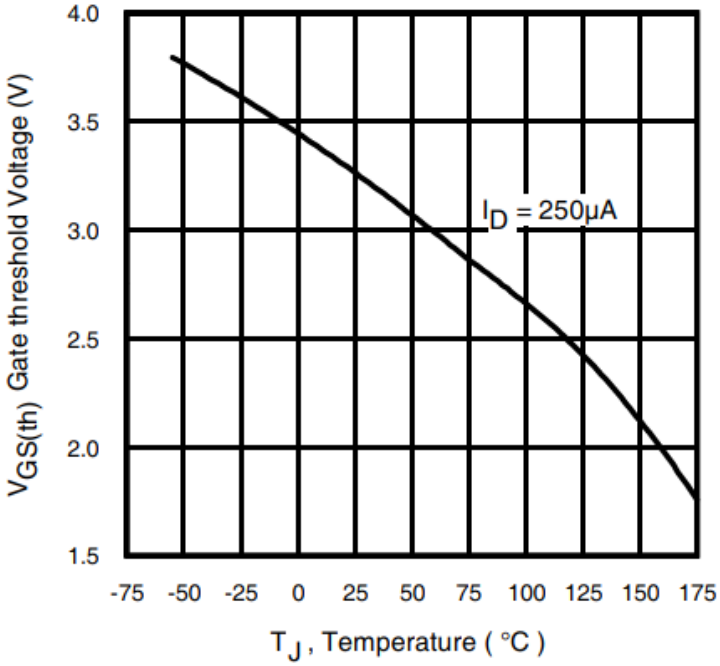

Fig. 14 Threshold Voltage vs. Temperature

Downloaded from Arrow.com.

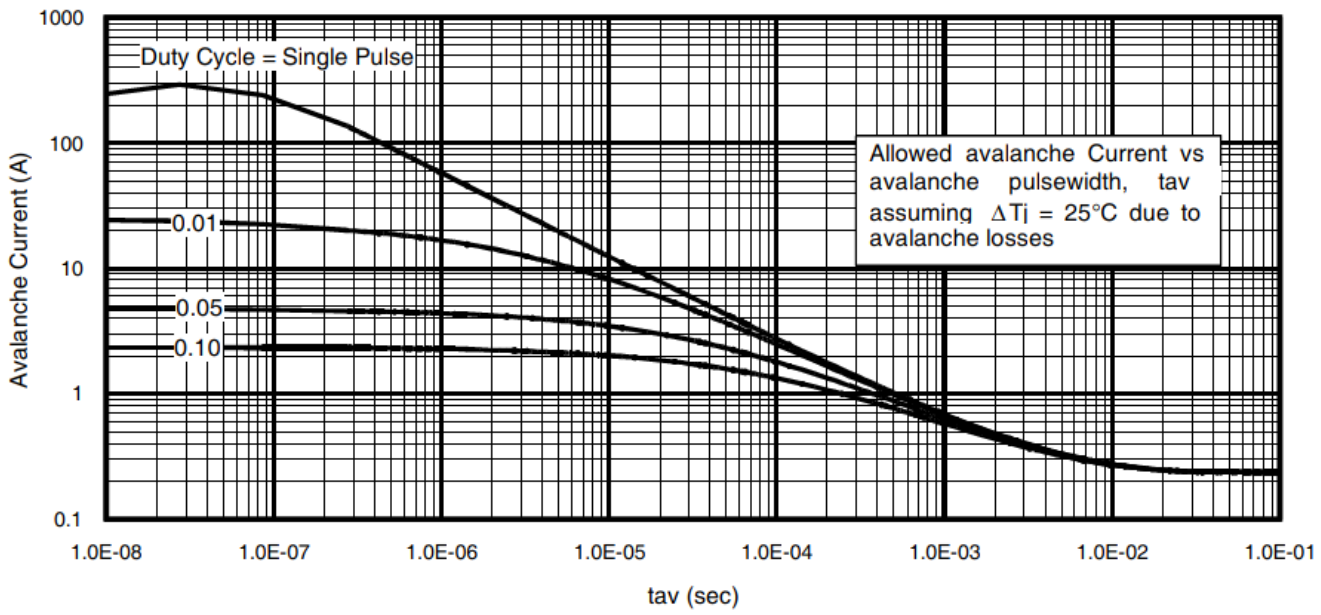

Fig 15. Typical Avalanche Current vs. Pulse Width

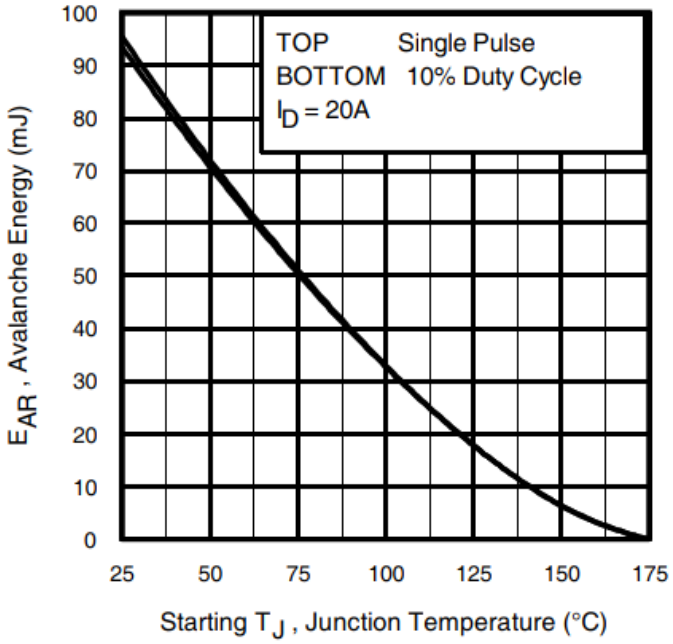

Fig 16. Maximum Avalanche Energy vs. Temperature

Notes on Repetitive Avalanche Curves , Figures 15, 16:
(For further info, see AN-1005 at www.irf.com)

1.Avalanche failures assumption:
Purely a thermal phenomenon and failure occurs at a temperature far in excess of T_{jmax}. This is validated for every part type.

2. Safe operation in Avalanche is allowed as long asT_{jmax} is not exceeded.

3. Equation below based on circuit and waveforms shown in Figures 23a, 23b.

4. $P_{D\ (ave)}$ = Average power dissipation per single avalanche pulse.

5. BV = Rated breakdown voltage (1.3 factor accounts for voltage increase during avalanche).

6. I_{av} = Allowable avalanche current.

7. ΔT = Allowable rise in junction temperature, not to exceed T_{jmax} (assumed as 25°C in Figure 14, 15).

t_{av} = Average time in avalanche.

D = Duty cycle in avalanche = tav ·f

$Z_{thJC}(D, t_{av})$ = Transient thermal resistance, see Figures 14)

$$PD\ (ave) = 1/2\ (1.3 \cdot BV \cdot I_{av}) = \Delta T / Z_{thJC}$$

$$I_{av} = 2\Delta T / [1.3 \cdot BV \cdot Z_{th}]$$

$$E_{AS\ (AR)} = P_{D\ (ave)} \cdot t_{av}$$

Downloaded from Arrow.com.

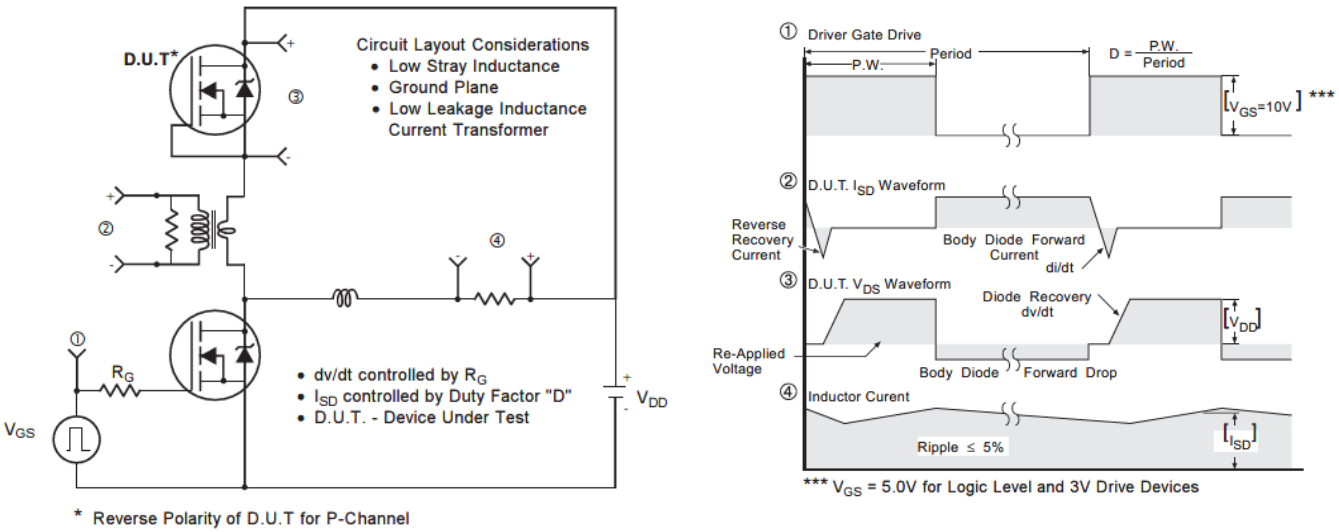

Fig 17. Peak Diode Recovery dv/dt Test Circuit for N-Channel HEXFET® Power MOSFETs

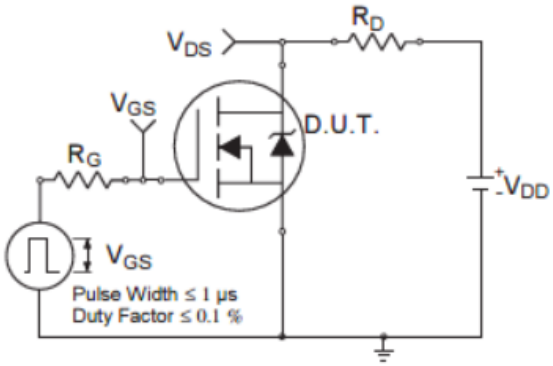

Fig 18a. Switching Time Test Circuit

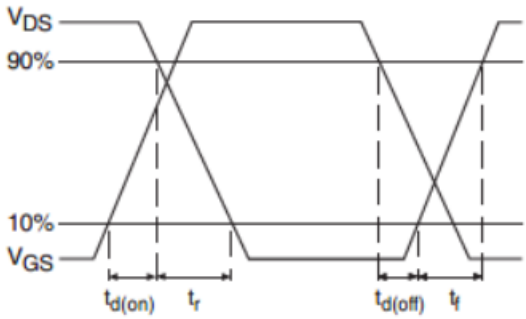

Fig 18b. Switching Time Waveforms

Downloaded from Arrow.com.

TO-220 Package Outline (Dimensions are shown in millimeters (inches))

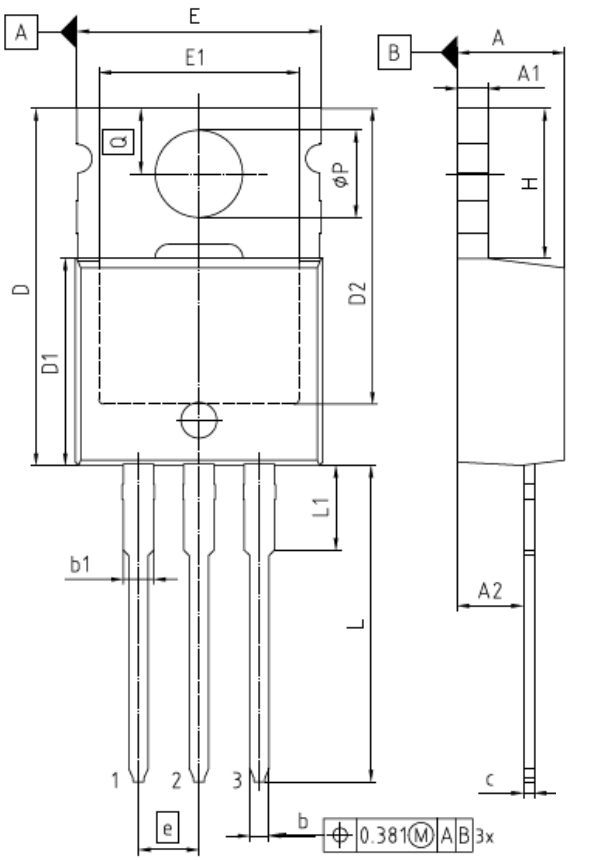

NOTES:
DIMENSIONS DO NOT INCLUDE MOLD FLASH, PROTRUSION OR GATE BURRS
GATE BURRS ARE LESS THAN 0.5 mm

PACKAGE - GROUP NUMBER:	PG-TO220-3-U05	
DIMENSIONS	MILLIMETERS	
	MIN.	MAX.
A	3.56	4.83
A1	1.14	1.40
A2	2.03	2.92
b	0.38	1.01
b1	1.14	1.78
c	0.36	0.61
D	14.22	16.51
D1	8.38	9.20
D2	11.68	12.88
E	9.65	10.67
E1	6.86	8.89
e	2.54	
N	3	
H	5.84	6.86
L	12.70	14.73
L1	3.56	4.06
øP	3.54	4.08
Q	2.54	3.42

TO-220 Part Marking Information

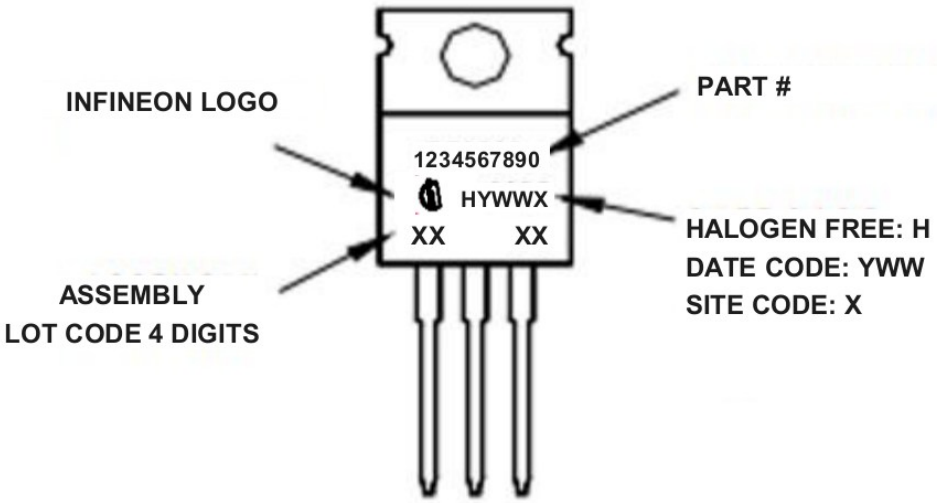

TO-220 packages are not recommended for Surface Mount Application.

Downloaded from Arrow.com.

D^2 Pak (TO-263AB) Package Outline (Dimensions are shown in millimeters (inches))

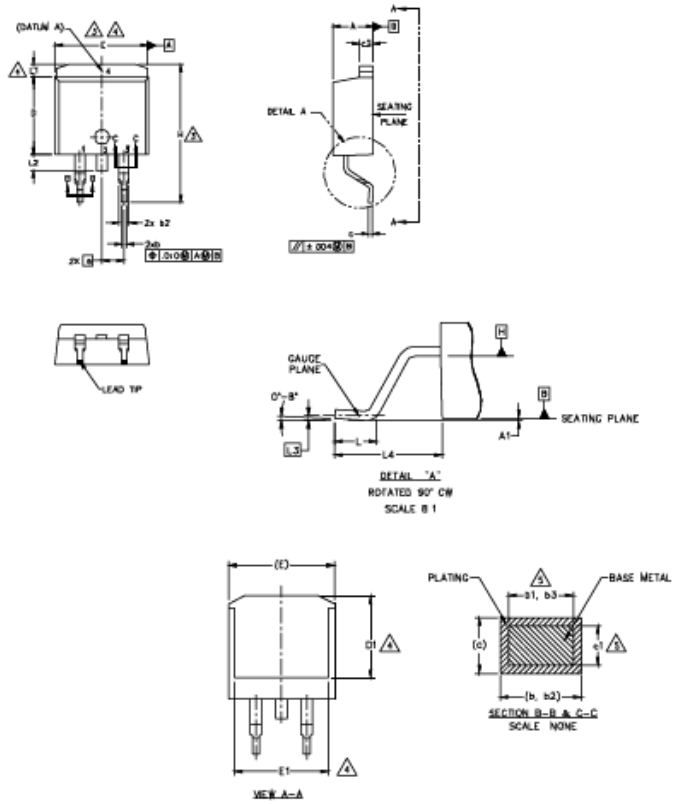

SYMBOL	DIMENSIONS				NOTES
	MILLIMETERS		INCHES		
	MIN.	MAX.	MIN.	MAX.	
A	4.06	4.83	.160	.190	
A1	0.00	0.254	.000	.010	
b	0.51	0.99	.020	.039	
b1	0.51	0.89	.020	.035	5
b2	1.14	1.78	.045	.070	
b3	1.14	1.73	.045	.068	5
c	0.38	0.74	.015	.029	
c1	0.38	0.58	.015	.023	5
c2	1.14	1.65	.045	.065	
D	8.38	9.65	.330	.380	3
D1	6.86	–	.270		4
E	9.65	10.67	.380	.420	3,4
E1	6.22	–	.245		4
e	2.54 BSC		.100 BSC		
H	14.61	15.88	.575	.625	
L	1.78	2.79	.070	.110	
L1	–	1.65	–	.066	4
L2	–	1.78	–	.070	
L3	0.25 BSC		.010 BSC		
L4	4.78	5.28	.188	.208	

NOTES

1. DIMENSIONING AND TOLERANCING PER ASME Y14.5M-1994
2. DIMENSIONS ARE SHOWN IN MILLIMETERS [INCHES].
3. DIMENSION D & E DO NOT INCLUDE MOLD FLASH. MOLD FLASH SHALL NOT EXCEED 0.127 [.005"] PER SIDE. THESE DIMENSIONS ARE MEASURED AT THE OUTMOST EXTREMES OF THE PLASTIC BODY AT DATUM H.
4. THERMAL PAD CONTOUR OPTIONAL WITHIN DIMENSION E, L1, D1 & E1
5. DIMENSION b1 AND c1 APPLY TO BASE METAL ONLY
6. DATUM A & B TO BE DETERMINED AT DATUM PLANE H.
7. CONTROLLING DIMENSION : INCH.
8. OUTLINE CONFORMS TO JEDEC OUTLINE TO-263AB.

LEAD ASSIGNMENTS

DIODES

1.- ANODE (TWO DIE) / OPEN (ONE DIE)
2, 4.- CATHODE
3.- ANODE

HEXFET

1.- GATE
2, 4 - DRAIN
3.- SOURCE

IGBTs, CoPACK

1.- GATE
2, 4.- COLLECTOR
3.- EMITTER

D^2 Pak (TO-263AB) Part Marking Information

EXAMPLE: THIS IS AN IRF530S WITH
LOT CODE 8024
ASSEMBLED ON WW 02, 2000
IN THE ASSEMBLY LINE "L"

Note: "P" in assembly line position indicates "Lead – Free"

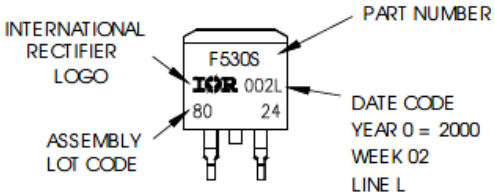

OR

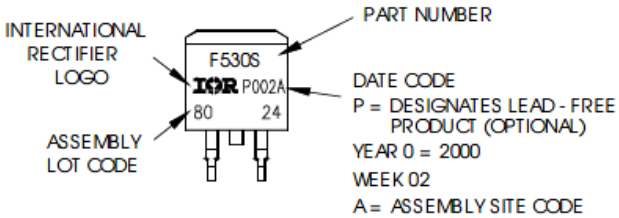

Downloaded from Arrow.com.

TO-262 Package Outline (Dimensions are shown in millimeters (inches))

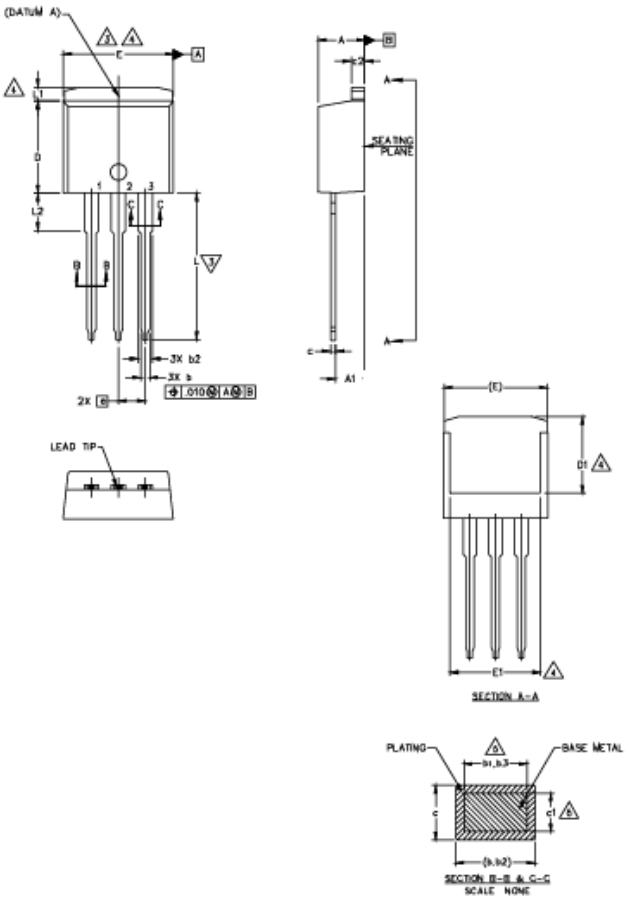

NOTES

1. DIMENSIONING AND TOLERANCING PER ASME Y14.5M-1994
2. DIMENSIONS ARE SHOWN IN MILLIMETERS [INCHES].
3. DIMENSION D & E DO NOT INCLUDE MOLD FLASH. MOLD FLASH SHALL NOT EXCEED 0.127 [.005"] PER SIDE. THESE DIMENSIONS ARE MEASURED AT THE OUTMOST EXTREMES OF THE PLASTIC BODY.
4. THERMAL PAD CONTOUR OPTIONAL WITHIN DIMENSION E, L1, D1 & E1.
5. DIMENSION b1 AND c1 APPLY TO BASE METAL ONLY.
6. CONTROLLING DIMENSION : INCH.
7.- OUTLINE CONFORM TO JEDEC TO-262 EXCEPT A1(max.), b(min.) AND D1(min.) WHERE DIMENSIONS DERIVED THE ACTUAL PACKAGE OUTLINE.

SYMBOL	DIMENSIONS				NOTES
	MILLIMETERS		INCHES		
	MIN.	MAX.	MIN.	MAX.	
A	4.06	4.83	.160	.190	
A1	2.03	3.02	.080	.119	
b	0.51	0.99	.020	.039	
b1	0.51	0.89	.020	.035	5
b2	1.14	1.78	.045	.070	
b3	1.14	1.73	.045	.068	5
c	0.38	0.74	.015	.029	
c1	0.38	0.58	.015	.023	5
c2	1.14	1.65	.045	.065	
D	8.38	9.65	.330	.380	3
D1	6.86	–	.270	–	4
E	9.65	10.67	.380	.420	3,4
E1	6.22	–	.245		4
e	2.54 BSC		.100 BSC		
L	13.46	14.10	.530	.555	
L1	–	1.65	–	.065	4
L2	3.56	3.71	.140	.146	

LEAD ASSIGNMENTS

HEXFET

1.- GATE
2.- DRAIN
3.- SOURCE
4.- DRAIN

IGBTs, CoPACK

1.- GATE
2.- COLLECTOR
3.- EMITTER
4.- COLLECTOR

TO-262 Part Marking Information

EXAMPLE: THIS IS AN IRL3103L
LOT CODE 1789
ASSEMBLED ON WW 19, 1997
IN THE ASSEMBLY LINE "C"

Note: "P" in assembly line position indicates "Lead – Free"

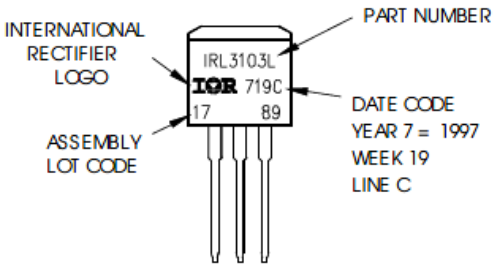

OR

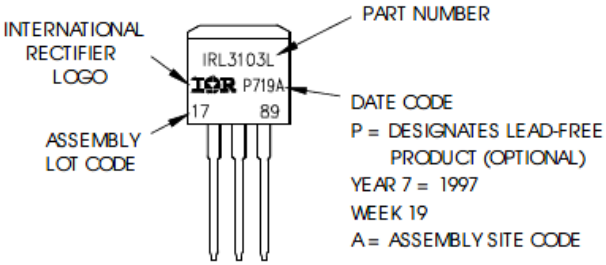

Downloaded from Arrow.com.

D² Pak (TO-263AB) Tape & Reel Information (Dimensions are shown in millimeters (inches))

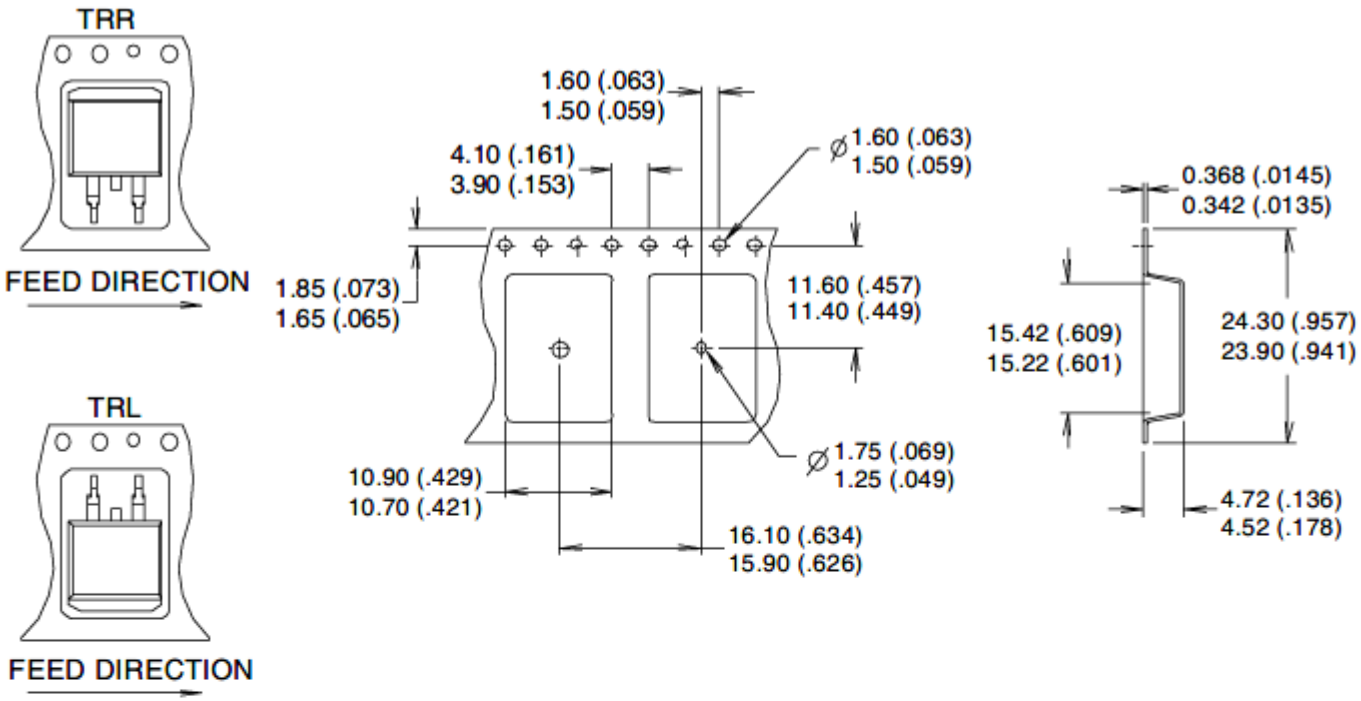

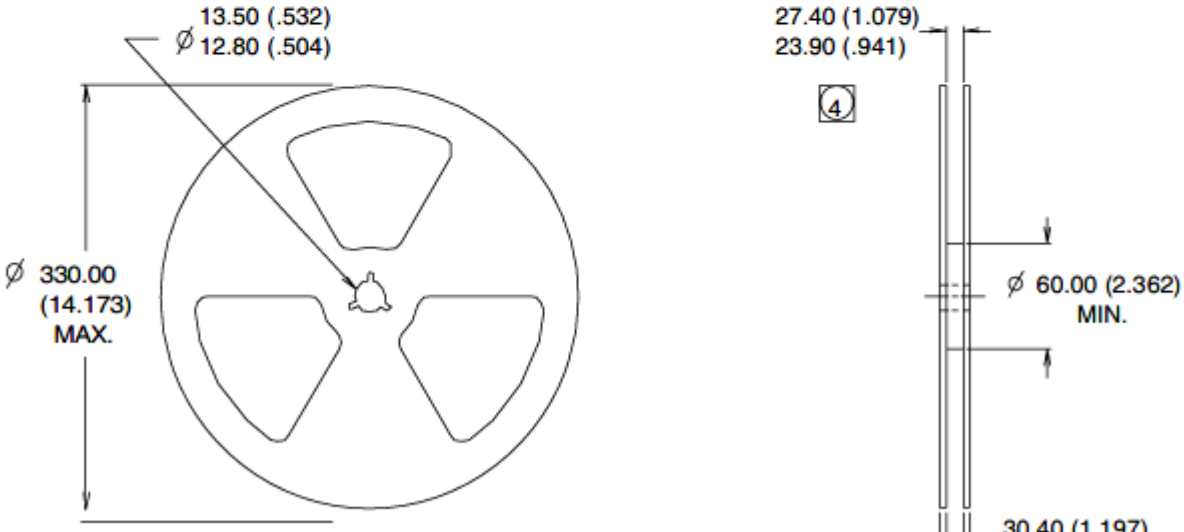

NOTES :
1. COMFORMS TO EIA-418.
2. CONTROLLING DIMENSION: MILLIMETER.
3. DIMENSION MEASURED @ HUB.
4. INCLUDES FLANGE DISTORTION @ OUTER EDGE.

Downloaded from Arrow.com.

Revision History

Date	Rev.	Comments
2026-07-24	2.1	• Update datasheet to Infineon format • Updated Package Outline and Part marking –page 8 • Added disclaimer on last page.

Trademarks

All referenced product or service names and trademarks are the property of their respective owners.

Published by Infineon Technologies AG, Am Campeon 1-15, 85579 Neubiberg, Germany
Copyright (c) 2026 Infineon Technologies AG and its affiliates. All Rights Reserved.

Important notice

The product is not developed and released for series supply by Infineon.

Subject to the development and release of the product for series supply by Infineon, the technical specifications of the product are set forth in the relevant final product data sheet provided by Infineon.

Infineon reserves the right to change all information given in this document at any time without notice.

Products which may also include samples and may be comprised of hardware or software or both ("Product(s)") are sold or provided and delivered by Infineon Technologies AG and its affiliates ("Infineon") subject to the terms and conditions of the frame supply contract or other written agreement(s) executed by a customer and Infineon or, in the absence of the foregoing, the applicable Sales Conditions of Infineon. General terms and conditions of a customer or deviations from applicable Sales Conditions of Infineon shall only be binding for Infineon if and to the extent Infineon has given its express written consent.

For the avoidance of doubt, Infineon disclaims all warranties of non-infringement of third-party rights and implied warranties such as warranties of fitness for a specific use/purpose or merchantability.

Infineon shall not be responsible for any information with respect to samples, the application or customer's specific use of any Product or for any examples or typical values given in this document.

The data contained in this document is exclusively intended for technically qualified and skilled customer representatives. It is the responsibility of the customer to evaluate the suitability of the Product for the intended application and the customer's specific use and to verify all relevant technical data contained in this document in the intended application and the customer's specific use. The customer is responsible for properly designing, programming, and testing the functionality and safety of the intended application, as well as complying with any legal requirements related to its use.

Unless otherwise explicitly approved by Infineon, Products may not be used in any application where a failure of the Products or any consequences of the use thereof can reasonably be expected to result in personal injury. However, the foregoing shall not

prevent the customer from using any Product in such fields of use that Infineon has explicitly designed and sold it for, provided that the overall responsibility for the application lies with the customer.

Infineon expressly reserves the right to use its content for commercial text and data mining (TDM) according to applicable laws, e.g. Section 44b of the German Copyright Act (UrhG).

If the Product includes security features: Because no computing device can be absolutely secure, and despite security measures implemented in the Product, Infineon does not guarantee that the Product will be free from intrusion, data theft or loss, or other breaches ("Security Breaches"), and Infineon shall have no liability arising out of any Security Breaches.

If this document includes or references software:

The software is owned by Infineon under the intellectual property laws and treaties of the United States, Germany, and other countries worldwide. All rights reserved. Therefore, you may use the software only as provided in the software license agreement accompanying the software. If no software license agreement applies, Infineon hereby grants you a personal, non-exclusive, non-transferable license (without the right to sublicense) under its intellectual property rights in the software (a) for software provided in source code form, to modify and reproduce the software solely for use with Infineon hardware products, only internally within your organization, and (b) to distribute the software in binary code form externally to end users, solely for use on Infineon hardware products. Any other use, reproduction, modification, translation, or compilation of the software is prohibited.

For further information on the Product, technology, delivery terms and conditions, and prices, please contact your nearest Infineon office or visit https://www.infineon.com.

Downloaded from Arrow.com.