TOSHIBA Bi-CD Integrated Circuit Silicon Monolithic

TB6633AFNG

3-Phase Full-Wave PWM Driver for Sensorless DC Motors

The TB6633AFNG is a three-phase full-wave PWM driver for sensorless brushless DC (BLDC) motors. It controls motor rotation speed by changing the PWM duty cycle, based on the voltage of an analog control input.

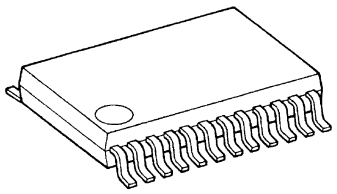

SSOP24-P-300-0.65A

Weight: 0.136 g (typ.)

Features

- Sensorless drive in three-phase full-wave mode
- PWM chopper control
- Controls the PWM duty cycle based on an analog input (7-bit ADC)
- Output current: I_{OUT} = 0.6 A typ. (1 A max)
- Power supply: VM = 4.5 V to 22 V (25 V max)
- Forward and reverse rotation
- Lead angle control (0°, 15° and 30°)
- Overlapping commutation (120°, 135° and 150°)
- Selectable duty cycle modulation period upon state transitions of phase signals
- Rotation speed detecting signal (FG_OUT)
  TB6633FNG:3 pulses per electrical degree
  TB6633AFNG:1 pulses per electrical degree
- Adjustable startup settings
- Forced commutation frequency control (f_{osc} / (6×2^{17}), f_{osc} / (6×2^{18}) and f_{osc} / (6×2^{19}))
- Selectable PWM frequency
- Restart feature
- Overcurrent protection (ISD)
- Thermal shutdown (TSD)
- Undervoltage lockout (LVD)
- Current limiter
- Short brake control

Note : 8 pin (IR) of this product is sensitive to electrostatic discharge. When handling this product, protect the environment to avoid electrostatic discharge.

Downloaded from Arrow.com.

Pin Assignment

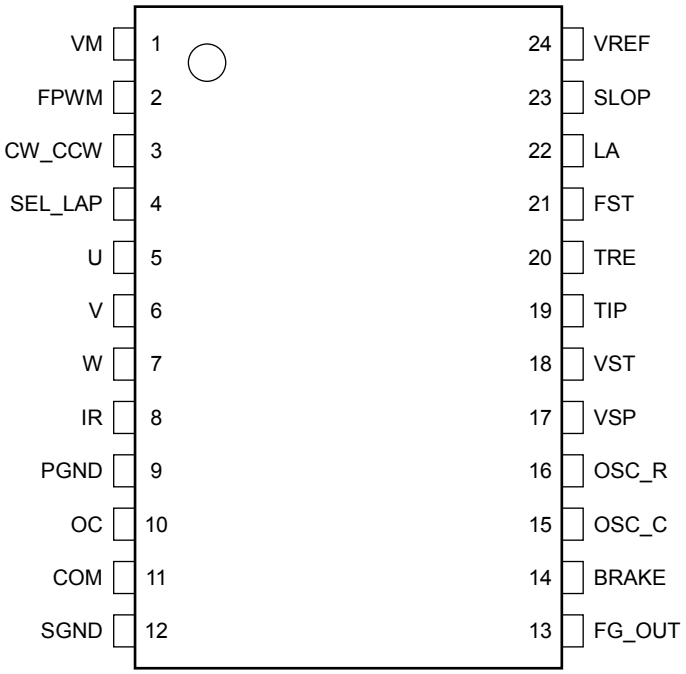

Downloaded from Arrow.com.

Pin Description

Pin No.	Symbol	I/O	Description
1	VM	—	Motor power supply pin
2	FPWM	I	PWM frequency (f_{PWM}) select input (This pin has a pull-down resistor.) High : $f_{PWM} \simeq f_{osc} / 128$ Example) $f_{PWM} \simeq 40$ kHz @ $f_{osc} = 5.1$ MHz Low, Open : $f_{PWM} \simeq f_{osc} / 256$ Example) $f_{PWM} \simeq 20$ kHz @ $f_{osc} = 5.1$ MHz
3	CW_CCW	I	Rotation direction select input (This pin has a pull-down resistor.) High: Counterclockwise (U → W → V) Low, Open: Clockwise (U → V → W)
4	SEL_LAP	I	Overlapping commutation select pin (This pin has a pull-down resistor.) High : Overlapping commutation Low, Open : 120° commutation
5	U	O	U-phase output
6	V	O	V-phase output
7	W	O	W-phase output
8	IR	—	Connection pin for an output shunt resistor
9	PGND	—	Power ground pin
10	OC	I	Overcurrent detection input (This pin has a pull-down resistor.) All PWM output signals are stopped when OC ≥ 0.25 V (typ.).
11	COM	I	Connection pin for the center tap of the motor
12	SGND	—	Signal ground pin
13	FG_OUT	O	Rotation speed output pin (open-drain) This output is held low at startup and when an abnormality is detected. In sensorless mode, pulses are generated at 1ppr according to the back-EMF. Note: 1ppr = 1 pulses per electrical degree (With a four-pole motor, two pulses are generated per revolution.)
14	BRAKE	I	Short brake control pin (This pin has a pull-down resistor.) High : Short brake Low, Open : Normal operation
15	OSC_C	—	OSC_C: Connection pin for the oscillator capacitor OSC_R: Connection pin for the oscillator resistor Example: Internal oscillating frequency (f_{osc}) ≃ 5.1 MHz (typ.) when OSC_C = 68 pF and OSC_R = 20 kΩ.
16	OSC_R	—	
17	VSP	I	Motor speed control input (This pin has a pull-down resistor.) 0 ≤ VSP ≤ V_{AD} (L); 1 V (typ.) : Output OFF V_{AD} (L) ≤ VSP ≤ V_{AD} (H); 4 V (typ.) : Sets the PWM duty cycle based on the analog input. V_{AD} (H) ≤ VSP ≤ VREF : 100 % duty cycle (127 / 128)
18	VST	—	Duty cycle setting pin for DC excitation and forced commutation modes 0 ≤ VST ≤ V_{AD} (L); 1 V (typ.) : 0 % duty cycle V_{AD} (L) ≤ VST ≤ V_{AD} (H); 4 V (typ.) : Sets the PWM duty cycle based on the analog input. V_{AD} (H) ≤ VST ≤ VREF : 100 % duty cycle (127 / 128)
19	TIP	—	Connection pin for a capacitor to set the DC excitation time
20	TRE	—	Connection pin for a capacitor to set the restart time upon abnormality detection
21	FST	I	Forced commutation frequency select input (This pin has a pull-down resistor.) Forced commutation frequency (f_{ST}): cycles per second equivalent to an electrical degree FST = High = $f_{ST} \simeq f_{osc} / (6 \times 2^{17})$ Example) $f_{ST} \simeq 6.4$ Hz @ $f_{osc} = 5.1$ MHz FST = Middle = $f_{ST} \simeq f_{osc} / (6 \times 2^{18})$ Example) $f_{ST} \simeq 3.2$ Hz @ $f_{osc} = 5.1$ MHz FST = Low, Open = $f_{ST} \simeq f_{osc} / (6 \times 2^{19})$ Example) $f_{ST} \simeq 1.6$ Hz @ $f_{osc} = 5.1$ MHz
22	LA	I	Lead angle select input (This pin has a pull-down resistor.) LA = High ≃ 30° lead angle LA = Middle ≃ 15° lead angle LA = Low, Open ≃ 0° lead angle
23	SLOP	I	Modulation scheme select input for phase signal state transitions (This pin has a pull-down resistor.) SLOP = High ≃ modulation SLOP = Middle ≃ test mode SLOP = Low, Open ≃ No modulation
24	VREF	—	Reference voltage output; VREF = 5 V (typ.)

Downloaded from Arrow.com.

Functional Description

The equivalent circuit diagrams may be simplified or some parts of them may be omitted for explanatory purposes.

Timing charts may be simplified for explanatory purposes.

1. Sensorless Drive Mode

Based on the analog voltage input at the VSP pin for a startup operation, the rotor is aligned to a known position in DC excitation mode. Then, the forced commutation signal is generated to start the motor rotation. As the motor rotates, the back-EMF occurs in each phase of the coil. When an input signal indicating the polarity of three phase voltage of the motor, including the back-EMF, is detected as a position signal, the motor driving signal is automatically switched from forced commutation signal to the normal commutation PWM signal that is based on the position signal input (back-EMF). Then, a BLDC motor starts running in sensorless commutation mode.

2. Startup Operation

At startup, no induced voltage is generated due to the stationary motor, and the rotor position cannot be detected in sensorless mode. Therefore, the TB6633AFNG rotor is first aligned to a known position in DC excitation mode for an appropriate period of time, and then the motor is started in forced commutation mode.

The DC excitation time is determined via the TIP pin. The forced commutation frequency is determined via the FST pin. The duty cycles for DC excitation and forced commutation modes are determined by the VST voltage. For sensorless mode, the PWM duty cycle is determined by the VSP value. A speed-control voltage should be applied to the VSP pin to start and stop the motor operation, and to control the motor speed. Since the time settings and startup torques (output duty cycle) for DC excitation and forced commutation vary depending on the motor type and load, they should be adjusted experimentally.

1) DC Excitation Mode

The DC excitation time is determined via the TIP pin.

DC excitation time: $T_2 = C_2 \times$ TIP pin voltage / TIP pin charge current

$C_2 = 0.1\ \mu F$, $T_2 = 0.1\ \mu F \times 3$ V (typ.) / 3 μA (typ.) = 0.1 s

2) Forced Commutation Mode

The forced commutation frequency is determined via the FST pin.

(The FST pin has a pull-down resistor.)

FST = High = Forced commutation frequency $f_{ST} \simeq f_{osc} / (6 \times 2^{17})$

FST = Middle = Forced commutation frequency $f_{ST} \simeq f_{osc} / (6 \times 2^{18})$

FST = Low, Open = Forced commutation frequency $f_{ST} \simeq f_{osc} / (6 \times 2^{19})$

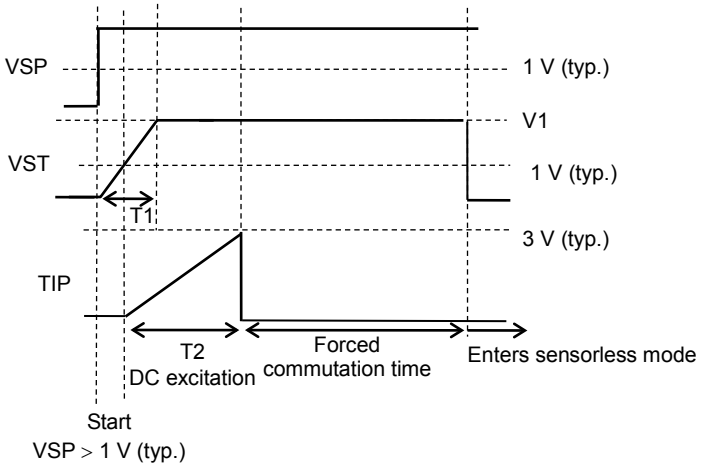

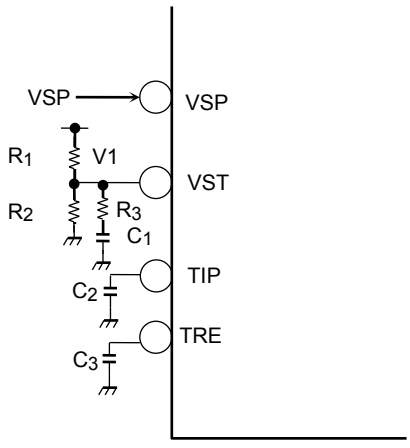

Downloaded from Arrow.com.

3) Timing Diagram of the Startup Operation (CW_CCW = Low: Clockwise rotation)

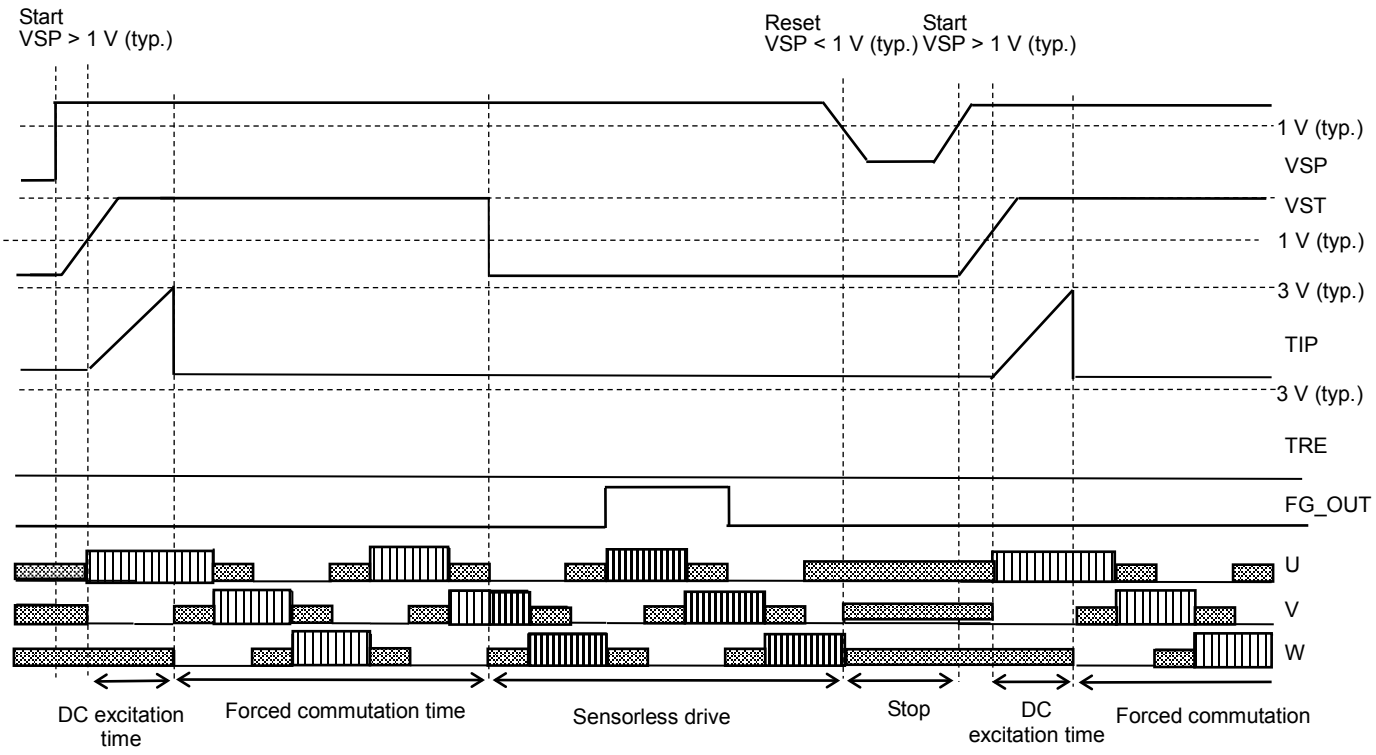

Output duty cycle determined by the VSP voltage

Output duty cycle determined by the VST voltage

OFF (High impedance)

Downloaded from Arrow.com.

3. Restart Operation

When any abnormality is detected, output signals are turned off (high impedance) during the operation restart time.

The following events are detected as abnormalities:

1. The forced commutation time exceeds eight electrical-degree period.
2. The ISD circuit is activated.
3. The TSD circuit is activated.
4. The rotation speed falls below the forced commutation frequency for sensorless mode.
5. The short brake mode is exited.
6. The input is switched at CW_CCW pin for sensorless mode.
7. Maximum commutation frequency (FMAX)

FST = High = FMAX = f_{osc} / (6 × 2^{11}) Example) FMAX = 400Hz per electrical degree @ f_{osc} = 5.1 MHz
FST = Middle = FMAX = f_{osc} / (6 × 2^{11}) Example) FMAX = 400Hz per electrical degree @ f_{osc} = 5.1 MHz
FST = Low = FMAX = f_{osc} / (6 × 2^{12}) Example) FMAX = 200Hz per electrical degree @ f_{osc} = 5.1 MHz

The restart time is determined via the TRE pin as follows:

Restart time: T_1 = C_3 × TRE pin voltage / TRE pin charge current
C_3 = 1 μF, T_1 = 1 μF × 3 V (typ.) / 3 μA (typ.) = 1 s (typ.)

For example, when the motor does not rotate due to motor locking or when a mode transition from forced commutation mode to sensorless mode does not properly occur, the TB6633AFNG begins cycling into the following operation:

Operation start when VSP >1 V (typ.) → DC excitation time → Forced commutation time of eight electrical-degree period → Restart time → DC excitation time…

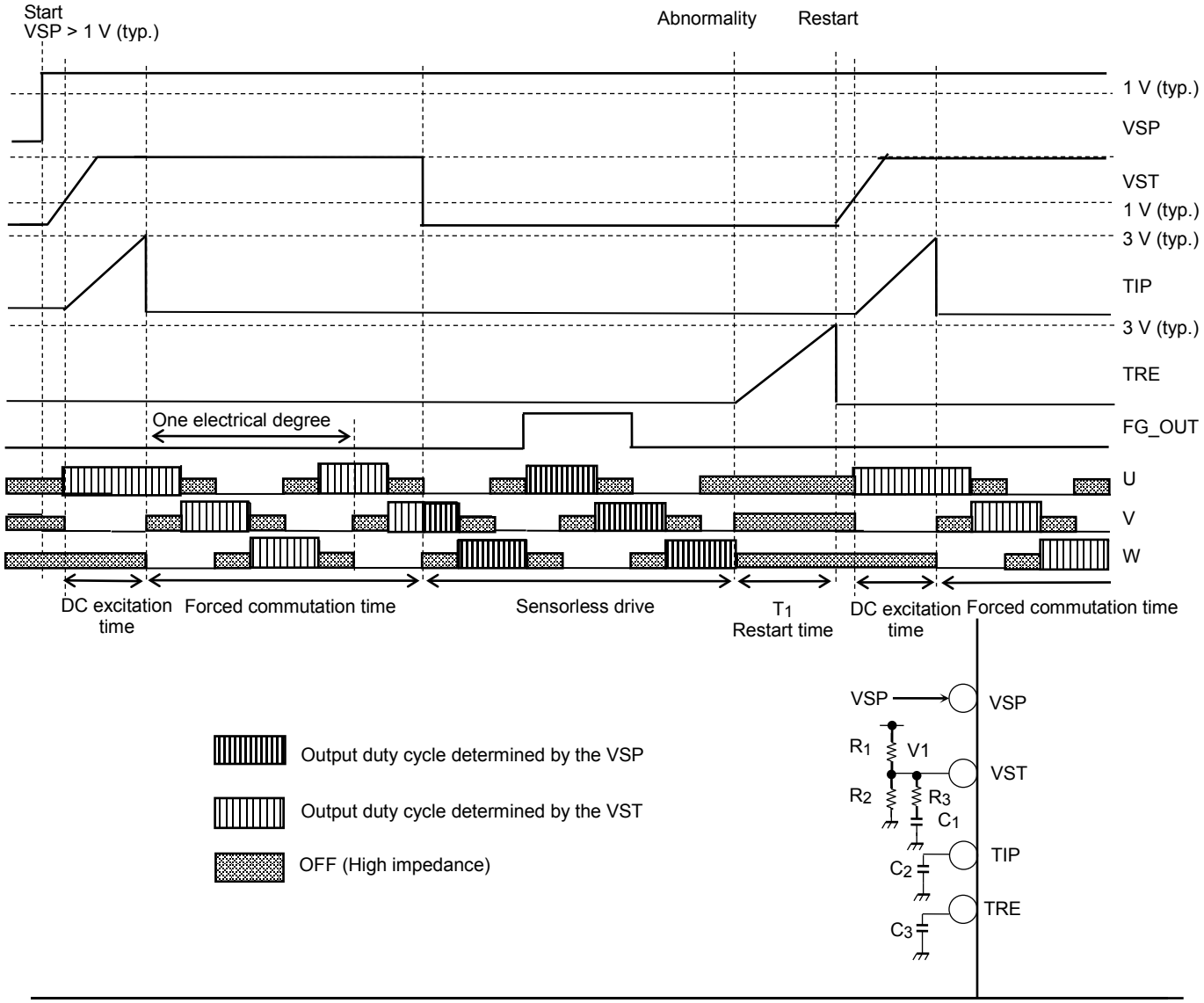

Downloaded from Arrow.com.

Absolute Maximum Ratings (Note) (Ta = 25°C)

Characteristics	Symbol	Rating	Unit
Power supply voltage	VM	25	V
Input voltage	V_{IN1} (Note 1)	−0.3 to 6.0	V
	V_{IN2} (Note 2)	−0.3 to 25	V
Output voltage	V_{OUT1} (Note 3)	25	V
	V_{OUT2} (Note 4)	6.0	V
Output current	I_{OUT1} (Note 5)	1 (Note 8)	A
	I_{OUT2} (Note 6)	5	mA
	I_{OUT3} (Note 7)	5	mA
Power dissipation	P_D	0.78 (Note 9)	W
Operating temperature	T_{opr}	−40 to 85	°C
Storage temperature	T_{stg}	−55 to 150	°C

Note: The absolute maximum ratings of a semiconductor device are a set of ratings that must not be exceeded, even for a moment. Do not exceed any of these ratings.
Exceeding the rating (s) may cause the device breakdown, damage or deterioration, and may result injury by explosion or combustion.
Please use the TB6633AFNG within the specified operating ranges.

Note 1: V_{IN1} is applicable to the voltage at the following pins: FPWM, VSP, CW_CCW, LA, OC, SEL_LAP, FST, BRAKE and SLOP

Note 2: V_{IN2} is applicable to the voltage at the COM pin.

Note 3: V_{OUT1} is applicable to the voltage at the following pins: U, V and W

Note 4: V_{OUT2} is applicable to the voltage at the FG_OUT pin.

Note 5: I_{OUT1} is applicable to the current at the following pins: U, V and W

Note 6: I_{OUT2} is applicable to the current at the FG_OUT pin.

Note 7: I_{OUT3} is applicable to the current at the VREF pin.

Note 8: Output current may be limited by the ambient temperature or the device implementation.
The maximum junction temperature should not exceed T_{jmax} = 150°C

Note 9: Measured for the IC only. (Ta = 25°C)

Operating Ranges

Characteristics	Symbol	Min	Typ.	Max	Unit
Power supply voltage 1	VM_{opr1}	5.5	12	22	V
Power supply voltage 2 (Note 10)	VM_{opr2}	4.5	5	5.5	V

Note 10: Please pay attention to use the IC when VM is 5.5 V or less because the characteristics of the output ON resistance and the output voltage of VREF change.

Downloaded from Arrow.com.

Package Power Dissipation

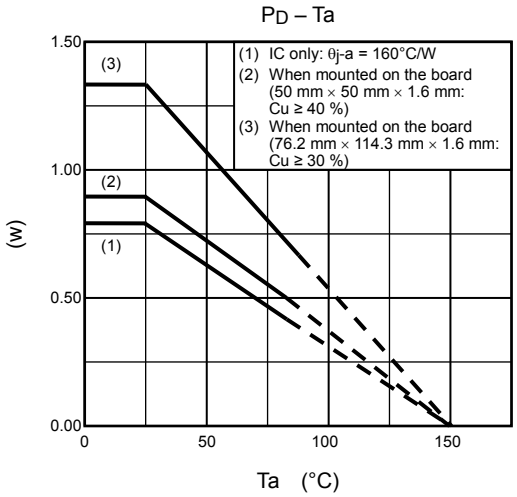

Electrical Characteristics
(Ta = 25°C, VM = 12 V, unless otherwise specified)

Characteristics	Symbol	Test Conditions	Min	Typ.	Max	Unit
Static power supply current of VM	I_M	VSP = VST = 0 V, IR = TIP = COM = GND, The OSC_C = 68 pF, OSC_R = 20 kΩ	—	3.5	6	mA
Dynamic power supply current of VM	$I_{M\ (opr)}$	VSP = VST = 2.5 V, IR = TIP = COM = GND, The OSC_C = 68 pF, OSC_R = 20 kΩ	—	4	7	mA
Input current	I_{IN1} (H)	V_{IN} = 5 V FPWM, CW_CCW, SEL_LAP, BRAKE, FST, SLOP, LA	—	50	75	μA
	I_{IN1} (L)	V_{IN} = 0 V, FPWM, CW_CCW, SEL_LAP, BRAKE, FST, SLOP, LA	−1	0	—	
	I_{IN2} (H)	V_{IN} = 5 V, VSP	—	50	75	
	I_{IN2} (L)	V_{IN} = 0 V, VSP	−1	0	—	
Input voltage	V_{IN1} (H)	FPWM, CW_CCW, SEL_LAP, BRAKE	2.0	—	5.5	V
	V_{IN1} (L)		GND	—	0.8	
	V_{IN2} (H)	FST, SLOP, LA	4	—	VREF+ 0.3	
	V_{IN2} (M)		2	—	3	
	V_{IN2} (L)		GND	—	1	
Input voltage hysteresis	Vhys	FPWM, CW_CCW, SEL_LAP, BRAKE	—	0.45	—	V
Charge current of the TIP and TRE pins	Ich	OSC_R = 20 kΩ	2.4	3	3.6	μA
Setting time of the TIP and TRE pins	Tipre	TIP = 1 μF, TRE = 1 μF, OSC_R = 20 kΩ	—	1	—	s
Detection voltage of the TIP and TRE pins	V_{DET}	—	2.8	3	3.2	V
COM input current	I_{com}	COM = 6 V, VSP = VST = 2.5 V	−1	0	1	μA
Low-level FG_OUT output voltage	V_{FG_OUT}	I_{FG_OUT} = 5 mA	GND	—	0.5	V
FG_OUT leakage current	I_{LFG_OUT}	V_{FG_OUT} = 5.5 V	—	0	10	μA

Downloaded from Arrow.com.

Characteristics	Symbol	Test Conditions	Min	Typ.	Max	Unit
Output ON-resistance of the U, V and W pins	R_{ON1} (H)	I_{OUT} = 0.6 A	—	0.4	0.65	Ω
	R_{ON1} (L)	I_{OUT} = −0.6 A	—	0.4	0.65	
	R_{ON2} (H)	I_{OUT} = 1.0 A	—	0.4	0.65	
	R_{ON2} (L)	I_{OUT} = −1.0 A	—	0.4	0.65	
	R_{ON3} (H)	I_{OUT} = 0.6 A, VM = 4.5 V	—	0.45	0.75	
	R_{ON3} (L)	I_{OUT} = −0.6 A, VM = 4.5 V	—	0.45	0.75	
	R_{ON4} (H)	I_{OUT} = 1.0 A, VM = 4.5 V	—	0.45	0.75	
	R_{ON4} (L)	I_{OUT} = −1.0 A, VM = 4.5 V	—	0.45	0.75	
Output leakage current of the U, V and W pins	I_L (H)	V_{OUT} = 0 V	—	0	10	μA
	I_L (L)	V_{OUT} = 25 V	—	0	10	
Output diodes' forward voltage of the U, V and W pins	V_F (H)	I_{OUT} = 1.0 A	—	1.0	1.4	V
	V_F (L)	I_{OUT} = −1.0 A	—	1.0	1.4	
VSP reset input voltage	V_{VSPR}	—	0.9	1.0	1.1	V
PWM input voltage	V_{AD} (L)	VSP = VST, FPWM = L OSC_C = 68 pF, OSC_R = 20 kΩ	0.9	1.0	1.1	V
	V_{AD} (H)		3.6	4.0	4.2	
OC pin voltage for current detection	V_{OC1}	—	0.225	0.25	0.275	V
OC pin voltage threshold for overcurrent detection	V_{OC2}	—	0.675	0.75	0.825	V
PWM frequency	F_{C1} (H)	FPWM = H OSC_C = 68 pF, OSC_R = 20 kΩ	36	40	44	kHz
	F_{C1} (L)	FPWM = L OSC_C = 68 pF, OSC_R = 20 kΩ	18	20	22	
OSC frequency	OSC	OSC_C = 68 pF, OSC_R = 20 kΩ	4.55	5.1	5.65	MHz
ISD trip threshold	I_{ISD}	—	—	2	—	A
Thermal shutdown	TSD	—	—	165	—	°C
	TSDhys	Thermal shutdown hysteresis	—	15	—	
UVLO trip threshold voltage of the VM pin	VM_{LVD}	—	—	3.5	—	V
UVLO recovery voltage of the VM pin	VM_{LVDR}	—	—	4.0	—	V
UVLO trip threshold voltage of the VREF pin	V_{RELVD}	—	—	3.5	—	V
UVLO recovery voltage of the VREF pin	V_{RERLVD}	—	—	4.0	—	V
VREF output voltage	VREF1	IVREF = −5 mA	4.5	5	5.5	V
	VREF2	IVREF = −5 mA, VM = 4.5 V	4.0	4.3	4.5	V

Downloaded from Arrow.com.

Application Circuit Example

Some of the functional blocks, circuits, or constants in the block diagram may be omitted or simplified for explanatory purposes.

The application circuits shown in this document are provided for reference purposes only. Thorough evaluation is required, especially at the mass production design stage.

Toshiba does not grant any license to any industrial property rights by providing these examples of application circuits.

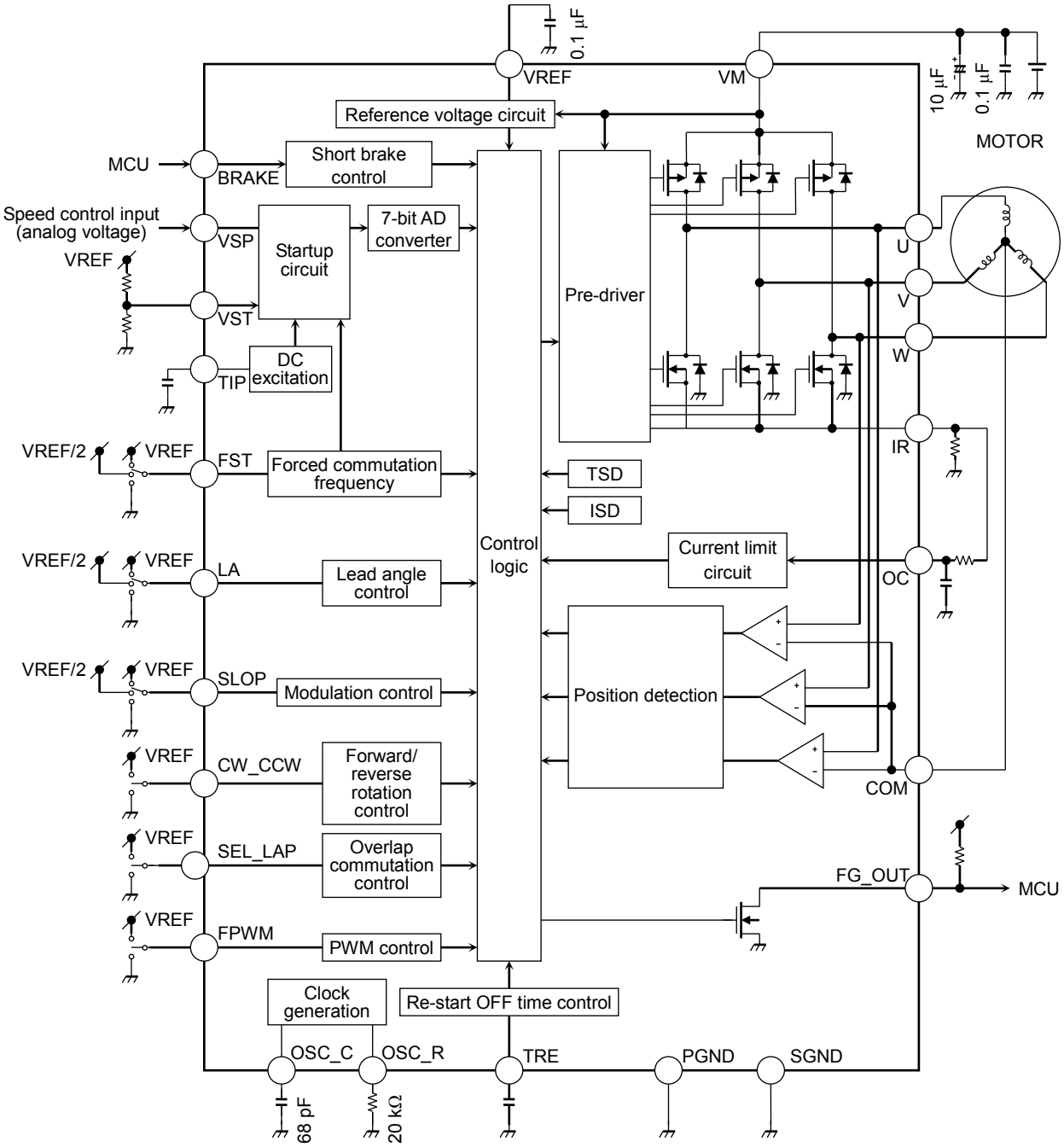

Downloaded from Arrow.com.

Package Dimensions

SSOP24-P-300-0.65A "Unit : mm"

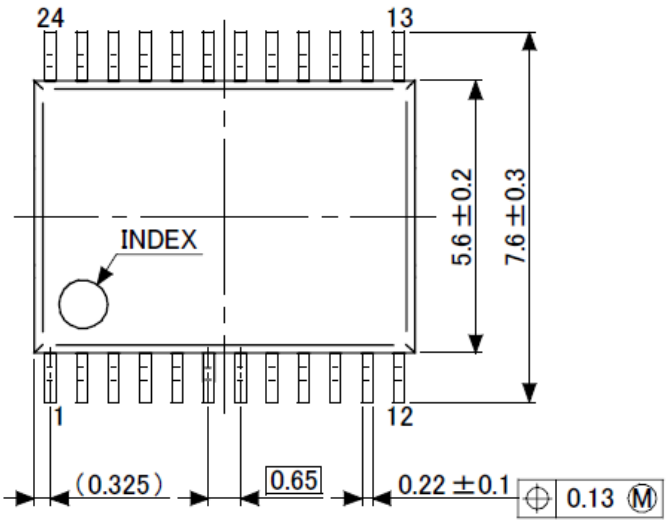

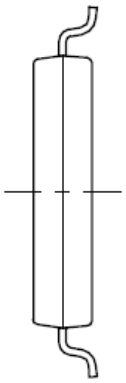

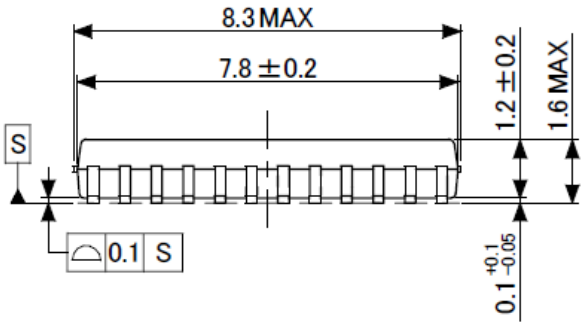

Detailed diagram of tip of terminal

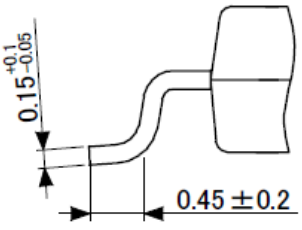

Weight: 0.136 g (typ.)

Downloaded from Arrow.com.

Notes on Contents

1. Block Diagrams

Some of the functional blocks, circuits, or constants in the block diagram may be omitted or simplified for explanatory purposes.

2. Equivalent Circuits

The equivalent circuit diagrams may be simplified or some parts of them may be omitted for explanatory purposes.

3. Timing Charts

Timing charts may be simplified for explanatory purposes.

4. Application Circuits

The application circuits shown in this document are provided for reference purposes only. Thorough evaluation is required, especially at the mass production design stage.
Toshiba does not grant any license to any industrial property rights by providing these examples of application circuits.

5. Test Circuits

Components in the test circuits are used only to obtain and confirm the device characteristics. These components and circuits are not guaranteed to prevent malfunction or failure from occurring in the application equipment.

IC Usage Considerations

Notes on handling of ICs

(1) The absolute maximum ratings of a semiconductor device are a set of ratings that must not be exceeded, even for a moment. Do not exceed any of these ratings.
Exceeding the rating(s) may cause the device breakdown, damage or deterioration, and may result injury by explosion or combustion.

(2) Use an appropriate power supply fuse to ensure that a large current does not continuously flow in case of over current and/or IC failure. The IC will fully break down when used under conditions that exceed its absolute maximum ratings, when the wiring is routed improperly or when an abnormal pulse noise occurs from the wiring or load, causing a large current to continuously flow and the breakdown can lead smoke or ignition. To minimize the effects of the flow of a large current in case of breakdown, appropriate settings, such as fuse capacity, fusing time and insertion circuit location, are required.

(3) If your design includes an inductive load such as a motor coil, incorporate a protection circuit into the design to prevent device malfunction or breakdown caused by the current resulting from the inrush current at power ON or the negative current resulting from the back electromotive force at power OFF. IC breakdown may cause injury, smoke or ignition.
Use a stable power supply with ICs with built-in protection functions. If the power supply is unstable, the protection function may not operate, causing IC breakdown. IC breakdown may cause injury, smoke or ignition.

(4) Do not insert devices in the wrong orientation or incorrectly.
Make sure that the positive and negative terminals of power supplies are connected properly. Otherwise, the current or power consumption may exceed the absolute maximum rating, and exceeding the rating(s) may cause the device breakdown, damage or deterioration, and may result injury by explosion or combustion.
In addition, do not use any device that is applied the current with inserting in the wrong orientation or incorrectly even just one time.

Downloaded from Arrow.com.

Points to remember on handling of ICs

(1) Over current Protection Circuit

Over current protection circuits (referred to as current limiter circuits) do not necessarily protect ICs under all circumstances. If the Over current protection circuits operate against the over current, clear the over current status immediately.

Depending on the method of use and usage conditions, such as exceeding absolute maximum ratings can cause the over current protection circuit to not operate properly or IC breakdown before operation. In addition, depending on the method of use and usage conditions, if over current continues to flow for a long time after operation, the IC may generate heat resulting in breakdown.

(2) Thermal Shutdown Circuit

Thermal shutdown circuits do not necessarily protect ICs under all circumstances. If the thermal shutdown circuits operate against the over temperature, clear the heat generation status immediately. Depending on the method of use and usage conditions, such as exceeding absolute maximum ratings can cause the thermal shutdown circuit to not operate properly or IC breakdown before operation.

(3) Heat Radiation Design

In using an IC with large current flow such as power amp, regulator or driver, please design the device so that heat is appropriately radiated, not to exceed the specified junction temperature (T_j) at any time and condition. These ICs generate heat even during normal use. An inadequate IC heat radiation design can lead to decrease in IC life, deterioration of IC characteristics or IC breakdown. In addition, please design the device taking into considerate the effect of IC heat radiation with peripheral components.

(4) Back-EMF

When a motor rotates in the reverse direction, stops or slows down abruptly, a current flow back to the motor's power supply due to the effect of back-EMF. If the current sink capability of the power supply is small, the device's motor power supply and output pins might be exposed to conditions beyond absolute maximum ratings. To avoid this problem, take the effect of back-EMF into consideration in system design.

Downloaded from Arrow.com.

RESTRICTIONS ON PRODUCT USE

- Toshiba Corporation, and its subsidiaries and affiliates (collectively "TOSHIBA"), reserve the right to make changes to the information in this document, and related hardware, software and systems (collectively "Product") without notice.
- This document and any information herein may not be reproduced without prior written permission from TOSHIBA. Even with TOSHIBA's written permission, reproduction is permissible only if reproduction is without alteration/omission.
- Though TOSHIBA works continually to improve Product's quality and reliability, Product can malfunction or fail. Customers are responsible for complying with safety standards and for providing adequate designs and safeguards for their hardware, software and systems which minimize risk and avoid situations in which a malfunction or failure of Product could cause loss of human life, bodily injury or damage to property, including data loss or corruption. Before customers use the Product, create designs including the Product, or incorporate the Product into their own applications, customers must also refer to and comply with (a) the latest versions of all relevant TOSHIBA information, including without limitation, this document, the specifications, the data sheets and application notes for Product and the precautions and conditions set forth in the "TOSHIBA Semiconductor Reliability Handbook" and (b) the instructions for the application with which the Product will be used with or for. Customers are solely responsible for all aspects of their own product design or applications, including but not limited to (a) determining the appropriateness of the use of this Product in such design or applications; (b) evaluating and determining the applicability of any information contained in this document, or in charts, diagrams, programs, algorithms, sample application circuits, or any other referenced documents; and (c) validating all operating parameters for such designs and applications. **TOSHIBA ASSUMES NO LIABILITY FOR CUSTOMERS' PRODUCT DESIGN OR APPLICATIONS.**
- **PRODUCT IS NEITHER INTENDED NOR WARRANTED FOR USE IN EQUIPMENTS OR SYSTEMS THAT REQUIRE EXTRAORDINARILY HIGH LEVELS OF QUALITY AND/OR RELIABILITY, AND/OR A MALFUNCTION OR FAILURE OF WHICH MAY CAUSE LOSS OF HUMAN LIFE, BODILY INJURY, SERIOUS PROPERTY DAMAGE AND/OR SERIOUS PUBLIC IMPACT ("UNINTENDED USE").** Except for specific applications as expressly stated in this document, Unintended Use includes, without limitation, equipment used in nuclear facilities, equipment used in the aerospace industry, Class 3 medical devices, equipment used for automobiles, and military vehicles and munitions. **IF YOU USE PRODUCT FOR UNINTENDED USE, TOSHIBA ASSUMES NO LIABILITY FOR PRODUCT.** For details, please contact your TOSHIBA sales representative or contact us via our website.
- Do not disassemble, analyze, reverse-engineer, alter, modify, translate or copy Product, whether in whole or in part.
- Product shall not be used for or incorporated into any products or systems whose manufacture, use, or sale is prohibited under any applicable laws or regulations.
- The information contained herein is presented only as guidance for Product use. No responsibility is assumed by TOSHIBA for any infringement of patents or any other intellectual property rights of third parties that may result from the use of Product. No license to any intellectual property right is granted by this document, whether express or implied, by estoppel or otherwise.
- **ABSENT A WRITTEN SIGNED AGREEMENT, EXCEPT AS PROVIDED IN THE RELEVANT TERMS AND CONDITIONS OF SALE FOR PRODUCT, AND TO THE MAXIMUM EXTENT ALLOWABLE BY LAW, TOSHIBA (1) ASSUMES NO LIABILITY WHATSOEVER, INCLUDING WITHOUT LIMITATION, INDIRECT, CONSEQUENTIAL, SPECIAL, OR INCIDENTAL DAMAGES OR LOSS, INCLUDING WITHOUT LIMITATION, LOSS OF PROFITS, LOSS OF OPPORTUNITIES, BUSINESS INTERRUPTION AND LOSS OF DATA, AND (2) DISCLAIMS ANY AND ALL EXPRESS OR IMPLIED WARRANTIES AND CONDITIONS RELATED TO SALE, USE OF PRODUCT, OR INFORMATION, INCLUDING WARRANTIES OR CONDITIONS OF MERCHANTABILITY, FITNESS FOR A PARTICULAR PURPOSE, ACCURACY OF INFORMATION, OR NONINFRINGEMENT.**
- Do not use or otherwise make available Product or related software or technology for any military purposes, including without limitation, for the design, development, use, stockpiling or manufacturing of nuclear, chemical, or biological weapons or missile technology products (mass destruction weapons). Product and related software and technology may be controlled under the applicable export laws and regulations including, without limitation, the Japanese Foreign Exchange and Foreign Trade Law and the U.S. Export Administration Regulations. Export and re-export of Product or related software or technology are strictly prohibited except in compliance with all applicable export laws and regulations.
- Please contact your TOSHIBA sales representative for details as to environmental matters such as the RoHS compatibility of Product. Please use Product in compliance with all applicable laws and regulations that regulate the inclusion or use of controlled substances, including without limitation, the EU RoHS Directive. **TOSHIBA ASSUMES NO LIABILITY FOR DAMAGES OR LOSSES OCCURRING AS A RESULT OF NONCOMPLIANCE WITH APPLICABLE LAWS AND REGULATIONS.**

Downloaded from Arrow.com.