Single Supply Quad Operational Amplifiers

MC3403, MC3303

The MC3403 is a low cost, quad operational amplifier with true differential inputs. The device has electrical characteristics similar to the popular MC1741C. However, the MC3403 has several distinct advantages over standard operational amplifier types in single supply applications. The quad amplifier can operate at supply voltages as low as 3.0 V or as high as 36 V with quiescent currents about one third of those associated with the MC1741C (on a per amplifier basis). The common mode input range includes the negative supply, thereby eliminating the necessity for external biasing components in many applications. The output voltage range also includes the negative power supply voltage.

Features

- Short Circuit Protected Outputs
- Class AB Output Stage for Minimal Crossover Distortion
- True Differential Input Stage
- Single Supply Operation: 3.0 V to 36 V
- Split Supply Operation: ±1.5 V to ±18 V
- Low Input Bias Currents: 500 nA Max
- Four Amplifiers Per Package
- Internally Compensated
- Similar Performance to Popular MC1741C
- Industry Standard Pin−outs
- ESD Diodes Added for Increased Ruggedness
- Pb−Free Packages are Available

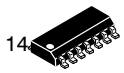

SOIC−14
D SUFFIX
CASE 751A

PIN CONNECTIONS

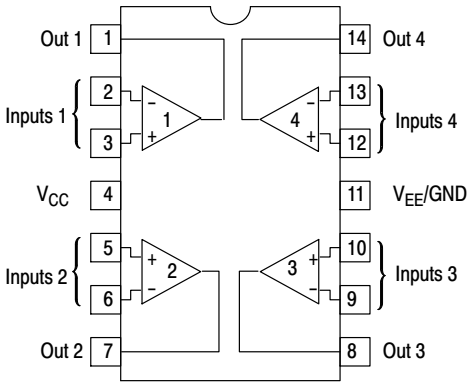

(Top View)

MARKING DIAGRAM

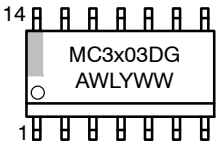

x = 3 or 4
A = Assembly Location
WL = Wafer Lot
Y = Year
WW = Work Week

ORDERING INFORMATION

See detailed ordering and shipping information in the package dimensions section on page 8 of this data sheet.

NOTE: Some of the devices on this data sheet have been **DISCONTINUED**. Please refer to the table on page 8.

Single Supply

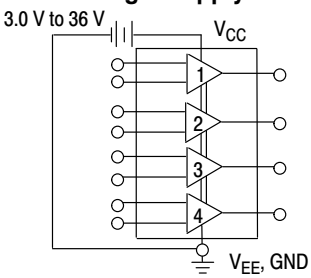

Split Supplies

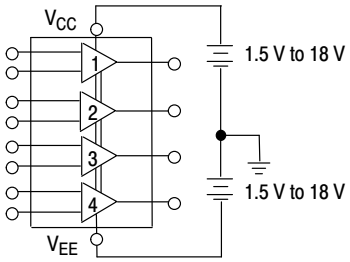

© Semiconductor Components Industries, LLC, 2012

Downloaded from Arrow.com.

MAXIMUM RATINGS

Symbol	Rating	Value	Unit
V_{CC} V_{CC}, V_{EE}	Power Supply Voltages Single Supply Split Supplies	 36 ±18	Vdc
V_{IDR}	Input Differential Voltage Range (Note 1)	±36	Vdc
V_{ICR}	Input Common Mode Voltage Range (Notes 1 and 2)	±18	Vdc
T_{stg}	Storage Temperature Range	−55 to +125	°C
T_A	Operating Ambient Temperature Range MC3303 MC3403	 −40 to +85 0 to +70	°C
T_J	Junction Temperature	150	°C

Stresses exceeding those listed in the Maximum Ratings table may damage the device. If any of these limits are exceeded, device functionality should not be assumed, damage may occur and reliability may be affected.

1. Split power supplies.
2. For supply voltages less than ±18 V, the absolute maximum input voltage is equal to the supply voltage.

Share Feedback
Your Opinion Matters

Downloaded from Arrow.com.

ELECTRICAL CHARACTERISTICS

(V_{CC} = +15 V, V_{EE} = −15 V for MC3403; V_{CC} = +14 V, V_{EE} = GND for MC3303 T_A = 25°C, unless otherwise noted.)

Symbol	Characteristic	MC3403			MC3303			Unit
		Min	Typ	Max	Min	Typ	Max	
V_{IO}	Input Offset Voltage $T_A = T_{high}$ to T_{low} (Note 3)	– –	2.0 –	10 12	– –	2.0 –	8.0 10	mV
I_{IO}	Input Offset Current $T_A = T_{high}$ to T_{low}	– –	30 –	50 200	– –	30 –	75 250	nA
A_{VOL}	Large Signal Open Loop Voltage Gain V_O = ±10 V, R_L = 2.0 kΩ $T_A = T_{high}$ to T_{low}	 20 15	 200 –	 – –	 20 15	 200 –	 – –	V/mV
I_{IB}	Input Bias Current $T_A = T_{high}$ to T_{low}	– –	–200 –	–500 –800	– –	–200 –	–500 –1000	nA
z_o	Output Impedance f = 20 Hz	–	75	–	–	75	–	Ω
z_i	Input Impedance f = 20 Hz	0.3	1.0	–	0.3	1.0	–	MΩ
V_O	Output Voltage Range R_L = 10 kΩ R_L = 2.0 kΩ R_L = 2.0 kΩ, T_A = T_{high} to T_{low}	 ±12 ±10 ±10	 ±13.5 ±13 –	 – – –	 12 10 10	 12.5 12 –	 – – –	V
V_{ICR}	Input Common Mode Voltage Range	+13 V $-V_{EE}$	+13 V $-V_{EE}$	–	+12 V $-V_{EE}$	+12.5 V $-V_{EE}$	–	V
CMR	Common Mode Rejection $R_S \leq$ 10 kΩ	70	90	–	70	90	–	dB
I_{CC}, I_{EE}	Power Supply Current (V_O = 0) R_L = ∞	–	2.8	7.0	–	2.8	7.0	mA
I_{SC}	Individual Output Short−Circuit Current (Note 4)	±10	±20	±45	±10	±30	±45	mA
PSRR+	Positive Power Supply Rejection Ratio	–	30	150	–	30	150	μV/V
PSRR−	Negative Power Supply Rejection Ratio	–	30	150	–	30	150	μV/V
$\Delta I_{IO}/\Delta T$	Average Temperature Coefficient of Input Offset Current T_A = T_{high} to T_{low}	–	50	–	–	50	–	pA/°C
$\Delta V_{IO}/\Delta T$	Average Temperature Coefficient of Input Offset Voltage T_A = T_{high} to T_{low}	–	10	–	–	10	–	μV/°C
BWp	Power Bandwidth A_V = 1, R_L = 10 kΩ, V_O = 20 V(p−p), THD = 5%	–	9.0	–	–	9.0	–	kHz
BW	Small−Signal Bandwidth A_V = 1, R_L = 10 kΩ, V_O = 50 mV	–	1.0	–	–	1.0	–	MHz
SR	Slew Rate A_V = 1, V_i = −10 V to +10 V	–	0.6	–	–	0.6	–	V/μs
t_{TLH}	Rise Time A_V = 1, R_L = 10 kΩ, V_O = 50 mV	–	0.35	–	–	0.35	–	μs
t_{TLH}	Fall Time A_V = 1, R_L = 10 kΩ, V_O = 50 mV	–	0.35	–	–	0.35	–	μs
os	Overshoot A_V = 1, R_L = 10 kΩ, V_O = 50 mV	–	20	–	–	20	–	%
ϕm	Phase Margin A_V = 1, R_L = 2.0 kΩ, V_O = 200 pF	–	60	–	–	60	–	°
–	Crossover Distortion (V_{in} = 30 mVpp,V_{out}= 2.0 Vpp, f = 10 kHz)	–	1.0	–	–	1.0	–	%

Product parametric performance is indicated in the Electrical Characteristics for the listed test conditions, unless otherwise noted. Product performance may not be indicated by the Electrical Characteristics if operated under different conditions.

3. MC3303: T_{low} = −40°C, T_{high} = +85°C, MC3403: T_{low} = 0°C, T_{high} = +70°C
4. Not to exceed maximum package power dissipation.

Share Feedback
Your Opinion Matters

Downloaded from Arrow.com.

ELECTRICAL CHARACTERISTICS (V_{CC} = 5.0 V, V_{EE} = GND, T_A = 25°C, unless otherwise noted.)

Symbol	Characteristic	MC3403			MC3303			Unit
		Min	Typ	Max	Min	Typ	Max	
V_{IO}	Input Offset Voltage	–	2.0	10	–	–	10	mV
I_{IO}	Input Offset Current	–	30	50	–	–	75	nA
I_{IB}	Input Bias Current	–	–200	–500	–	–	–500	nA
A_{VOL}	Large Signal Open Loop Voltage Gain R_L = 2.0 kΩ	10	200	–	10	200	–	V/mV
PSRR	Power Supply Rejection Ratio	–	–	150	–	–	150	μV/V
V_{OR}	Output Voltage Range (Note 5) R_L = 10 kΩ, V_{CC} = 5.0 V R_L = 10 kΩ, 5.0 ≤ V_{CC} ≤ 30 V	 3.3 V_{CC}–2.0	 3.5 V_{CC}–1.7	 – –	 3.3 V_{CC}–2.0	 3.5 V_{CC}–1.7	 – –	V_{pp}
I_{CC}	Power Supply Current	–	2.5	7.0	–	2.5	7.0	mA
CS	Channel Separation f = 1.0 kHz to 20 kHz (Input Referenced)	–	–120	–	–	–120	–	dB

5. Output will swing to ground with a 10 kΩ pull down resistor.

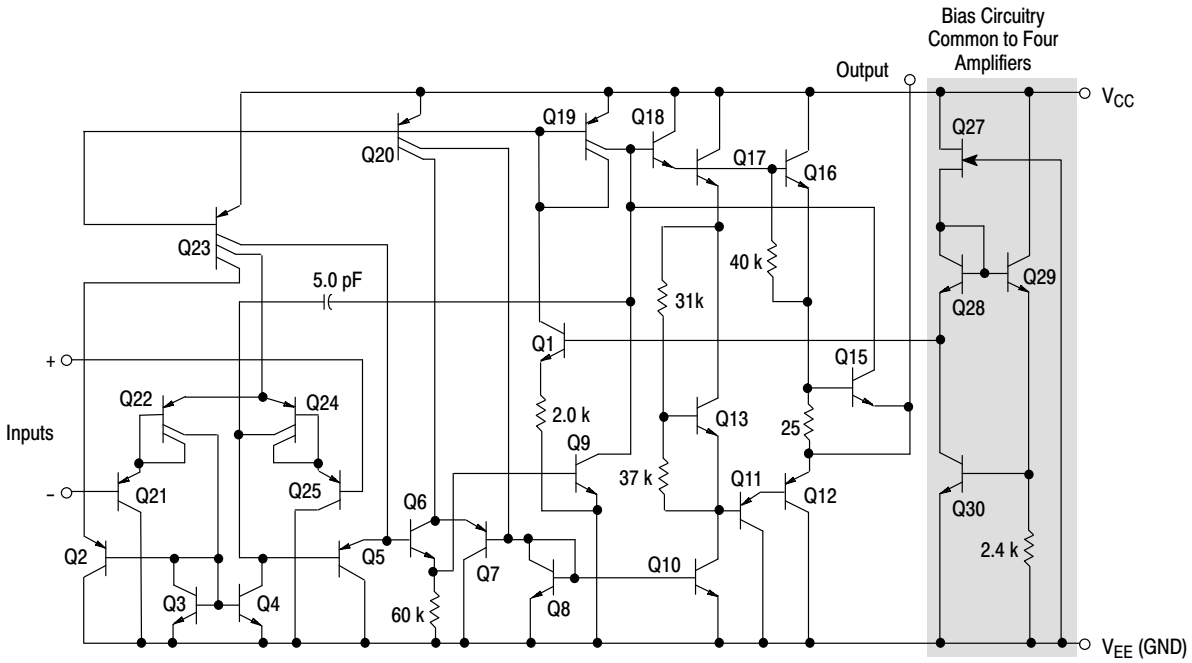

Figure 1. Representative Schematic Diagram
(1/4 of Circuit Shown)

Share Feedback
Your Opinion Matters

Downloaded from Arrow.com.

CIRCUIT DESCRIPTION

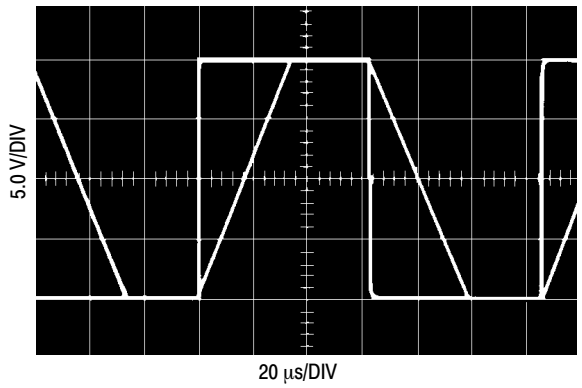

Figure 2. Inverter Pulse Response

The MC3403/3303 is made using four internally compensated, two−stage operational amplifiers. The first stage of each consists of differential input device Q24 and Q22 with input buffer transistors Q25 and Q21 and the differential to single ended converter Q3 and Q4. The first stage performs not only the first stage gain function but also performs the level shifting and Transconductance reduction functions. By reducing the Transconductance, a smaller compensation capacitor (only 5.0 pF) can be employed, thus saving chip area. The Transconductance reduction is accomplished by splitting the collectors of Q24 and Q22. Another feature of this input stage is that the input common mode range can include the negative supply or ground, in single supply operation, without saturating either the input devices or the differential to single−ended converter. The second stage consists of a standard current source load amplifier stage.

The output stage is unique because it allows the output to swing to ground in single supply operation and yet does not exhibit any crossover distortion in split supply operation. This is possible because Class AB operation is utilized.

Each amplifier is biased from an internal voltage regulator which has a low temperature coefficient, thus giving each amplifier good temperature characteristics as well as excellent power supply rejection.

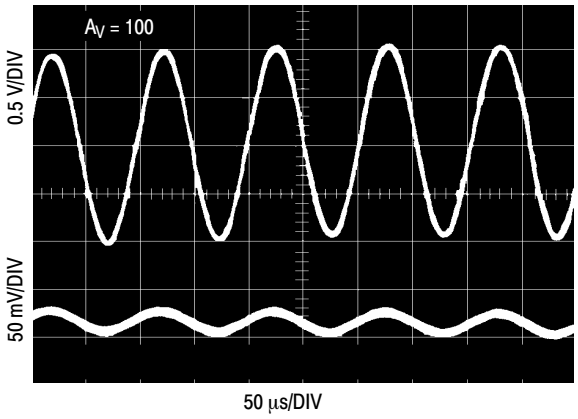

Figure 3. Sine Wave Response

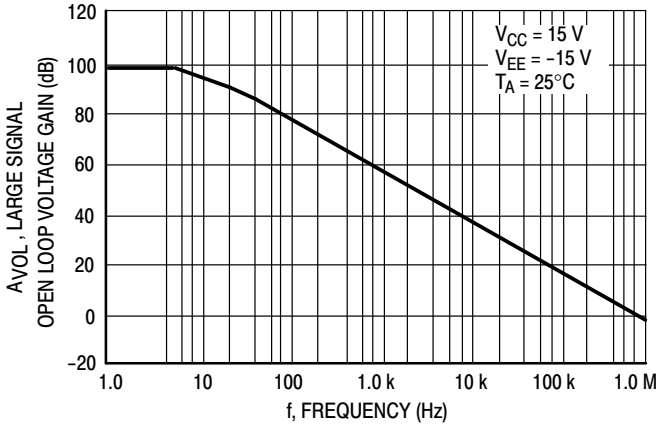

Figure 4. Open Loop Frequency Response

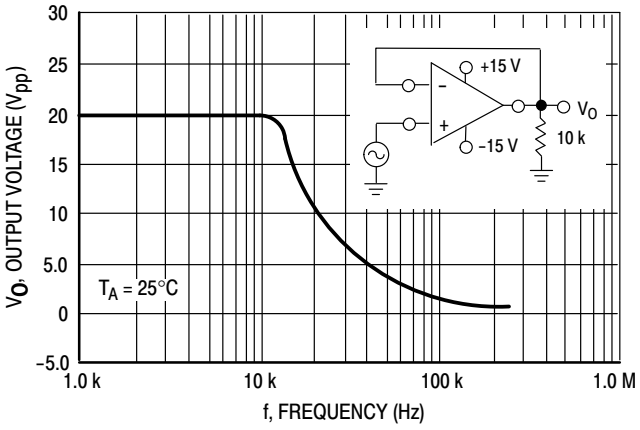

Figure 5. Power Bandwidth

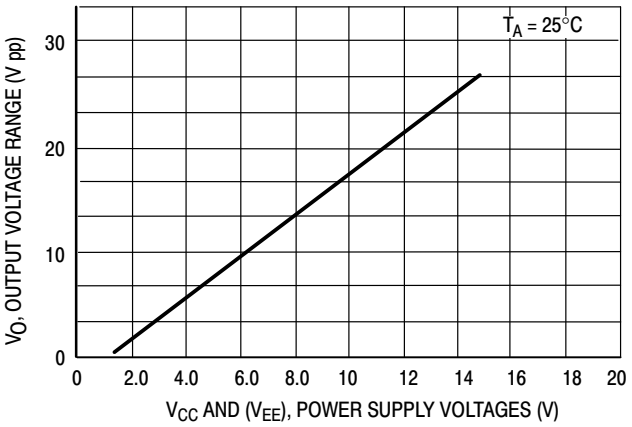

Figure 6. Output Swing versus Supply Voltage

Share Feedback
Your Opinion Matters

Downloaded from Arrow.com.

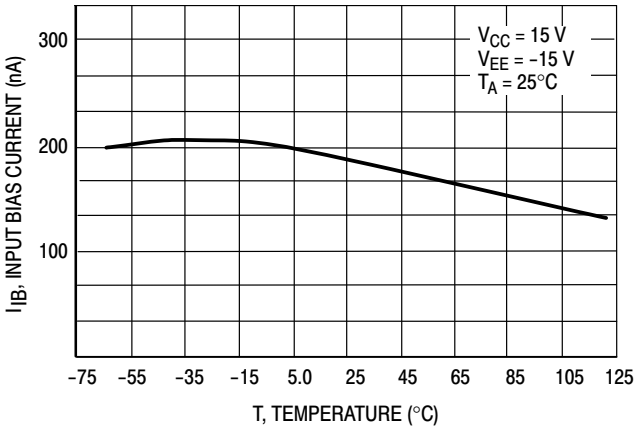

Figure 7. Input Bias Current versus Temperature

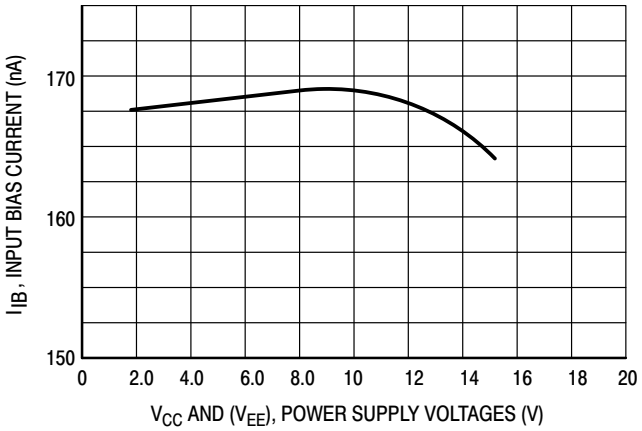

Figure 8. Input Bias Current versus Supply Voltage

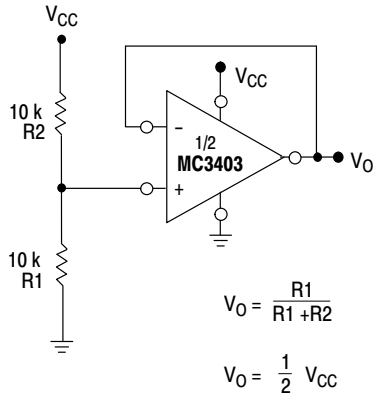

Figure 9. Voltage Reference

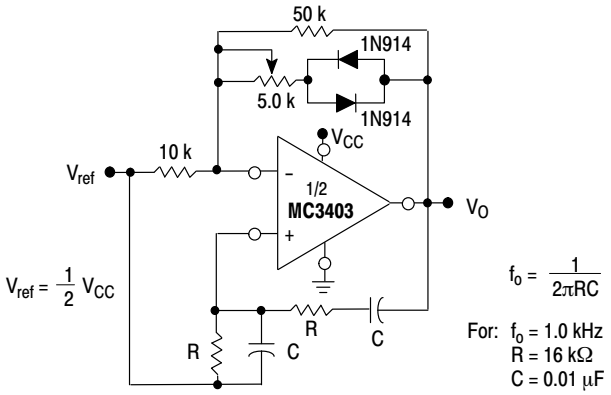

Figure 10. Wien Bridge Oscillator

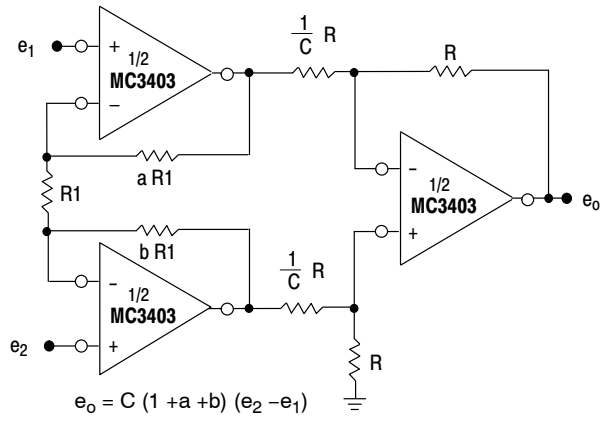

Figure 11. High Impedance Differential Amplifier

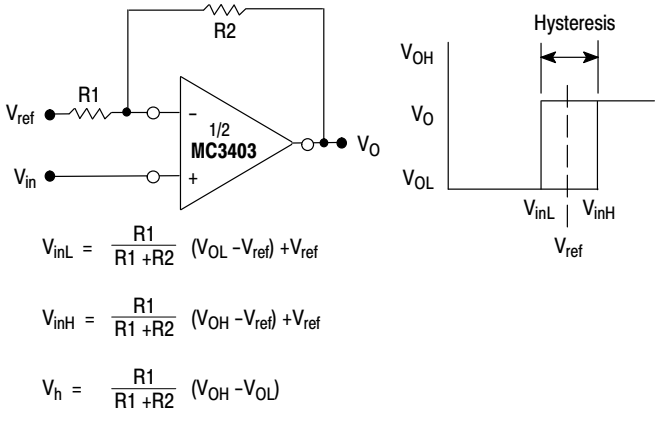

Figure 12. Comparator with Hysteresis

Share Feedback
Your Opinion Matters

Downloaded from Arrow.com.

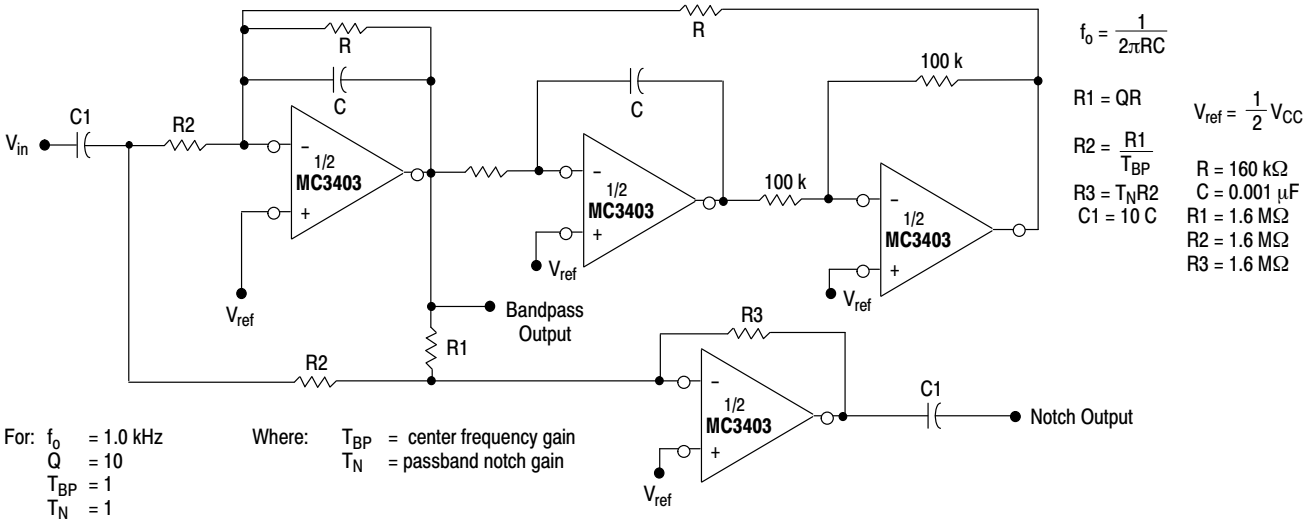

Figure 13. Bi−Quad Filter

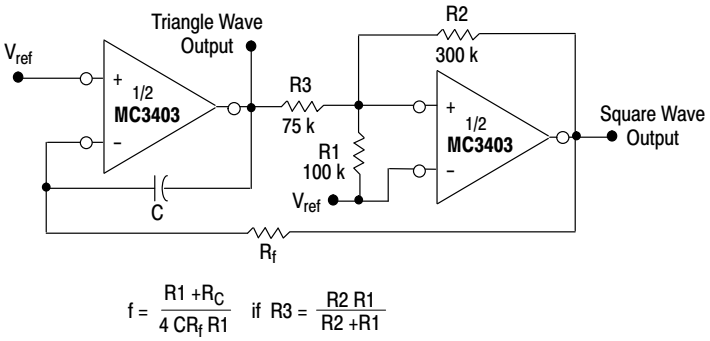

Figure 14. Function Generator

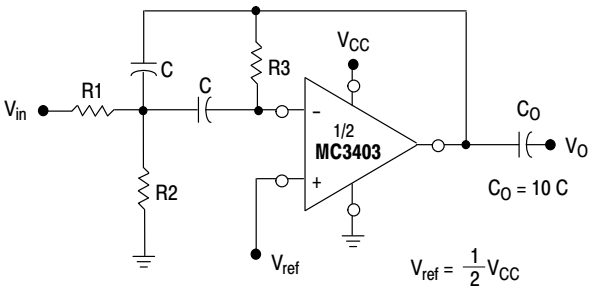

Given: f_o = center frequency
$A(f_o)$ = gain at center frequency

Choose value f_o, C

Then: $R3 = \frac{Q}{\pi f_o C}$ $R1 = \frac{R3}{2 A(f_o)}$ $R2 = \frac{R1\ R5}{4Q^2\ R1 - R5}$

For less than 10% error from operational amplifier $\frac{O_o f_o}{BW} < 0.1$ where f_o and BW are expressed in Hz.

If source impedance varies, filter may be preceded with voltage follower buffer to stabilize filter parameters.

Figure 15. Multiple Feedback Bandpass Filter

Share Feedback
Your Opinion Matters

Downloaded from Arrow.com.

ORDERING INFORMATION

Device	Package	Shipping†
MC3303DR2G	SOIC−14 (Pb−Free)	2,500 Tape & Reel
MC3403DR2G	SOIC−14 (Pb−Free)	2,500 Tape & Reel

DISCONTINUED (Note 6)

MC3303D	SOIC−14	55 Units / Rail
MC3303DG	SOIC−14 (Pb−Free)	
MC3303DR2	SOIC−14	2,500 Tape & Reel

†For information on tape and reel specifications, including part orientation and tape sizes, please refer to our Tape and Reel Packaging Specifications Brochure, BRD8011/D.

6. **DISCONTINUED:** These devices are not recommended for new design. Please contact your **onsemi** representative for information. The most current information on these devices may be available on www.onsemi.com.

Share Feedback
Your Opinion Matters

Downloaded from Arrow.com.

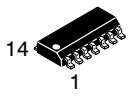

SCALE 1:1

SOIC−14 NB
CASE 751A−03
ISSUE L

DATE 03 FEB 2016

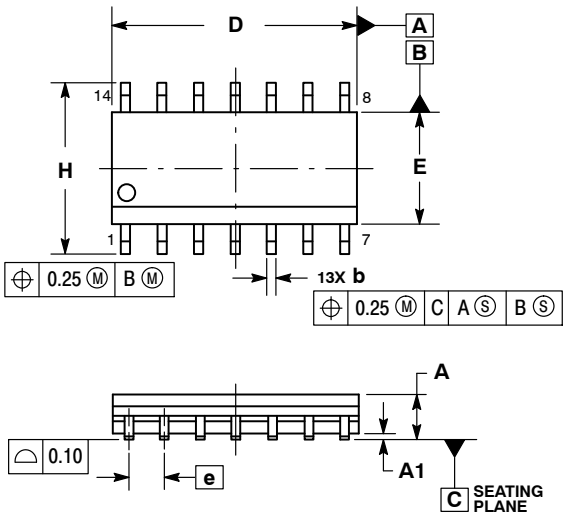

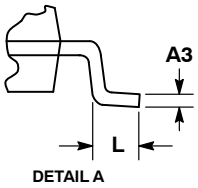

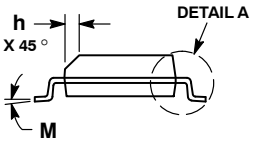

NOTES:
1. DIMENSIONING AND TOLERANCING PER ASME Y14.5M, 1994.
2. CONTROLLING DIMENSION: MILLIMETERS.
3. DIMENSION b DOES NOT INCLUDE DAMBAR PROTRUSION. ALLOWABLE PROTRUSION SHALL BE 0.13 TOTAL IN EXCESS OF AT MAXIMUM MATERIAL CONDITION.
4. DIMENSIONS D AND E DO NOT INCLUDE MOLD PROTRUSIONS.
5. MAXIMUM MOLD PROTRUSION 0.15 PER SIDE.

	MILLIMETERS		INCHES	
DIM	MIN	MAX	MIN	MAX
A	1.35	1.75	0.054	0.068
A1	0.10	0.25	0.004	0.010
A3	0.19	0.25	0.008	0.010
b	0.35	0.49	0.014	0.019
D	8.55	8.75	0.337	0.344
E	3.80	4.00	0.150	0.157
e	1.27 BSC		0.050 BSC	
H	5.80	6.20	0.228	0.244
h	0.25	0.50	0.010	0.019
L	0.40	1.25	0.016	0.049
M	0 °	7 °	0 °	7 °

SOLDERING FOOTPRINT*

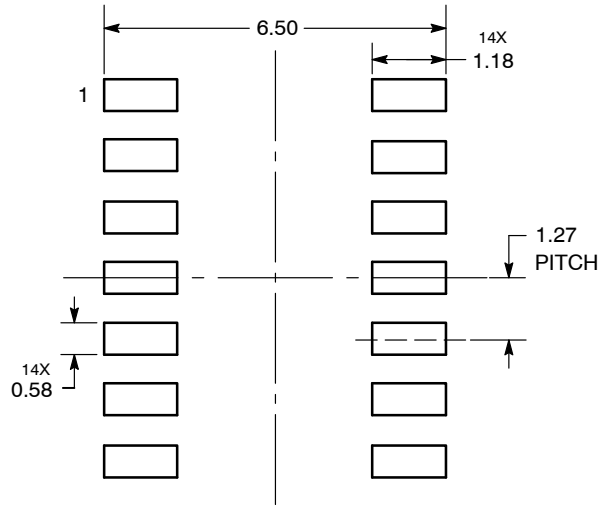

DIMENSIONS: MILLIMETERS

*For additional information on our Pb−Free strategy and soldering details, please download the **onsemi** Soldering and Mounting Techniques Reference Manual, SOLDERRM/D.

GENERIC MARKING DIAGRAM*

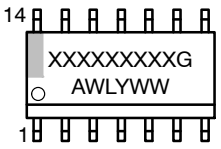

XXXXX = Specific Device Code
A = Assembly Location
WL = Wafer Lot
Y = Year
WW = Work Week
G = Pb−Free Package

*This information is generic. Please refer to device data sheet for actual part marking. Pb−Free indicator, “G” or microdot “▪”, may or may not be present. Some products may not follow the Generic Marking.

STYLES ON PAGE 2

DOCUMENT NUMBER:	**98ASB42565B**	Electronic versions are uncontrolled except when accessed directly from the Document Repository. Printed versions are uncontrolled except when stamped “CONTROLLED COPY” in red.
DESCRIPTION:	**SOIC−14 NB**	**PAGE 1 OF 2**

onsemi and onsemi are trademarks of Semiconductor Components Industries, LLC dba **onsemi** or its subsidiaries in the United States and/or other countries. **onsemi** reserves the right to make changes without further notice to any products herein. **onsemi** makes no warranty, representation or guarantee regarding the suitability of its products for any particular purpose, nor does **onsemi** assume any liability arising out of the application or use of any product or circuit, and specifically disclaims any and all liability, including without limitation special, consequential or incidental damages. **onsemi** does not convey any license under its patent rights nor the rights of others.

Downloaded from Arrow.com.

SOIC−14
CASE 751A−03
ISSUE L

DATE 03 FEB 2016

STYLE 1:
PIN 1. COMMON CATHODE
2. ANODE/CATHODE
3. ANODE/CATHODE
4. NO CONNECTION
5. ANODE/CATHODE
6. NO CONNECTION
7. ANODE/CATHODE
8. ANODE/CATHODE
9. ANODE/CATHODE
10. NO CONNECTION
11. ANODE/CATHODE
12. ANODE/CATHODE
13. NO CONNECTION
14. COMMON ANODE

STYLE 2:
CANCELLED

STYLE 3:
PIN 1. NO CONNECTION
2. ANODE
3. ANODE
4. NO CONNECTION
5. ANODE
6. NO CONNECTION
7. ANODE
8. ANODE
9. ANODE
10. NO CONNECTION
11. ANODE
12. ANODE
13. NO CONNECTION
14. COMMON CATHODE

STYLE 4:
PIN 1. NO CONNECTION
2. CATHODE
3. CATHODE
4. NO CONNECTION
5. CATHODE
6. NO CONNECTION
7. CATHODE
8. CATHODE
9. CATHODE
10. NO CONNECTION
11. CATHODE
12. CATHODE
13. NO CONNECTION
14. COMMON ANODE

STYLE 5:
PIN 1. COMMON CATHODE
2. ANODE/CATHODE
3. ANODE/CATHODE
4. ANODE/CATHODE
5. ANODE/CATHODE
6. NO CONNECTION
7. COMMON ANODE
8. COMMON CATHODE
9. ANODE/CATHODE
10. ANODE/CATHODE
11. ANODE/CATHODE
12. ANODE/CATHODE
13. NO CONNECTION
14. COMMON ANODE

STYLE 6:
PIN 1. CATHODE
2. CATHODE
3. CATHODE
4. CATHODE
5. CATHODE
6. CATHODE
7. CATHODE
8. ANODE
9. ANODE
10. ANODE
11. ANODE
12. ANODE
13. ANODE
14. ANODE

STYLE 7:
PIN 1. ANODE/CATHODE
2. COMMON ANODE
3. COMMON CATHODE
4. ANODE/CATHODE
5. ANODE/CATHODE
6. ANODE/CATHODE
7. ANODE/CATHODE
8. ANODE/CATHODE
9. ANODE/CATHODE
10. ANODE/CATHODE
11. COMMON CATHODE
12. COMMON ANODE
13. ANODE/CATHODE
14. ANODE/CATHODE

STYLE 8:
PIN 1. COMMON CATHODE
2. ANODE/CATHODE
3. ANODE/CATHODE
4. NO CONNECTION
5. ANODE/CATHODE
6. ANODE/CATHODE
7. COMMON ANODE
8. COMMON ANODE
9. ANODE/CATHODE
10. ANODE/CATHODE
11. NO CONNECTION
12. ANODE/CATHODE
13. ANODE/CATHODE
14. COMMON CATHODE

onsemi and ONSEMI are trademarks of Semiconductor Components Industries, LLC dba **onsemi** or its subsidiaries in the United States and/or other countries. **onsemi** reserves the right to make changes without further notice to any products herein. **onsemi** makes no warranty, representation or guarantee regarding the suitability of its products for any particular purpose, nor does **onsemi** assume any liability arising out of the application or use of any product or circuit, and specifically disclaims any and all liability, including without limitation special, consequential or incidental damages. **onsemi** does not convey any license under its patent rights nor the rights of others.

© Semiconductor Components Industries, LLC, 2019

Downloaded from Arrow.com.

onsemi, ONSEMI , and other names, marks, and brands are registered and/or common law trademarks of Semiconductor Components Industries, LLC dba "**onsemi**" or its affiliates and/or subsidiaries in the United States and/or other countries. **onsemi** owns the rights to a number of patents, trademarks, copyrights, trade secrets, and other intellectual property. A listing of **onsemi**'s product/patent coverage may be accessed at www.onsemi.com/site/pdf/Patent−Marking.pdf. **onsemi** reserves the right to make changes at any time to any products or information herein, without notice. The information herein is provided "as−is" and **onsemi** makes no warranty, representation or guarantee regarding the accuracy of the information, product features, availability, functionality, or suitability of its products for any particular purpose, nor does **onsemi** assume any liability arising out of the application or use of any product or circuit, and specifically disclaims any and all liability, including without limitation special, consequential or incidental damages. Buyer is responsible for its products and applications using **onsemi** products, including compliance with all laws, regulations and safety requirements or standards, regardless of any support or applications information provided by **onsemi**. "Typical" parameters which may be provided in **onsemi** data sheets and/or specifications can and do vary in different applications and actual performance may vary over time. All operating parameters, including "Typicals" must be validated for each customer application by customer's technical experts. **onsemi** does not convey any license under any of its intellectual property rights nor the rights of others. **onsemi** products are not designed, intended, or authorized for use as a critical component in life support systems or any FDA Class 3 medical devices or medical devices with a same or similar classification in a foreign jurisdiction or any devices intended for implantation in the human body. Should Buyer purchase or use **onsemi** products for any such unintended or unauthorized application, Buyer shall indemnify and hold **onsemi** and its officers, employees, subsidiaries, affiliates, and distributors harmless against all claims, costs, damages, and expenses, and reasonable attorney fees arising out of, directly or indirectly, any claim of personal injury or death associated with such unintended or unauthorized use, even if such claim alleges that **onsemi** was negligent regarding the design or manufacture of the part. **onsemi** is an Equal Opportunity/Affirmative Action Employer. This literature is subject to all applicable copyright laws and is not for resale in any manner.

ADDITIONAL INFORMATION

TECHNICAL PUBLICATIONS:
Technical Library: www.onsemi.com/design/resources/technical−documentation
onsemi Website: www.onsemi.com

ONLINE SUPPORT: www.onsemi.com/support
For additional information, please contact your local Sales Representative at www.onsemi.com/support/sales

◊

Downloaded from Arrow.com.