BUD	PART NAME	NEMA DIE CAST BOX WITH EMI/RFI SHIELDING	PART No.	ANS-3809 ANS-3809-B	REVISION DATE	8-22-13

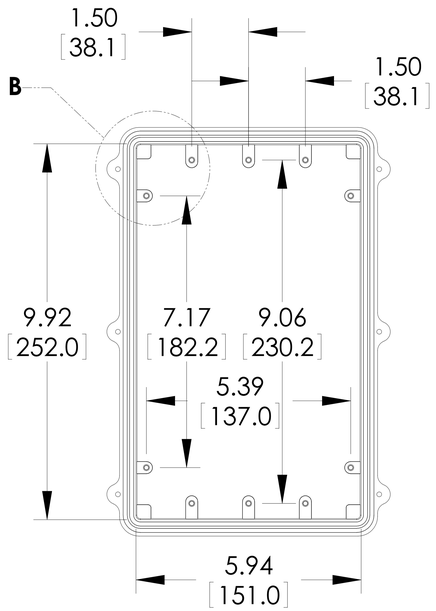

INSIDE BODY DETAILS

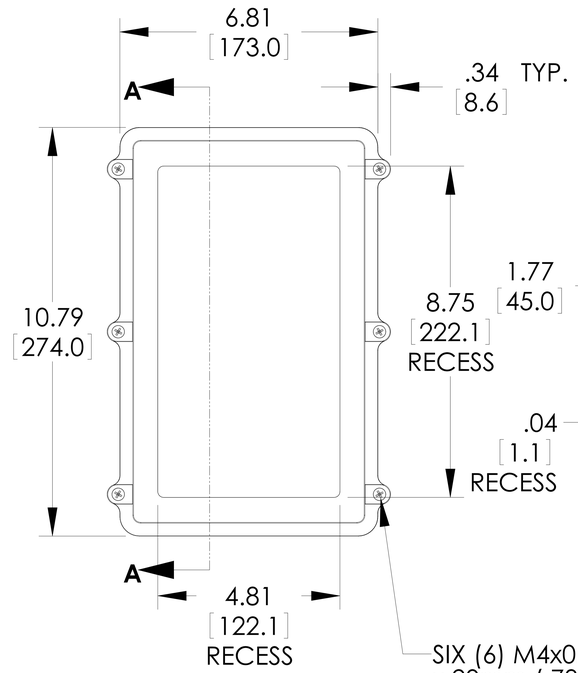

TOP VIEW

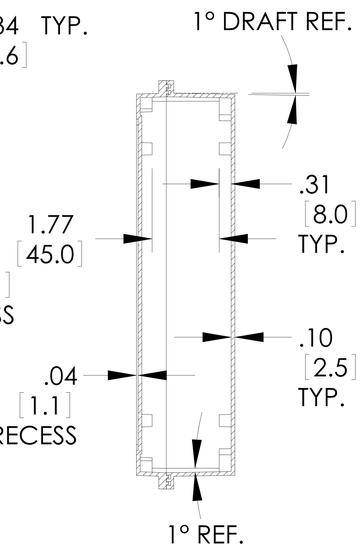

SECTION A-A

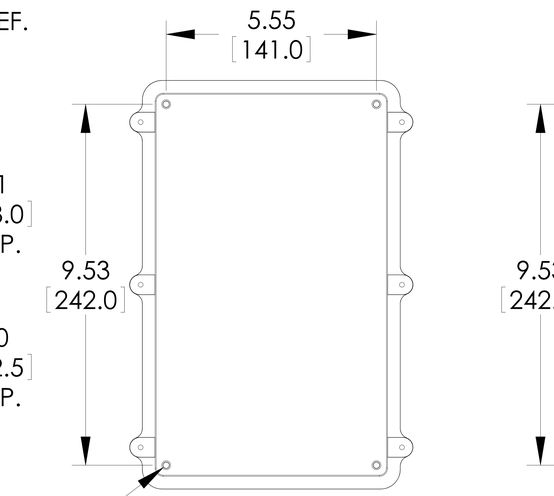

BOTTOM VIEW

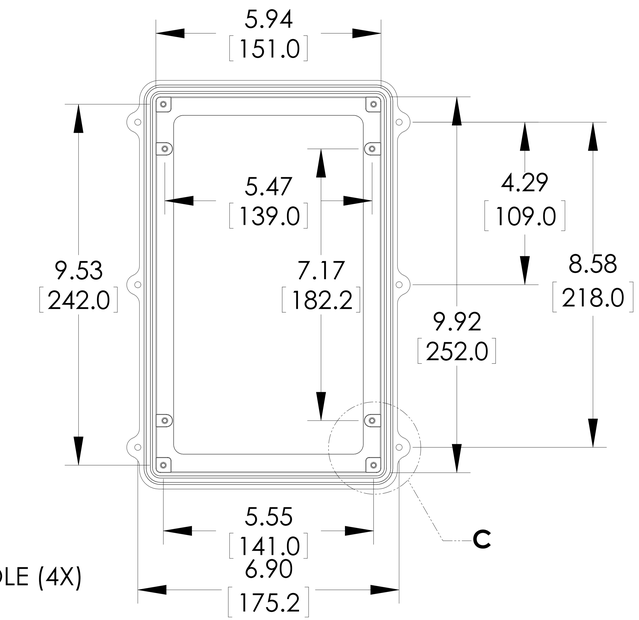

INSIDE COVER DETAILS

MEETS NEMA 1, 2, 4, 4X, 12, 13 AND IP67 RATINGS

MATERIAL - ALUMINUM ALLOY ADC-12

FINISH - NATURAL (NO SUFFIX PART NO.)
- SMOOTH BLACK (-B SUFFIX PART NO.)

TOLERANCES: ALL HOLE DIAMETERS ±.005[±.13]
ALL OTHER DIMENSIONS ±.02[±.4]

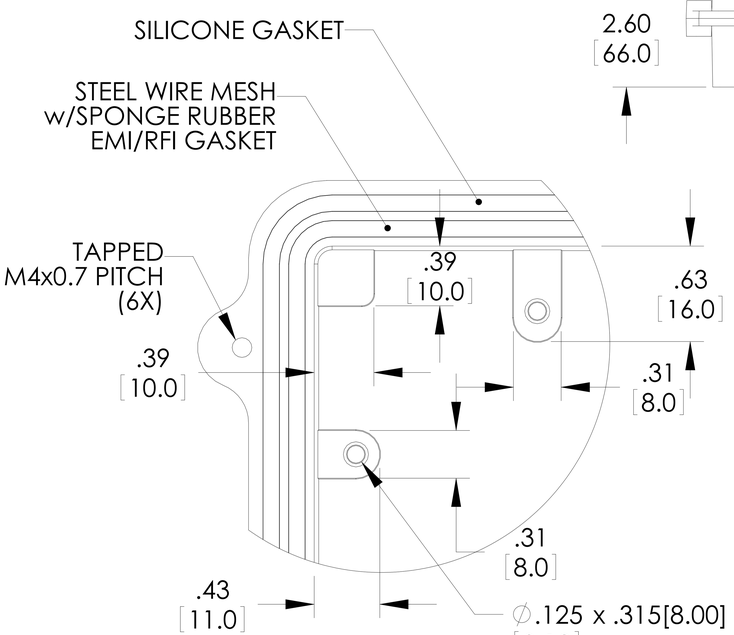

DETAIL B
SCALE 4 : 1

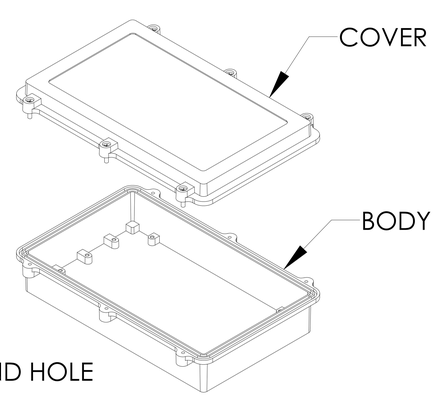

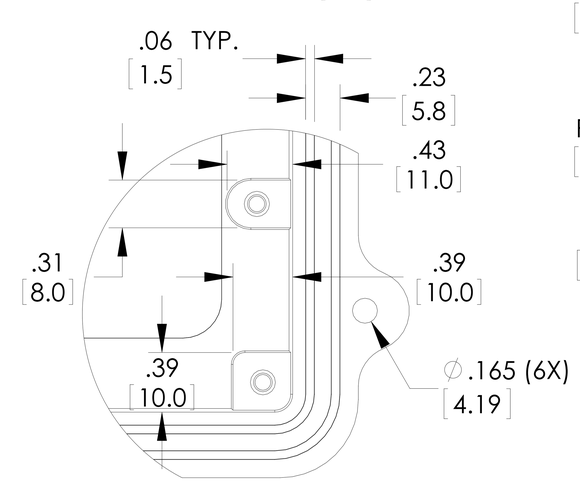

DETAIL C
SCALE 4 : 1

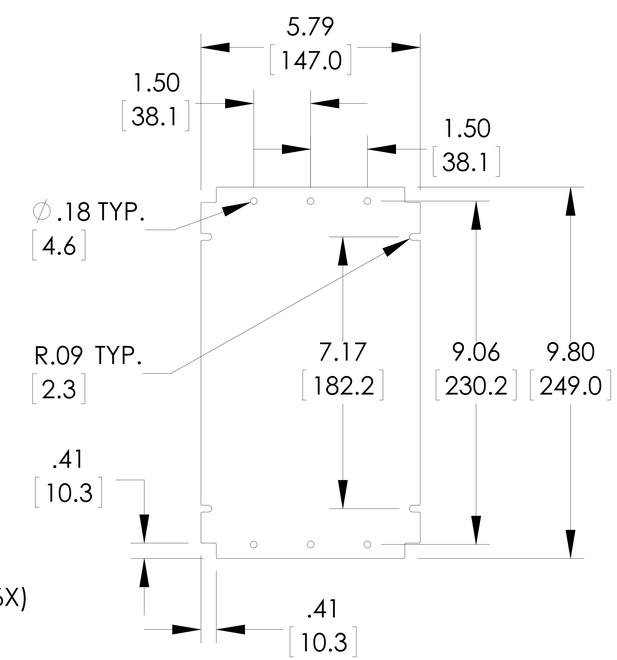

SUGGESTED PC BOARD OR
INTERNAL PANEL LAYOUT