© copyright_dBYe-

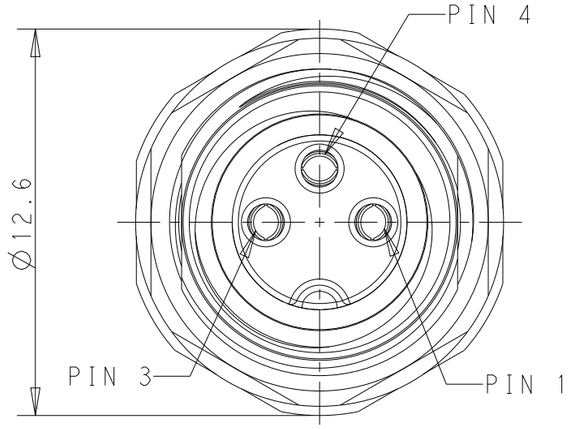

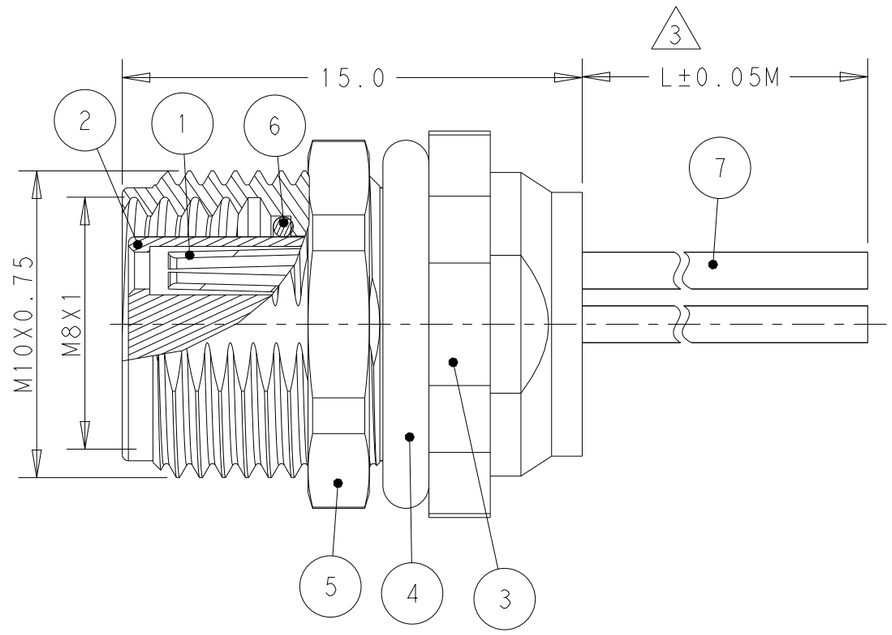

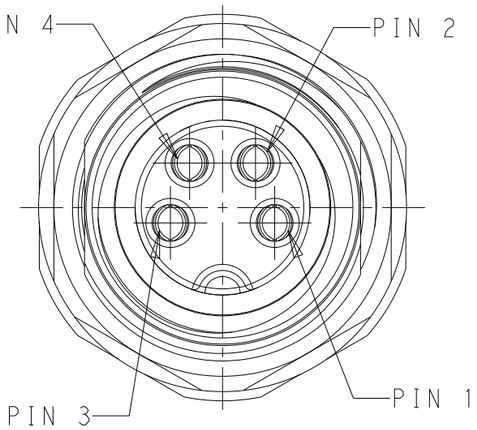

REVISIONS

P	LTR	DESCRIPTION	DATE	DWN	APVD
	A	INITIAL RELEASE	08JUN2021	G.W	C.W

NOTES:

1. TECHNICAL DATA: SEE TABLE 1
2. THE RELEATION BETWEEN WIRE COLOR AND PIN IS: PIN1 BROWN;PIN2 WHITE; PIN3 BLUE;PIN4 BLACK;
3. CABLE LENGHT(L):-00X
   -001:0.2m;
4. IF CUSTOMER NEED OTHER CABLE LENGTH, PLEASE CONTACT TE PRODUCT MANAGER OR SALES FOR HELP.
5. ALL DIMENSIONS ARE FOR NOMINAL REFERENCE ONLY UNLESS OTHERWISE STATED

注意事项

1. 技术参数：见表1
2. PIN数与线颜色的关系是：PIN1棕色线，PIN2白色线，PIN3蓝色线，PIN4黑色线；
3. 线长(L)：-00X
   -001：0.2m；
4. 如果客户需要定制别的长度，请联系TE销售或者产品经理；
5. 所有尺寸仅供参考，除非另有说明

	WIRE	7
RUBBER	O-RING	6
COPPER ALLOY	NUT	5
RUBBER	O-RING	4
COPPER ALLOY	BODY NUT	3
PA66	HOUSING	2
COPPER ALLOY	CONTACT	1
MATERIAL	DESCRIPITON	ITEM

TABLE 1

TECHNICAL DATA	T4071017031-00X	T4071017041-00X
RATED VOLTAGE	60V	30V
RATED CURRENT	3A	
POLLETION DEGREE	3	
OVERVOLTAGE CATEGORY	II	
MATERIAL GROUP	II	
DEGREE OF PROTECTION	IP67	
INSULATION RESISTANCE	>100MΩ	
TEMPERATURE	-40°C~85°C	

DESCRIPTION	TE PN	ENTRELEC PN
M8-FF-3CON-M10-0.2LA	T4071017031-001	1SET310127R0000
M8-FF-4CON-M10-0.2LA	T4071017041-001	1SET310128R0000

THIS DRAWING IS A CONTROLLED DOCUMENT.

DIMENSIONS: mm

TOLERANCES UNLESS OTHERWISE SPECIFIED:
0 PLC ±-
1 PLC ±0.25
2 PLC ±0.15
3 PLC ±
4 PLC ±
ANGLES ±-

MATERIAL - -

FINISH - -

DWN GAVIN WANG 06JUN2021
CHK KEVIN HUANG 06JUN2021
APVD CHRIS WANG 06JUN2021
PRODUCT SPEC 108-106140
APPLICATION SPEC 114-137144-1
WEIGHT -

ENTRELEC Electrical Solutions

NAME M8 PANEL CONNECTOR FEMALE SIDE REAR MOUNTING WITH SINGLE WIRE
-

SIZE A3 | CAGE CODE | DRAWING NO ©-1SET310P02R0000 | RESTRICTED TO

CUSTOMER DRAWING | SCALE 2:1 | SHEET 1 OF 1 | REV A

1470-19 (3/13)

Downloaded from Arrow.com.