Downloaded from Arrow.com.

MICRO SWITCH
a Honeywell Division
FED. MFG. CODE 91929

SWITCH – BASIC

CATALOG LISTING
2DM8

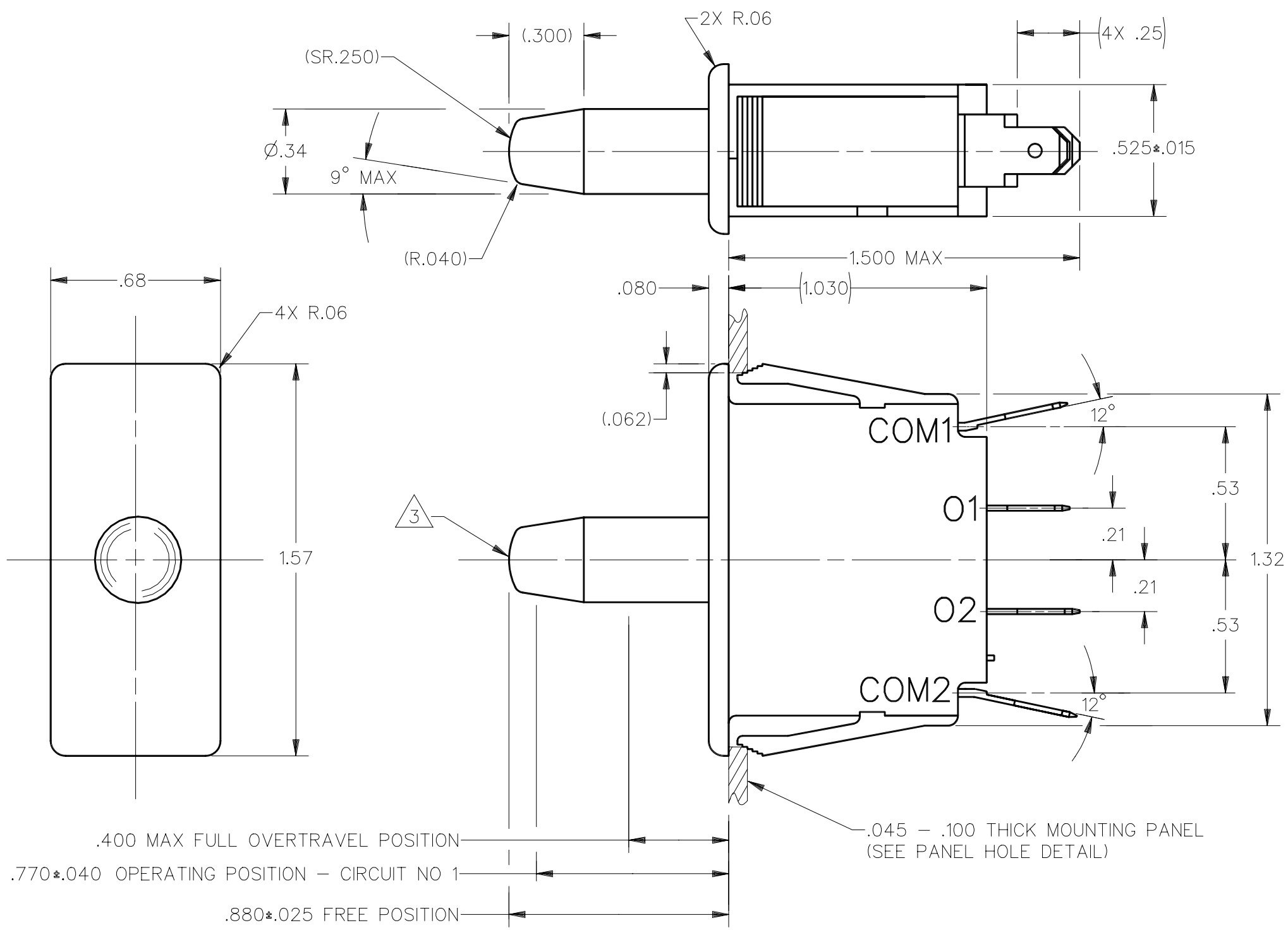

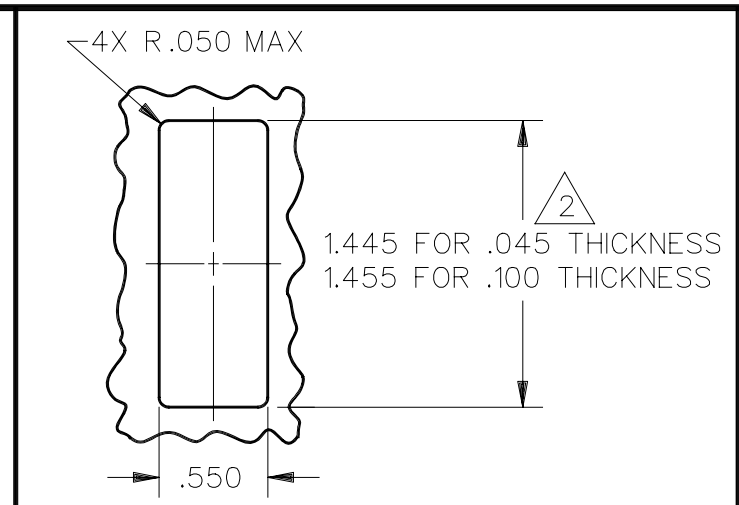

PANEL HOLE DETAIL
SCALE FULL

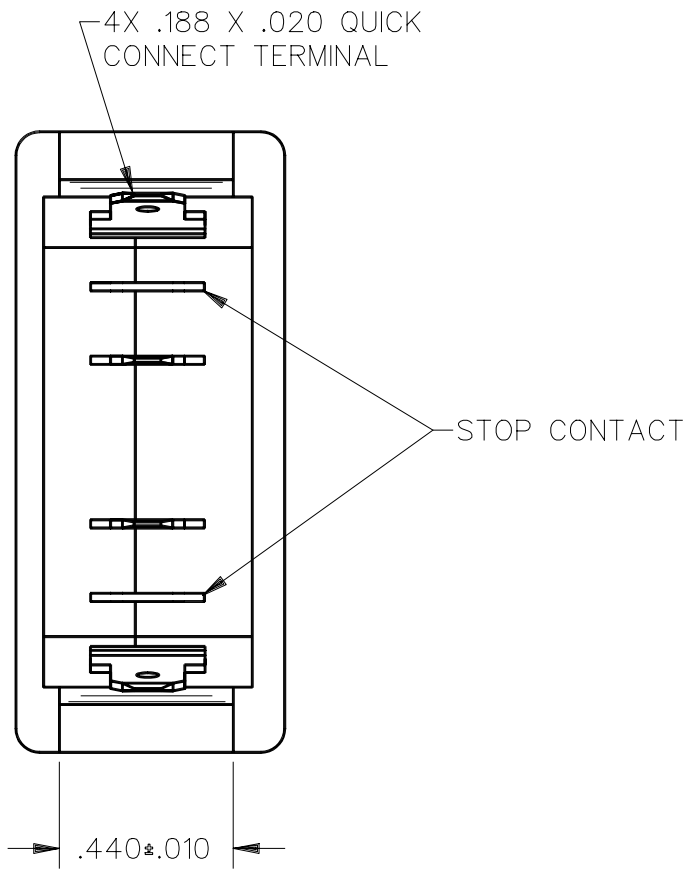

THIS DRAWING COVERS A PROPRIETARY ITEM AND IS THE PROPERTY OF MICRO SWITCH. A DIVISION OF HONEYWELL. THIS DRAWING IS NOT TO BE COPIED OR USED WITHOUT THE APPROVAL OF MICRO SWITCH

CHARACTERISTICS	ELECTRICAL DATA
OPERATING FORCE – – – – – 24 OZ MAX (TO OPERATE BOTH CIRCUITS)	CONTACT ARRANGEMENT S P N O (BOTH CKTS)
RELEASE FORCE – – – – – – – 6 OZ MIN (TO RELEASE BOTH CIRCUITS)	L181
DIFFERENTIAL TRAVEL – – .045 APPROX (EACH CIRCUIT)	10A 1/2HP 125, 250 OR 277 VAC

THIRD ANGLE PROJECTION

SCALE 2 TO 1

DO NOT SCALE PRINT

UNLESS OTHERWISE SPECIFIED TOLERANCES ARE

ONE PLACE	(.0)	±.030
TWO PLACE	(.00)	±.015
THREE PLACE	(.000)	±.005
ANGLES		± 5°

WEIGHT

NOTES
1 – BLACK PLASTIC CASE AND PLUNGER
2 NOMINAL CUTOUT DIMENSION FOR PANELS BETWEEN .045 AND .100 SHOULD BE INTERPOLATED BETWEEN 1.445 AND 1.455
3 PUSH TO OPERATE – MOMENTARY

ANSI Y14.5M–1982 APPLIES

CATALOG LISTING	2DM8
ISSUE	8
REPLACES	
RELEASE NO.	SR–11337
REVISIONS	A CO–72328 JWB 6 JAN 93
DRAWN	J W B 6 JAN 93
CHECK	
CHECK	
CHECK	
DDM/CAD	