THIS DRAWING CONTAINS INFORMATION PROPRIETARY TO POSITRONIC IND. INC. ANY REPRODUCTION, DISCLOSURE OR USE OF THIS DRAWING IS EXPRESSLY PROHIBITED, EXCEPT AS POSITRONIC IND. INC. MAY OTHERWISE AGREE IN WRITING.

DD15S10JVL0

DATE	REV	REVISION RECORD	APP	DR	CK
2-12-19	A	ECO 65038	RK	KV	PA

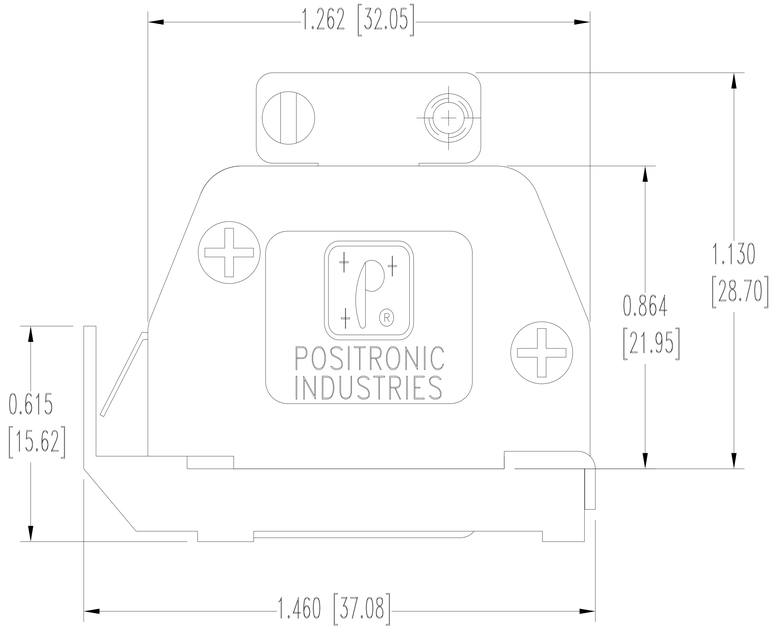

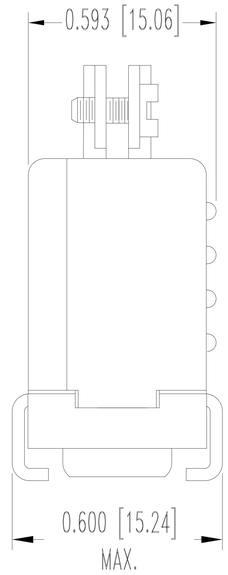

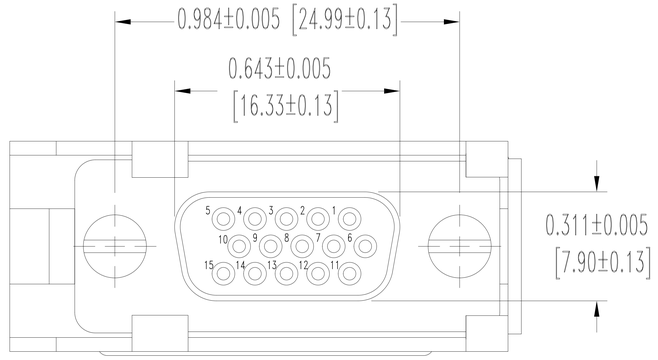

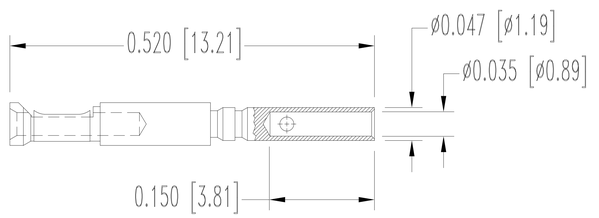

FEMALE CONTACT
15X (ENLARGED)

NOTES:

1. MATERIALS AND FINISHES:
   - INSULATOR: GLASS FILLED POLYESTER PER ASTM D5927, UL 94V-0, COLOR BLUE.
   - CONTACTS: PRECISION MACHINED COPPER ALLOY, GOLD FLASH OVER NICKEL FINISH.
   - SHELLS: STEEL, ZINC PLATE WITH CHROMATE SEAL.
   - HOOD AND COVER: GLASS FILLED NYLON, 94V-0, BLACK.
   - LOCK LEVER: STEEL, NICKEL PLATE.
   - LOCK ARM SPRING: BERYLLIUM COPPER, NICKEL PLATE.
   - CABLE CLAMPS: STEEL, NICKEL PLATE.
   - CABLE CLAMP SCREWS: BRASS, ZINC PLATE WITH CHROMATE SEAL.
   - COVER SCREWS: STEEL, ZINC PLATE WITH CHROMATE SEAL.
   - MOUNTING SCREWS: STEEL, ZINC PLATE WITH CHROMATE SEAL.
2. DETAILED PRODUCT, ELECTRICAL AND MECHANICAL INFORMATION IS AVAILABLE IN THE LATEST HIGH DENSITY D-SUB PRODUCT PUBLICATION AT CONNECTPOSITRONIC.COM
3. DIMENSIONS ARE IN INCHES [MILLIMETERS].

POSITRONIC INDUSTRIES INC.
SPRINGFIELD, MISSOURI 65806

DECIMAL TOL. ±0.015 [0.38]	DD SERIES	SCALE N.T.S.	DRAWN BY KV
			APPROVED BY RK
	TITLE DD15S10JVL0		
ANGULAR TOL. ± 5°	DATE 02-12-19	DRAWING NUMBER DD15S10JVL0	REV. A

Downloaded from Arrow.com.