XC62K Series

ETR0313_007a

Negative Voltage Regulators

■GENERAL DESCRIPTION

The XC62K series are highly precise, low power consumption, negative voltage regulators, manufactured using CMOS and laser trimming technologies. The series achieves high output currents with small input-output voltage differentials, and consists of a high precision voltage reference, an error correction circuit, and an output driver with current limitation.

SOT-23, SOT-89, USP-6B packages are available.

■APPLICATIONS

- ●Multi-function power supplies.
- ●Smart phones / Mobile phones.
- ●Mobile devices / terminals.

■FEATURES

Dropout Voltage : 0.12V@50mA (VOUT=-5.0V)
: 0.38V@100mA

Maximum Output Current : 100mA (within MAX. power dissipation, VOUT= -5.0V)

Output Voltage Range : -2.1V ~ -6.0V (0.1V increments)
-5.0, -4.0, -3.0V, -2.5V standard
(All other voltages are semi-custom)

Highly Accurate : Setting output voltage ±2%
(±1% for semi-custom products)

Low Power Consumption : 3.0μA @ VOUT= -5.0V (TYP.)

Output Voltage Temperature Characteristics
: ±100ppm/℃ (TYP.)

Line Regulation : 0.1%/V (TYP.)

CMOS Low Power Consumption

Packages : SOT-23
SOT-89
USP-6B

Environmentally Friendly : EU RoHS Compliant, Pb Free

■TYPICAL APPLICATION CIRCUIT

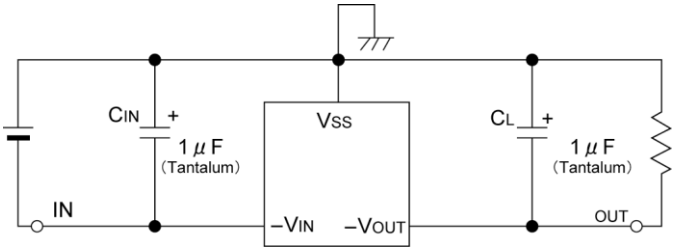

■ TYPICAL PERFORMANCE CHARACTERISTICS

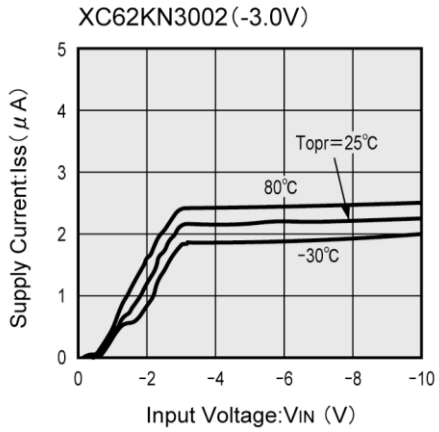

Downloaded from Arrow.com.

■PIN CONFIGURATION

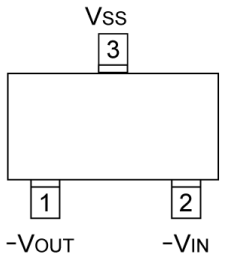

SOT-23
(TOP VIEW)

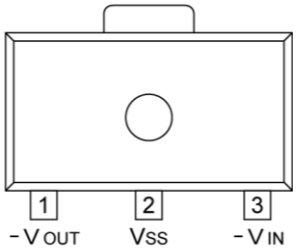

SOT-89
(TOP VIEW)

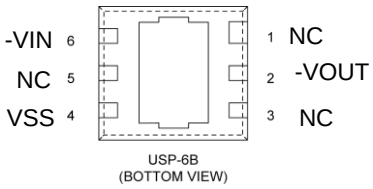

*The dissipation pad for the USP-6B package should be solder-plated in recommended mount pattern and metal masking so as to enhance mounting strength and heat release.
If the pad needs to be connected to other pins, it should be connected to the VSS pin.

■PIN ASSIGNMENT

PIN NUMBER			PIN NAME	FUNCTIONS
SOT-23	SOT-89	USP-6B		
2	3	6	-VIN	Power Supply Input
3	2	4	VSS	Ground
1	1	2	-VOUT	Output
-	-	1,3,5	NC	No Connection

■PRODUCT CLASSIFICATION

●Ordering Information

XC62K①②③④⑤⑥⑦-⑧ (*1)

MARK	ITEM	SYMBOL	DESCRIPTION
①	Polarity of Output Voltage	N	Negative
②③	Output Voltage	21 ~ 60	e.g. VOUT – 2.1V → ②=2, ③=1 VOUT – 6.0V → ②=6, ③=0
④	Temperature Characteristics	0	± 100ppm (TYP.)
⑤	Output Voltage Accuracy	1	± 1% (Semi-custom)
		2	± 2%
⑥⑦-⑧	Packages (Order Unit)	MR-G	SOT-23 (3,000pcs/Reel)
		PR-G	SOT-89 (1,000pcs/Reel)
		DR-G	USP-6B (3,000pcs/Reel)

(*1) The "-G" suffix denotes Halogen and Antimony free as well as being fully EU RoHS compliant.

Downloaded from Arrow.com.

■BLOCK DIAGRAM

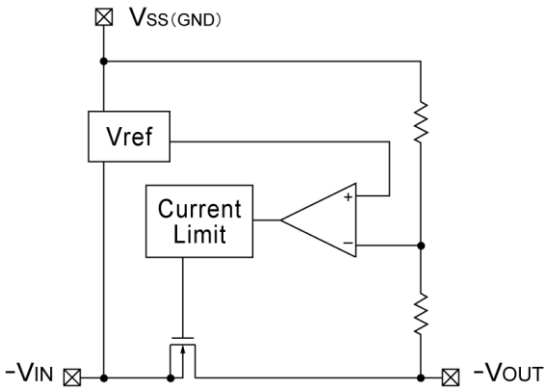

■ABSOLUTE MAXIMUM RATINGS

Ta=25℃

PARAMETER		SYMBOL	RATINGS	UNITS
Input Voltage		V_{IN}	-12.0	V
Output Current		I_{OUT}	200	mA
Output Voltage		V_{OUT}	$-V_{SS}$-0.3 ~ V_{IN}+0.3	V
Power Dissipation	SOT-23	Pd	150	mW
	SOT-89		500	
	USP-6B		100	
Operating Ambient Temperature		Topr	-40 ~ 85	℃
Storage Temperature		Tstg	-40 ~ 125	℃

Note: Please ensure that I_{OUT} is less than Pd/(V_{OUT}-V_{IN}).

Downloaded from Arrow.com.

■ELECTRICAL CHARACTERISTICS

Ta=25℃

PARAMETER	SYMBOL	CONDITIONS	MIN.	TYP.	MAX.	UNITS	CIRCUIT
Output Voltage	$V_{OUT(E)}$(*2)	I_{OUT}=20mA V_{IN}=$V_{OUT(T)}$(*1)-1.0V	E1-1(*4)	$V_{OUT(T)}$	E1-2(*4)	V	2
Maximum Output Current	I_{OUTmax}	V_{IN}=$V_{OUT(T)}$-1.0V $V_{OUT(E)}$≧$V_{OUT(T)}$×0.9	E2(*4)			mA	4
Load Regulation	ΔV_{OUT}	V_{IN}=$V_{OUT(T)}$－1.0V 1mA≦I_{OUT}≦{E3}mA	-	40	80	mV	4
Dropout Voltage	Vdif1(*3)	I_{OUT}={E4-1}(*4)mA	-	120	300	mV	3
	Vdif2(*3)	I_{OUT}={E4-2}(*4)mA	-	380	600		
Supply Current	I_{SS}	V_{IN}=$V_{OUT(T)}$-1.0V	-	E5-1(*4)	E5-2(*4)	μA	1
Line Regulation	ΔV_{OUT}/ (ΔV_{IN}・V_{OUT})	I_{OUT}=20mA V_{IN}≧$V_{OUT(T)}$-1.0V V_{IN}≦-10.0V	-	0.1	0.3	%V	3
Input Voltage	V_{IN}		-	-	-10.0	V	-
Output Voltage Temperature Characteristics	ΔV_{OUT}/ (ΔV_{IN}・V_{OUT})	I_{OUT}=20mA －40℃≦Topr≦85℃	-	±100	-	ppm/℃	-

*1: $V_{OUT(T)}$=Specified output voltage
*2: $V_{OUT(E)}$=Effective output voltage
i.e. the output voltage when "$V_{OUT(T)}$ -1.0V" is provided at the V_{IN} pin while maintaining a certain I_{OUT} value).
*3: Vdif1,Vdif2 =Vdif={V_{IN1}(*5) - V_{OUT1}(*4)}
V_{OUT1} =A voltage equal to 98% of the output voltage whenever an amply stabilized I_{OUT} {$V_{OUT(T)}$ -1.0V} is input.
V_{IN1}=The input voltage when a voltage equal to 98% of $V_{OUT(E)}$ appears.
*4: Refer to the “Voltage chart”.

Downloaded from Arrow.com.

■ELECTRICAL CHARACTERISTICS (Continued)

●Voltage Chart

SYMBOL	E1-1	E1-2	E1-1	E1-2	E2	E5-1	E5-2
PARAMETER / SETTING OUTPUT VOLTAGE(V)	OUTPUT VOLTAGE (V) (2% products)		OUTPUT VOLTAGE (V) (1% products)		MAXIMUM OUTPUT CURRENT (mA)	SUPPLY CURRENT1 (μA)	
$V_{OUT(T)}$	$V_{OUT(E)}$				I_{OUTmax}	I_{SS}	
	MIN	MAX	MIN	MAX	MIN	TYP	MAX
2.1	2.058	2.142	-	-	40	2.5	6.0
2.2	2.156	2.244	-	-	↑	↑	↑
2.3	2.254	2.346	-	-	↑	↑	↑
2.4	2.352	2.448	-	-	↑	↑	↑
2.5	2.450	2.550	2.475	2.525	↑	↑	↑
2.6	2.548	2.652	2.574	2.626	↑	↑	↑
2.7	2.646	2.754	2.673	2.727	↑	↑	↑
2.8	2.744	2.856	2.772	2.828	↑	↑	↑
2.9	2.842	2.958	2.871	2.929	↑	↑	↑
3.0	2.940	3.060	2.970	3.030	60	↑	↑
3.1	3.038	3.162	3.069	3.131	↑	↑	↑
3.2	3.136	3.264	3.168	3.232	↑	↑	↑
3.3	3.234	3.366	3.267	3.333	↑	↑	↑
3.4	3.332	3.468	3.366	3.434	↑	↑	↑
3.5	3.430	3.570	3.465	3.535	↑	↑	↑
3.6	3.528	3.672	3.564	3.636	↑	↑	↑
3.7	3.626	3.774	3.663	3.737	↑	↑	↑
3.8	3.724	3.876	3.762	3.838	↑	↑	↑
3.9	3.822	3.978	3.861	3.939	↑	↑	↑
4.0	3.920	4.080	3.960	4.040	80	3.0	6.5
4.1	4.018	4.182	4.059	4.141	↑	↑	↑
4.2	4.116	4.284	4.158	4.242	↑	↑	↑
4.3	4.214	4.386	4.257	4.343	↑	↑	↑
4.4	4.312	4.488	4.356	4.444	↑	↑	↑
4.5	4.410	4.590	4.455	4.545	↑	↑	↑
4.6	4.508	4.692	4.554	4.646	↑	↑	↑
4.7	4.606	4.794	4.653	4.747	↑	↑	↑
4.8	4.704	4.896	4.752	4.848	↑	↑	↑
4.9	4.802	4.998	4.851	4.949	↑	↑	↑
5.0	4.900	5.100	4.950	5.050	100	↑	7.0
5.1	4.998	5.202	5.049	5.151	↑	↑	↑
5.2	5.096	5.304	5.148	5.252	↑	↑	↑
5.3	5.194	5.406	5.247	5.353	↑	↑	↑
5.4	5.292	5.508	5.346	5.454	↑	↑	↑
5.5	5.390	5.610	5.445	5.555	↑	↑	↑
5.6	5.488	5.712	5.544	5.656	↑	↑	↑
5.7	5.586	5.814	5.643	5.757	↑	↑	↑
5.8	5.684	5.916	5.742	5.858	↑	↑	↑
5.9	5.782	6.018	5.841	5.959	↑	↑	↑
6.0	5.880	6.120	5.940	6.060	↑	↑	↑

●Conditions Chart

E3	E4-1	E4-2
LOAD REGULATION (mV)	DROPOUT VOLTAGE (mV)	
I_{OUT}	Vdif1	Vdif2
CONDITIONS	CONDITIONS	CONDITIONS
30	30	60
↑	↑	↑
↑	↑	↑
↑	↑	↑
↑	↑	↑
↑	↑	↑
↑	↑	↑
↑	↑	↑
↑	↑	↑
40	40	80
↑	↑	↑
↑	↑	↑
↑	↑	↑
↑	↑	↑
↑	↑	↑
↑	↑	↑
↑	↑	↑
↑	↑	↑
45	45	90
↑	↑	↑
↑	↑	↑
↑	↑	↑
↑	↑	↑
↑	↑	↑
↑	↑	↑
↑	↑	↑
↑	↑	↑
50	50	100
↑	↑	↑
↑	↑	↑
↑	↑	↑
↑	↑	↑
↑	↑	↑
↑	↑	↑
↑	↑	↑
↑	↑	↑
↑	↑	↑
↑	↑	↑

Note) The symbol is as same as that in the chart of electrical characteristics.

Downloaded from Arrow.com.

■TEST CIRCUITS

Circuit 1. Supply Current

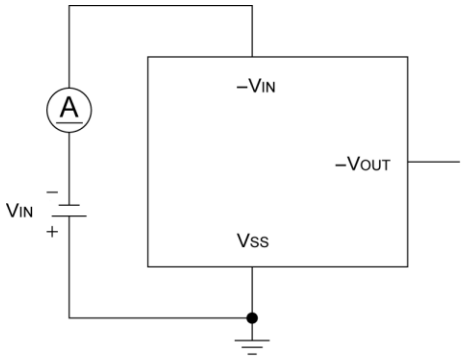

Circuit 2. Output Voltage

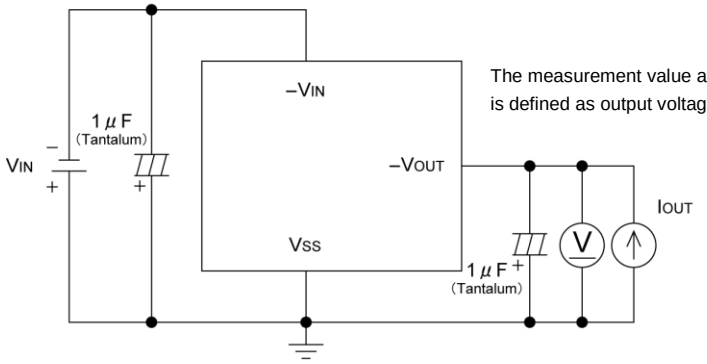

The measurement value at the time $V_{IN}=V_{OUT(T)}$(TYP.) -1V is defined as output voltage.

Circuit 3. Line Regulation Dropout Voltage

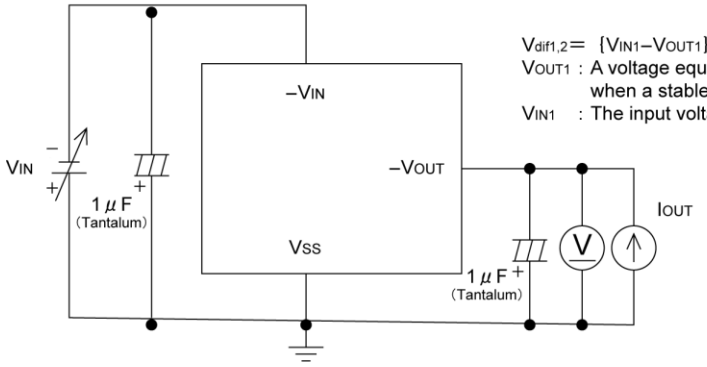

$V_{dif1,2}$= {V_{IN1}–V_{OUT1}}
V_{OUT1} : A voltage equal to 98% of output voltage when a stable 'set-up voltage - 1.0V ' is input.
V_{IN1} : The input voltage when V_{OUT1} is output.

Circuit 4. Load Regulation, Maximum Output Current

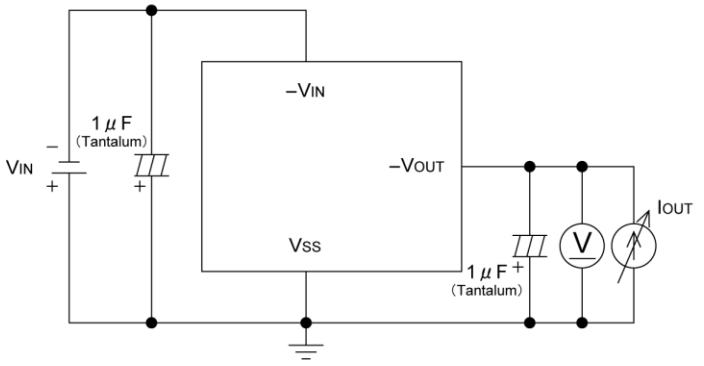

Downloaded from Arrow.com.

■NOTES ON USE

1) For the phenomenon of temporal and transitional voltage decrease or voltage increase, the IC may be damaged or deteriorated if IC is used beyond the absolute MAX. specifications.

2) Please ensure that values for input capacitance, C_{IN} and out capacitance, C_L, are more than 1 μF (Tantalum).

3) Torex places an importance on improving our products and their reliability.
We request that users incorporate fail-safe designs and post-aging protection treatment when using Torex products in their systems.

Downloaded from Arrow.com.

■TYPICAL PERFORMANCE CHARACTERISTICS

(1) Output Voltage vs. Output Current

XC62KN5002(-5.0V)

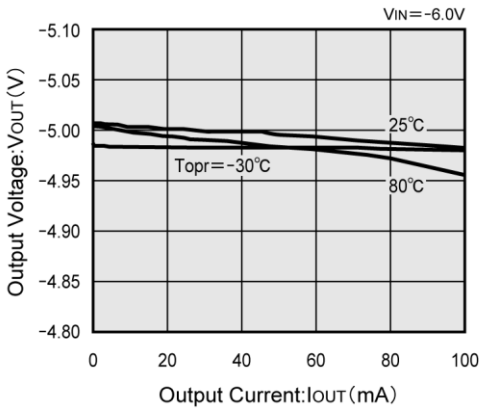

XC62KN5002(-5.0V)

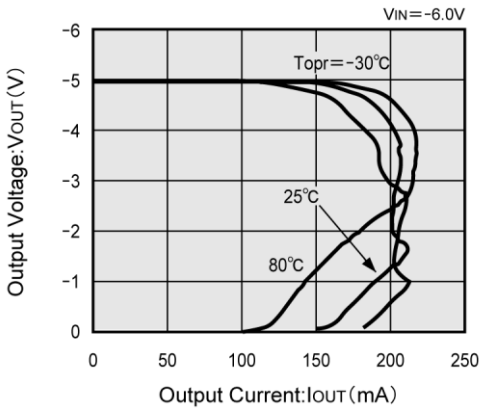

XC62KN4002(-4.0V)

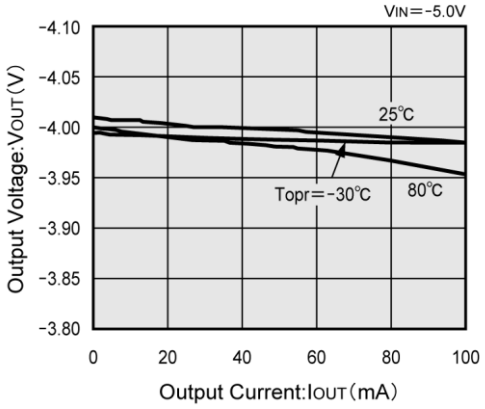

XC62KN4002(-4.0V)

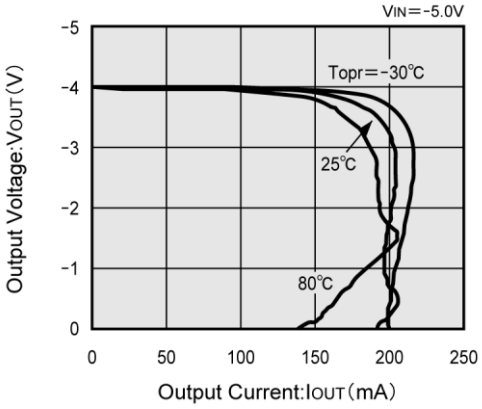

XC62KN3002 (-3.0V)

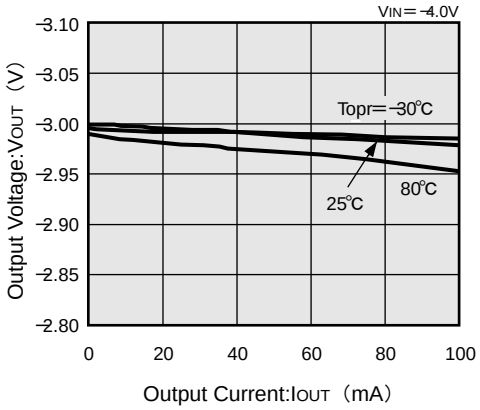

XC62KN3002(-3.0V)

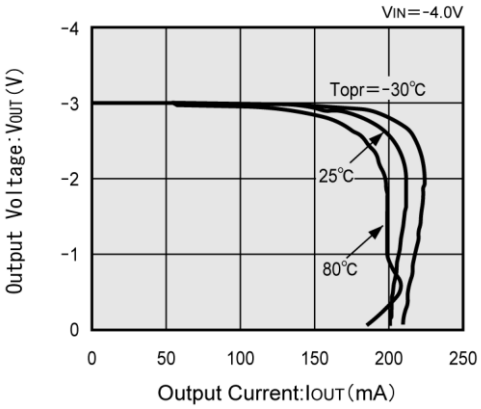

Downloaded from Arrow.com.

■TYPICAL PERFORMANCE CHARACTERISTICS (Continued)

(2) Output Voltage vs. Input Voltage

XC62KN5002（-5.0V）

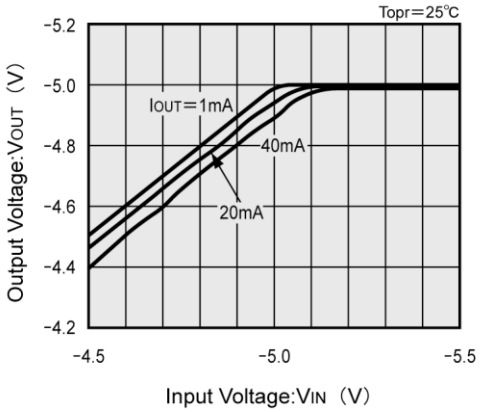

XC62KN5002（-5.0V）

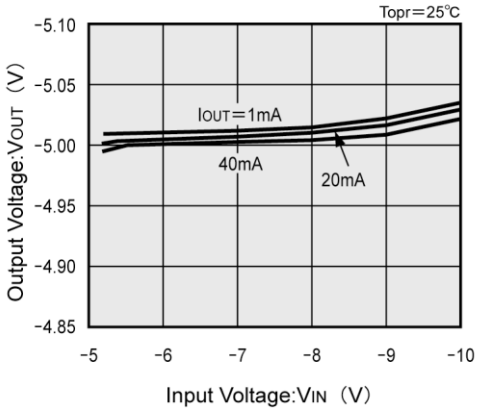

XC62KN4002（-4.0V）

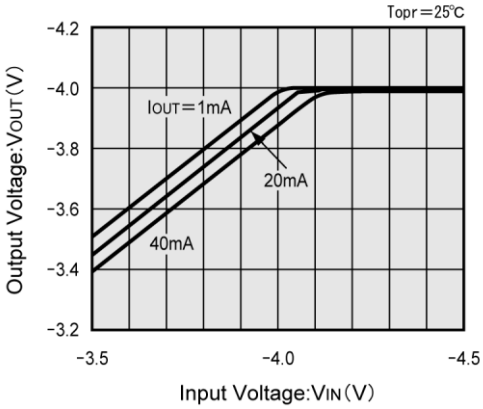

XC62KN4002(-4.0V)

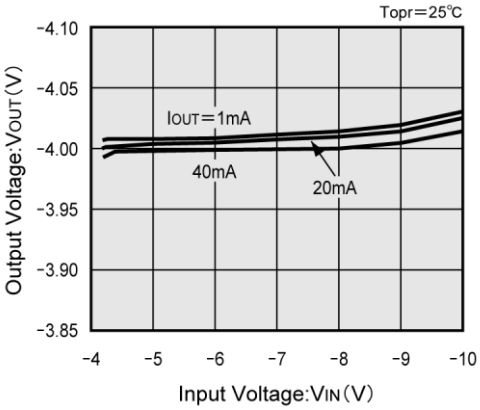

XC62KN3002（-3.0V）

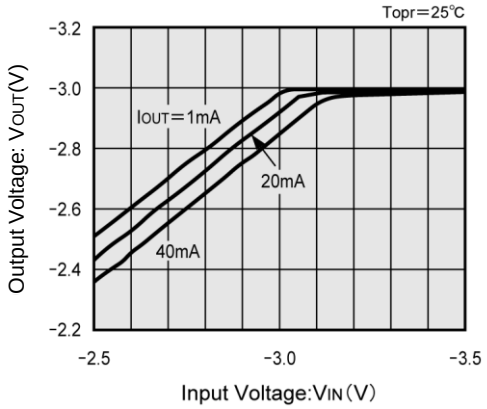

XC62KN3002（-3.0V）

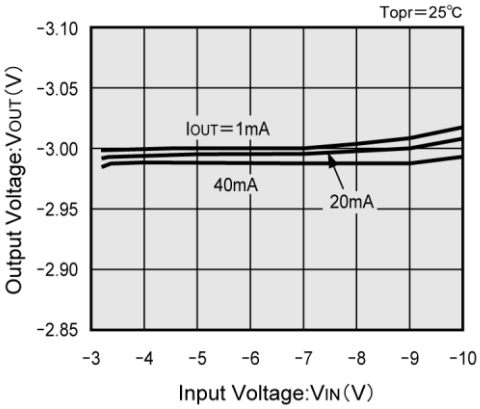

Downloaded from Arrow.com.

■TYPICAL PERFORMANCE CHARACTERISTICS (Continued)

(3) Dropout Voltage vs. Output Current

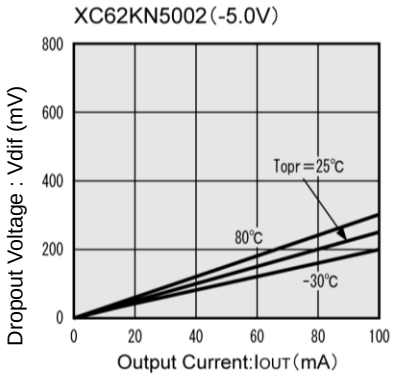

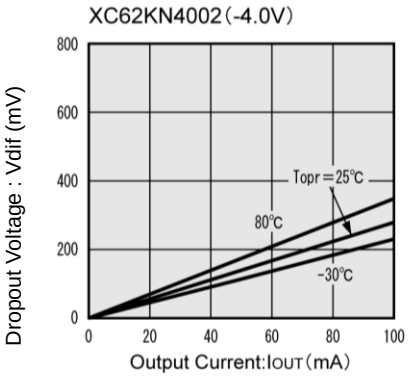

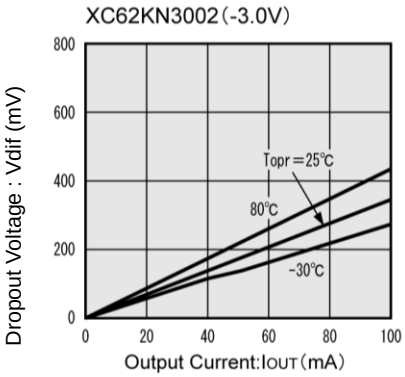

(4) Supply Current vs. Input Voltage

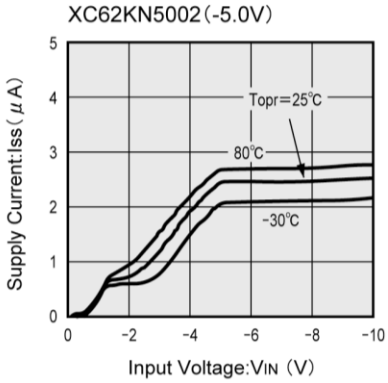

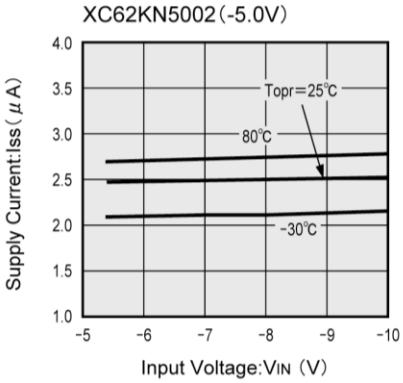

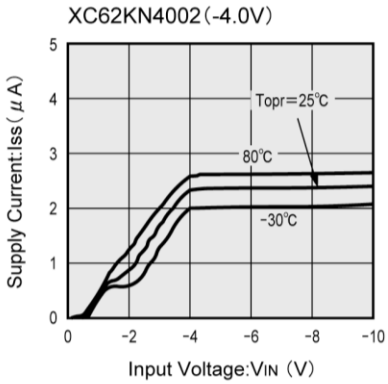

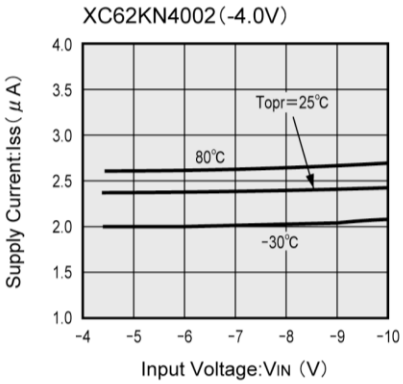

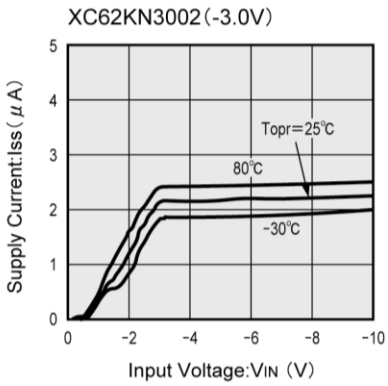

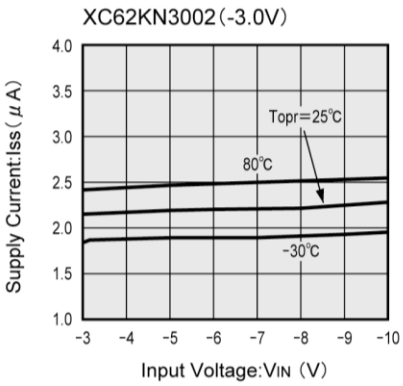

Downloaded from Arrow.com.

■TYPICAL PERFORMANCE CHARACTERISTICS (Continued)

(5) Output Voltage vs. Ambient Temperature

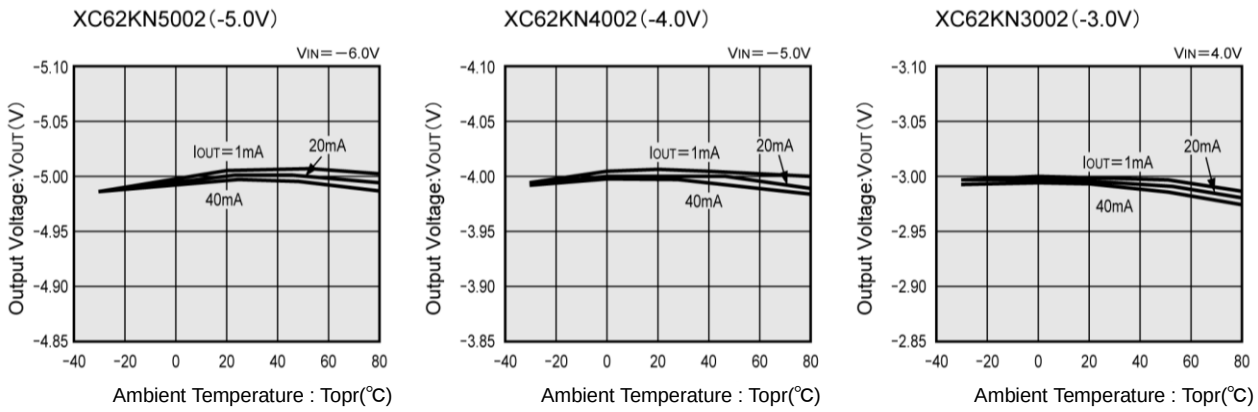

(6) Supply Current vs. Ambient Temperature

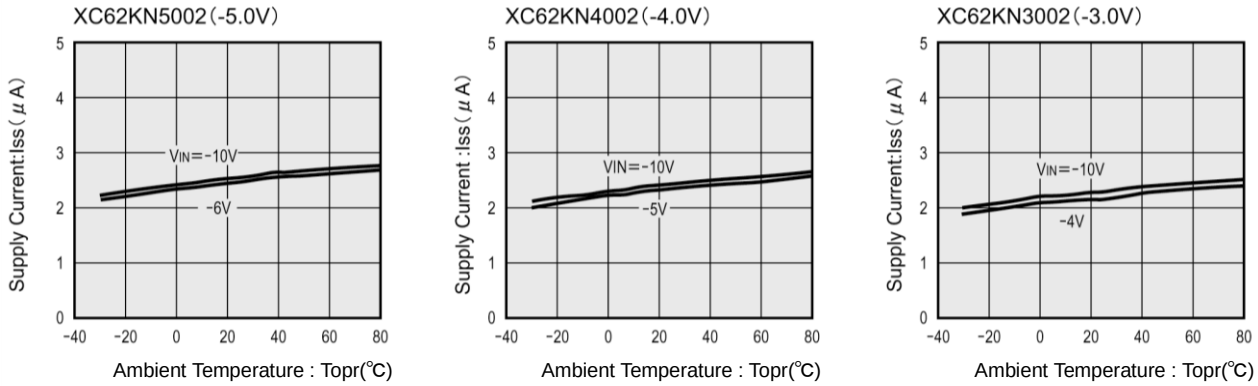

(7) Input Transient Response 1

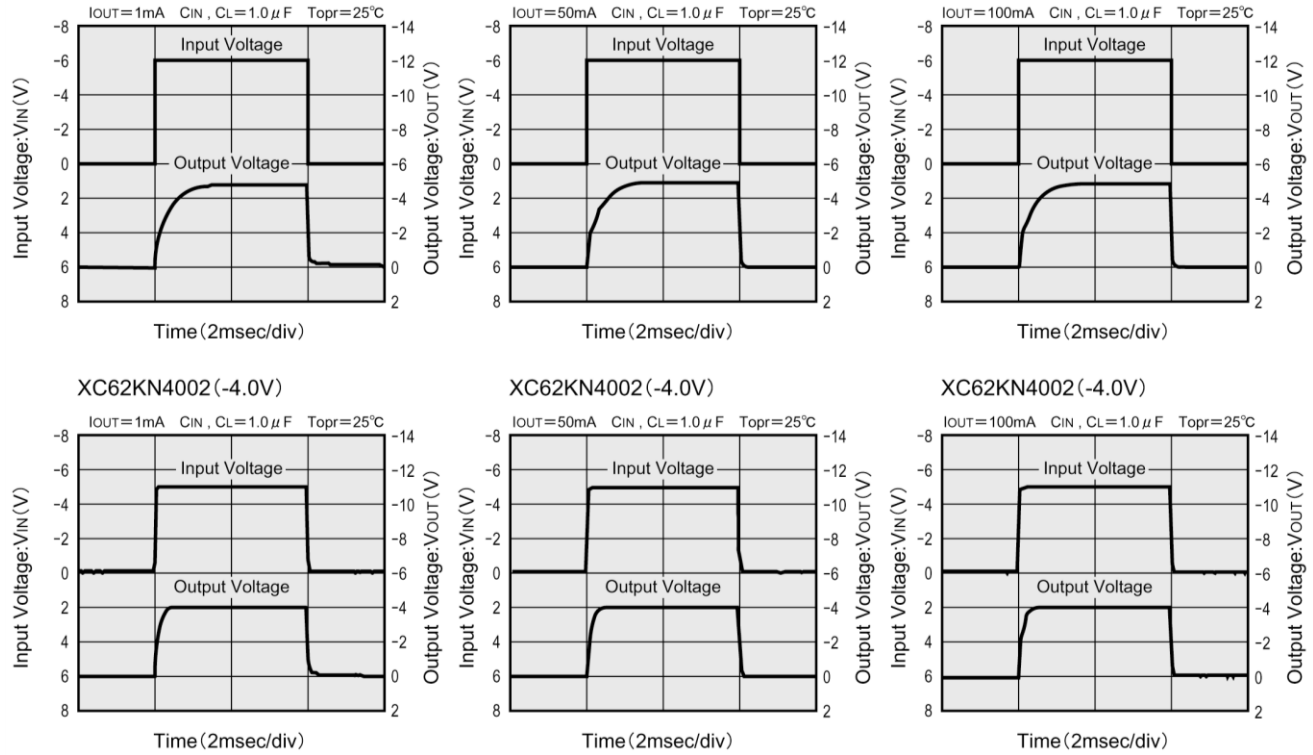

Downloaded from Arrow.com.

■TYPICAL PERFORMANCE CHARACTERISTICS (Continued)

(7) Input Transient Response 1

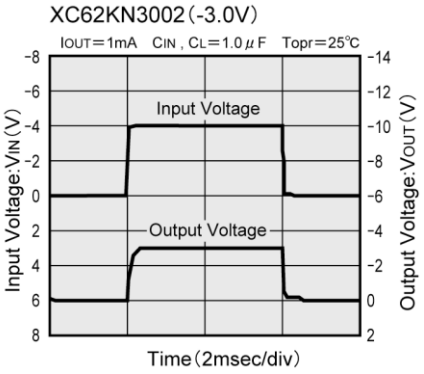

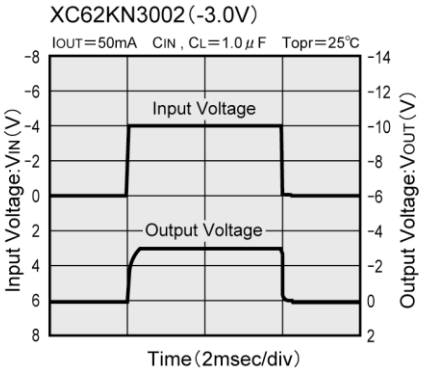

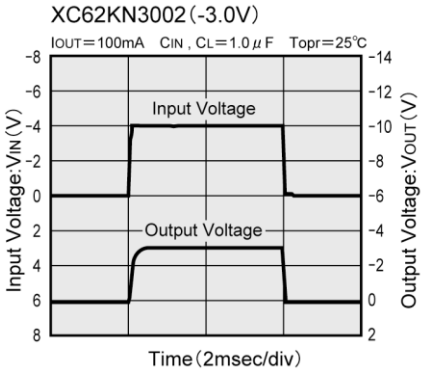

(8) Input Transient Response 2

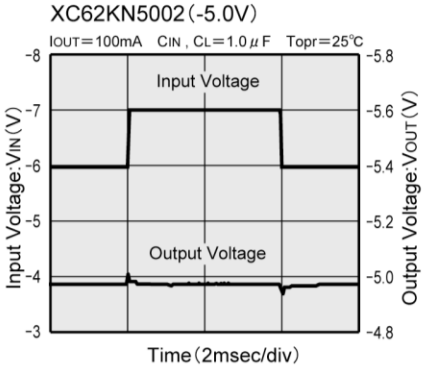

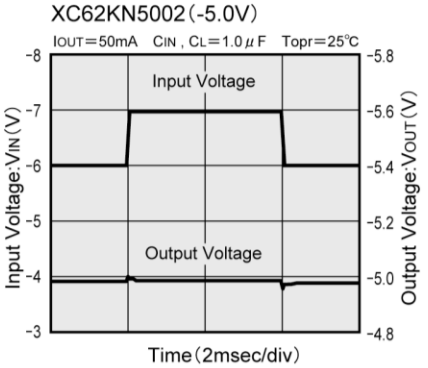

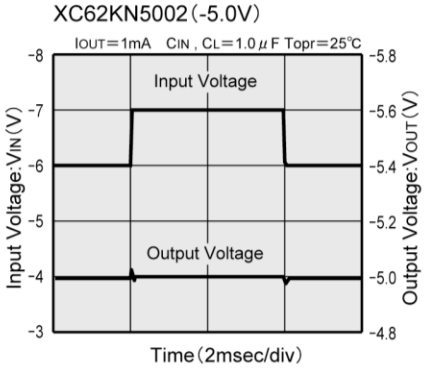

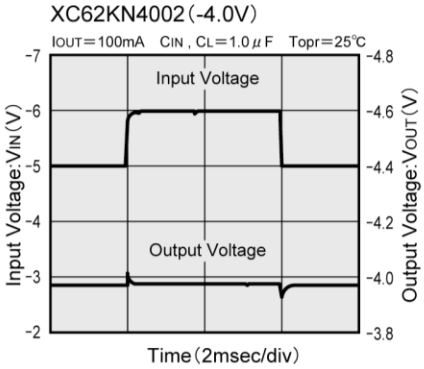

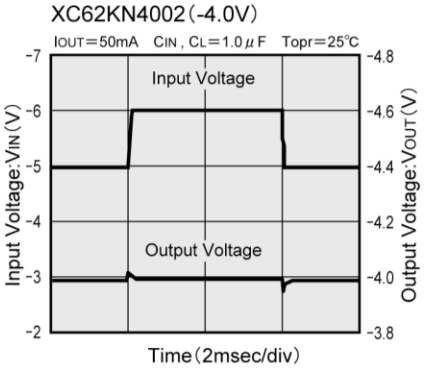

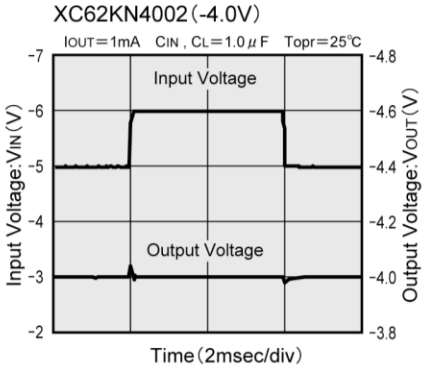

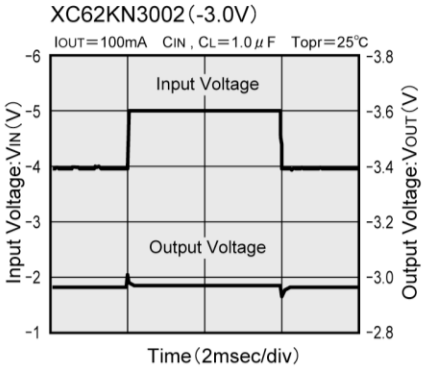

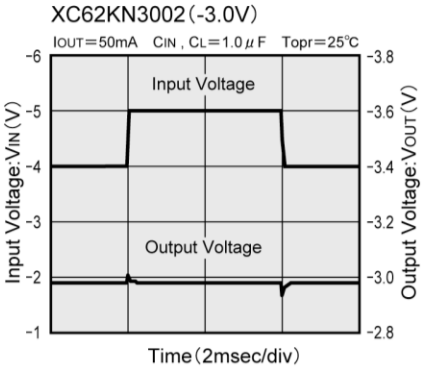

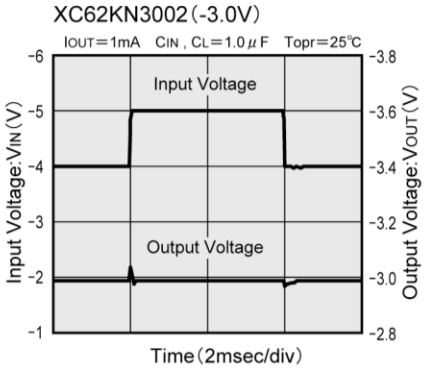

Downloaded from Arrow.com.

■TYPICAL PERFORMANCE CHARACTERISTICS (Continued)

(9) Load Transient Response

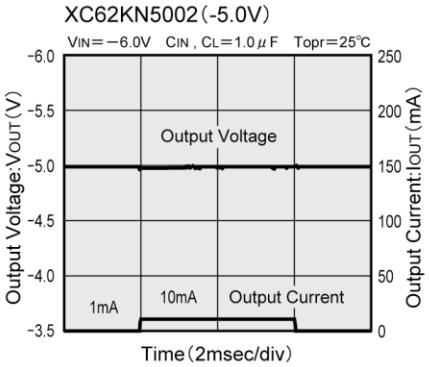

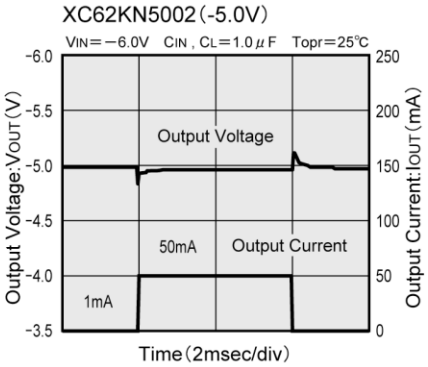

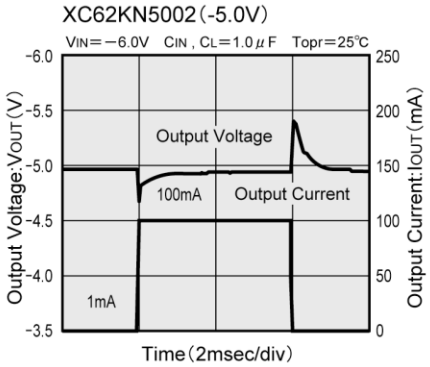

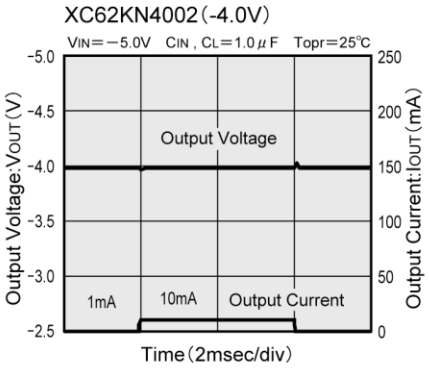

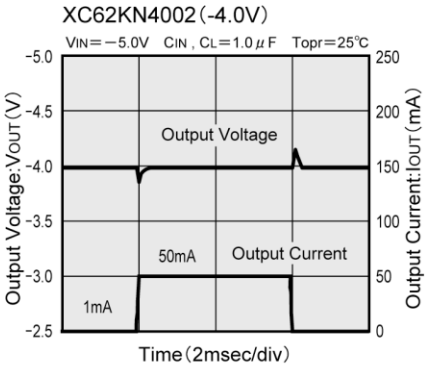

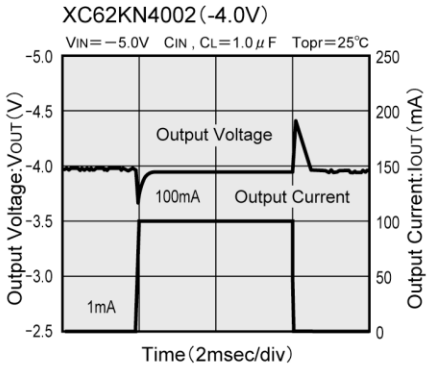

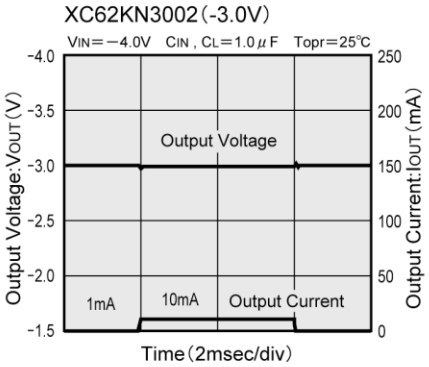

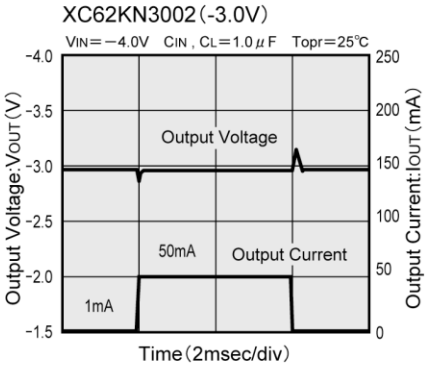

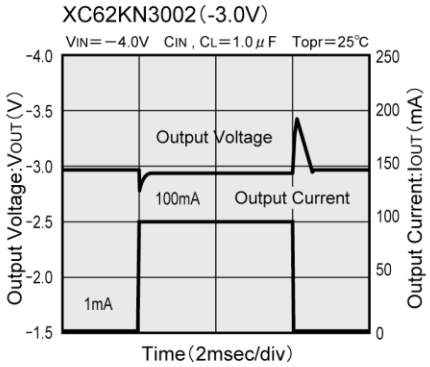

(10) Ripple Rejection Rate

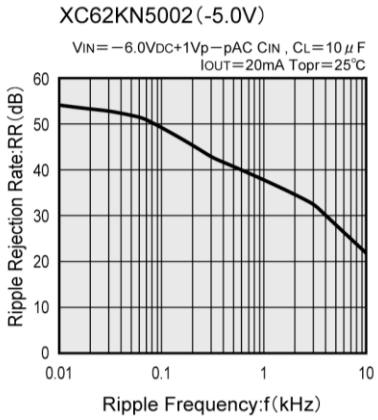

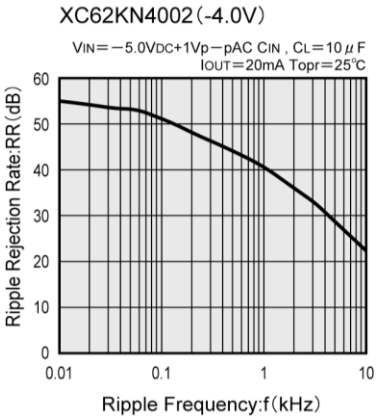

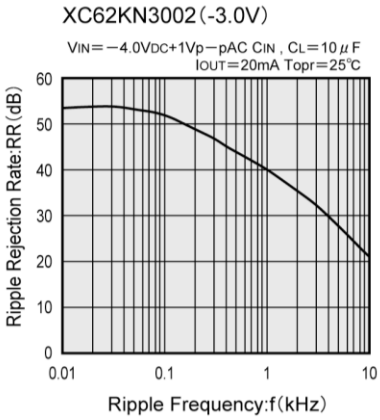

Downloaded from Arrow.com.

■PACKAGING INFORMATION

For the latest package information, please visit www.torex.co.jp/technical-support/packages/

PACKAGE	OUTLINE / LAND PATTERN	THERMAL CHARACTERISTICS
SOT-23	SOT-23 PKG	SOT-23 Power Dissipation
SOT-89	SOT-89 PKG	SOT-89 Power Dissipation
USP-6B	USP-6B PKG	USP-6B Power Dissipation

Downloaded from Arrow.com.

■ MARKING RULE

●SOT-23, SOT-89

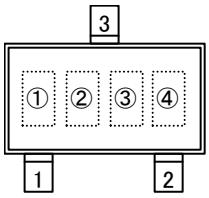

SOT-23
(TOP VIEW)

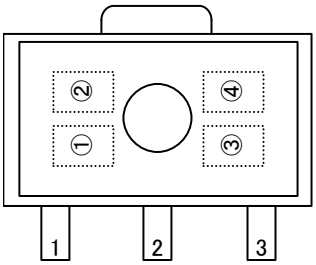

SOT-89
(TOP VIEW)

① represents integral number of output voltage

MARK	VOLTAGE (V)	MARK	VOLTAGE (V)
2	2.X	5	5.X
3	3.X	6	6.X
4	4.X		

② represents decimal number of output voltage

MARK	VOLTAGE (V)	MARK	VOLTAGE (V)
A	x.0	F	x.5
B	x.1	H	x.6
C	x.2	K	x7
D	x.3	L	x.8
E	x.4	M	x.9

③ represents polarity of output voltage

MARK	POLARITY
5	Negative

④ represents production lot number
0 to 9, A to Z repeated, reverse character 0 to 9, A to Z repeated
(G, I, J, O, Q, W excluded)

●USP-6B

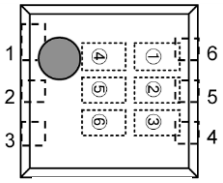

USP-6B
(TOP VIEW)

① represents production series

MARK	PRODUCT SERIES
K	XC62KNxx0xDx

② represents polarity of output voltage

MARK	POLARITY	PRODUCT SERIES
N	−(Negative)	XC62KNxx0xDx

③④ represents output voltage (ex.)

MARK		VOLTAGE (V)	PRODUCT SERIES
③	④		
3	3	3.3	XC62KN330xDx
5	0	5.0	XC62KN500xDx

⑤ represents temperature characteristics

MARK	TEMPERATURE CHARACTERISTICS	PRODUCT SERIES
0	± 100 ppm (TYP.)	XC62KNxx0xDx

⑥ represents production lot number
0 to 9, A to Z repeated (G, I, J, O, Q, W excluded)
Note: No character inversion used.

Downloaded from Arrow.com.

1. The product and product specifications contained herein are subject to change without notice to improve performance characteristics. Consult us, or our representatives before use, to confirm that the information in this datasheet is up to date.

2. The information in this datasheet is intended to illustrate the operation and characteristics of our products. We neither make warranties or representations with respect to the accuracy or completeness of the information contained in this datasheet nor grant any license to any intellectual property rights of ours or any third party concerning with the information in this datasheet.

3. Applicable export control laws and regulations should be complied and the procedures required by such laws and regulations should also be followed, when the product or any information contained in this datasheet is exported.

4. The product is neither intended nor warranted for use in equipment of systems which require extremely high levels of quality and/or reliability and/or a malfunction or failure which may cause loss of human life, bodily injury, serious property damage including but not limited to devices or equipment used in 1) nuclear facilities, 2) aerospace industry, 3) medical facilities, 4) automobile industry and other transportation industry and 5) safety devices and safety equipment to control combustions and explosions. Do not use the product for the above use unless agreed by us in writing in advance.

5. Although we make continuous efforts to improve the quality and reliability of our products; nevertheless Semiconductors are likely to fail with a certain probability. So in order to prevent personal injury and/or property damage resulting from such failure, customers are required to incorporate adequate safety measures in their designs, such as system fail safes, redundancy and fire prevention features.

6. Our products are not designed to be Radiation-resistant.

7. Please use the product listed in this datasheet within the specified ranges.

8. We assume no responsibility for damage or loss due to abnormal use.

9. All rights reserved. No part of this datasheet may be copied or reproduced unless agreed by Torex Semiconductor Ltd in writing in advance.

TOREX SEMICONDUCTOR LTD.

Downloaded from Arrow.com.