EOL-Last Buy Date is July 31, 2024
Not recommended for new applications

Type 5MF / 5MFP

Fast Blow Fuse Series

HF Pb 5MF/5MFP Series, 5x20mm Glass Tube Fast Blow Fuse RoHS Compliant

Description

5x20mm Fast Blow, glass tube body cartridge fuse designed, approved and complied with UL and CSA standard 248-14.

Features

- Meet UL and CSA standard 248-14
- Wide operating temperature range
- Bulk and Tape & Reel packing available
- Full compliance with EU Directive 2011/65/EU and amending directive 2015/863
- Halogen Free
- Lead Free

Applications

Provide individual protection for components or internal circuits.

- Power supplies
- Battery charger
- Monitor
- Adapter

LEAD FREE = Pb
HALOGEN FREE = HF

Physical Specifications

Materials	Body : Glass
	Cap: Nickel Plated Brass Caps
	Leads: Matte Tin Plated Copper
Marking	On Fuse :
	“bel”, ”5MF”, ”Current Rating”, “Voltage Rating”,
	”Appropriate Safety Logos”, ” ✓ ” （ RoHS compliant）
	On Label :
	"bel", "5MF"or"5MFP", "Current Rating", "Voltage Rating", "Interrupting Rating", "Appropriate Safety Logos" and " ", " "(China RoHS compliant).

Electrical Characteristics (UL/CSA STD.248-14)

Testing Current	Blow Time	
	Minimum	Maximum
100%	4 Hrs.	N/A
135%	N/A	1 Hr.
200%	N/A	5 sec

Safety Agency Approvals

Safety Agency	Safety Agency Certificate	Ampere Rating/ Voltage Rating	Ampere Range / Volt @ I.R. ability*
	E20624	400mA-3A/250V AC	400mA-3A/250V AC@200A 400mA-8A/125V AC@10,000A
	LR39772	3.15A-8A/125V AC	
*I.R.= Interrupting Rating = Short Circuit Rating(Amps)			

Specifications subject to change without notice

bel POWER SOLUTIONS & PROTECTION
a bel group

belfuse.com/circuit-protection

Please read our datasheet & drawing disclaimer here.

Downloaded from Arrow.com.

Environmental Specifications

Shock Resistance	MIL-STD-202G, Method 213B, Test Condition 1 (100 G's peak for 6 milliseconds; Sawtooth waveform)
Vibration Resistance	MIL-STD-202G, Method 201A (10-55 Hz, 0.06 inch, total excursion).
Salt Spray Resistance	MIL-STD-202G, Method 101E, Test Condition B (48 hrs).
Insulation Resistance	MIL-STD-202G, Method 302, Test Condition A (After Opening) 10,000 ohms minimum.
Solderability	MIL-STD-202G, Method 208H
Resistance to solder Heat	MIL-STD-202G, Method 210F, Test Condition B (260+/-5℃,10+/-1 sec)
Thermal Shock	MIL-STD-202G, Method 107G, Test Condition B (-65℃ to +125℃).
Operating Temperature	-55℃ to +125℃
Terminal Strength	IEC-68-2-21

Electrical Specifications

Catalog Number	Ampere Rating	Typical Cold Resistance (ohms)	Volt-drop @100%In (Volt) max.	Voltage and Interrupting Ratings	Melting I²T <10 mSec (A² Sec)	Melting I²T @10 In (A² Sec)	Maximum Power Dissipation (W)	Agency Approvals	
5MF(P) 400-R	400mA	0.65	0.74	See Table of Safety Approvals on Page 1 for Voltage and associated Interrupting Ratings	0.080	0.084	0.20	Y	Y
5MF(P) 500-R	500mA	0.49	0.78		0.122	0.118	0.33	Y	Y
5MF(P) 600-R	600mA	0.394	0.77		0.195	0.195	0.44	Y	Y
5MF(P) 700-R	700mA	0.305	0.73		0.265	0.267	0.65	Y	Y
5MF(P) 800-R	800mA	0.243	0.61		0.40	0.40	0.54	Y	Y
5MF(P) 1-R	1A	0.118	0.22		0.88	0.85	0.26	Y	Y
5MF(P) 1.25-R	1.25A	0.085	0.21		1.5	1.5	0.31	Y	Y
5MF(P) 1.5-R	1.5A	0.067	0.17		2.6	2.6	0.36	Y	Y
5MF(P) 2-R	2A	0.046	0.16		4.4	4.5	0.44	Y	Y
5MF(P) 2.5-R	2.5A	0.037	0.16		7.6	7.8	0.52	Y	Y
5MF(P) 3-R	3A	0.030	0.17		13	14	0.59	Y	Y
5MF(P) 3.5-R	3.5A	0.025	0.15		17	18	0.65	Y	Y
5MF(P) 4-R	4A	0.019	0.14		22	24	0.72	Y	Y
5MF(P) 5-R	5A	0.016	0.15		38	41	0.84	Y	Y
5MF(P) 6-R	6A	0.012	0.13		65	72	0.96	Y	Y
5MF(P) 7-R	7A	0.011	0.13		88	97	1.10	Y	Y
5MF(P) 8-R	8A	0.009	0.13		113	126	1.23	Y	Y

Consult manufacturer for other ratings

bel POWER SOLUTIONS & PROTECTION
a bel group

Bel Fuse Inc.
300 Executive Drive, Suite 300,
West Orange, NJ 07052 USA

+1 201.432.0463
Bel.US.CS@belf.com
belfuse.com/circuit-protection

© 2023 Bel Fuse, Inc.

Downloaded from Arrow.com.

EOL-Last Buy Date is July 31, 2024
Not recommended for new applications

Temperature Derating Curve

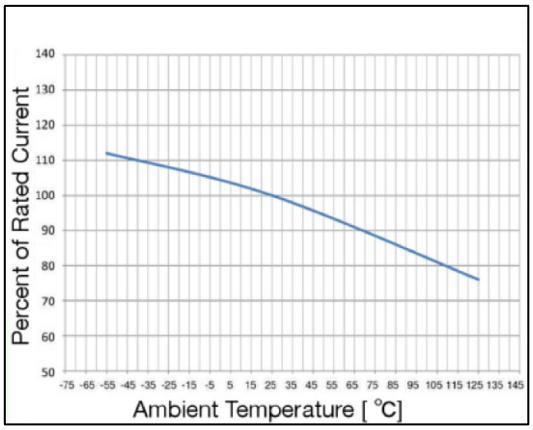

Average Time Current Curve

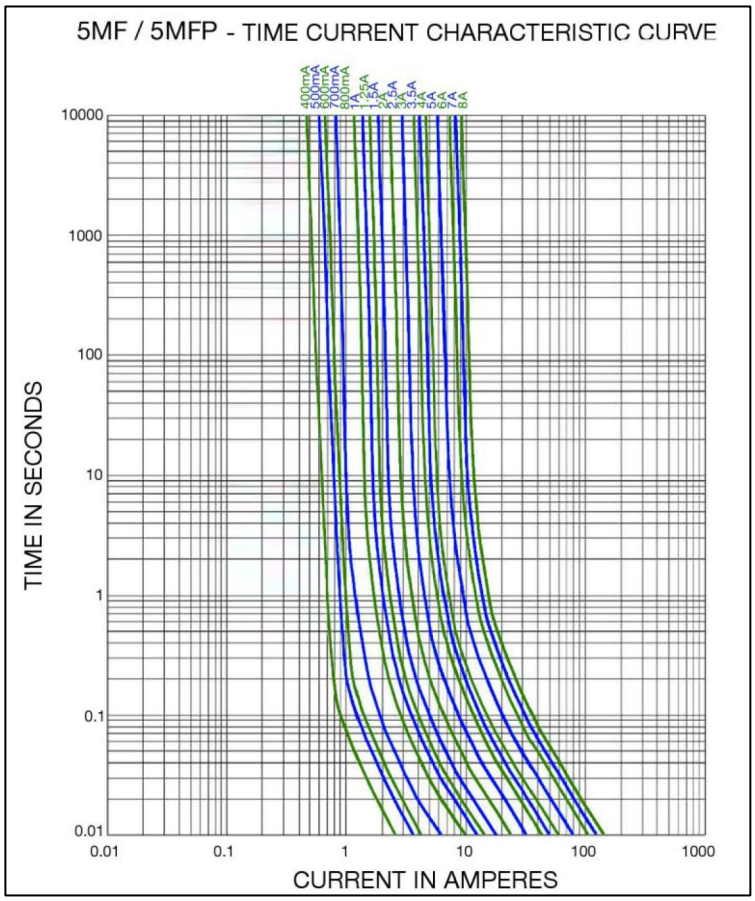

Soldering Parameters

Lead-free Wave Soldering Profile	
Wave Soldering Parameter	
Average ramp-up rate	200℃ / second
Heating rate during preheat	typical 1 - 2℃ / second Max 4℃ / second
Final preheat temperature	within 125℃ of soldering temperature
Peak temperature Tp	260℃
Time within +0℃ / -5℃ of actual peak temperature	10 seconds
Ramp-down rate	5℃ / second max.

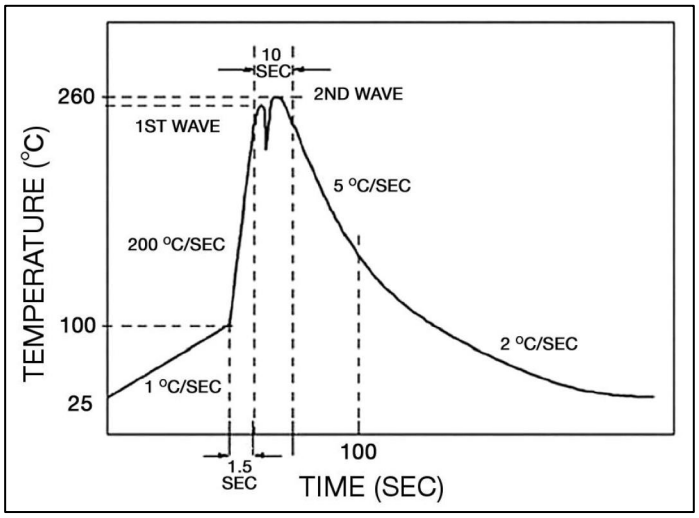

Specifications subject to change without notice

Bel Fuse Inc.
300 Executive Drive, Suite 300,
West Orange, NJ 07052 USA

+1 201.432.0463
Bel.US.CS@belf.com
belfuse.com/circuit-protection

© 2023 Bel Fuse, Inc.

Downloaded from Arrow.com.

EOL-Last Buy Date is July 31, 2024
Not recommended for new applications

Fuse FGNO Explanation
0651 R [XXXX] -XX
[XXXX]=Ampere Rating; XX=See Ordering Information as below

Fraction	Decimal	Milliamps	Bel FGNO[XXXX]
4/10	.400	400	0400
1/2	.500	500	0500
6/10	.600	600	0600
7/10	.700	700	0700
8/10	.800	800	0800

Fraction	Decimal	Amps	Bel FGNO[XXXX]
	1.0	1	1000
1-1/4	1.25	1.25	1250
1-1/2	1.50	1.5	1500
	2.0	2	2000
2-1/2	2.5	2.5	2500
	3.0	3	3000
3-1/2	3.5	3.5	3500
	4.0	4	4000
	5.0	5	5000
	6.0	6	6000
	7.0	7	7000
	8.0	8	8000

Mechanical Dimensions

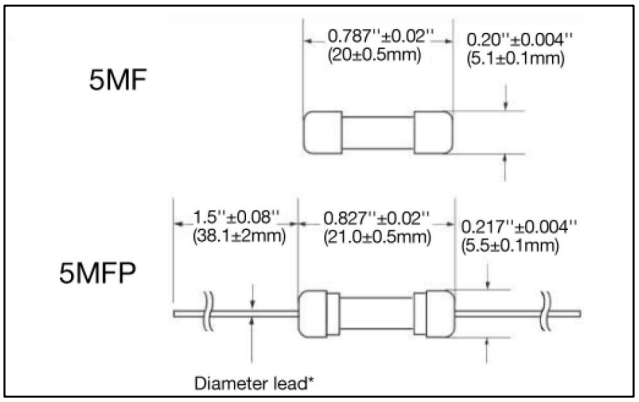

*Ratings 5A and less have 0.032"±0.002″ diameter lead;
*Ratings 6A and above have 0.039"±0.002″ diameter lead.

Ordering Information

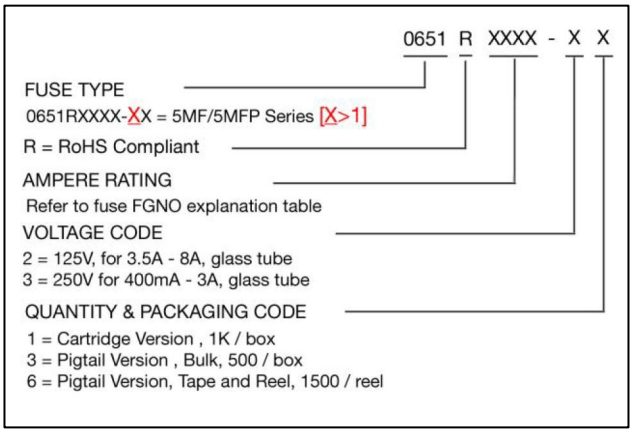

Packaging

Packaging Option	Packaging Specification	Quantity	Packaging Code	Inside Tape Spacing
Bulk	N/A	1000	31 / 21	N/A
Bulk (Pigtail Type)	N/A	500	33 / 23	N/A
Tape & Reel	EIA-296-F	1500	73 / 26	10mm Pitch and 63mm

Bel Fuse Inc.
300 Executive Drive, Suite 300,
West Orange, NJ 07052 USA

+1 201.432.0463
Bel.US.CS@belf.com
belfuse.com/circuit-protection

© 2023 Bel Fuse, Inc.

Downloaded from Arrow.com.