Data Sheet | Item Number: 704-2024

Interface module for system wiring; Pluggable connector per DIN 41651; Male connector; 20-pole; 16-channel digital input or output; 2-wire connection; in mounting carrier

https://www.wago.com/704-2024

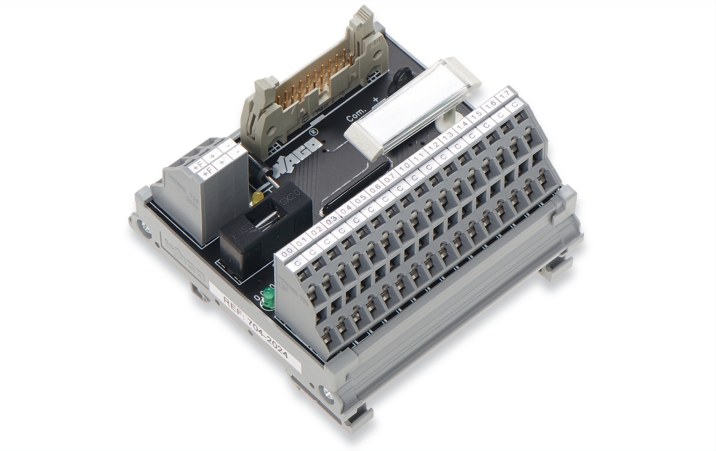

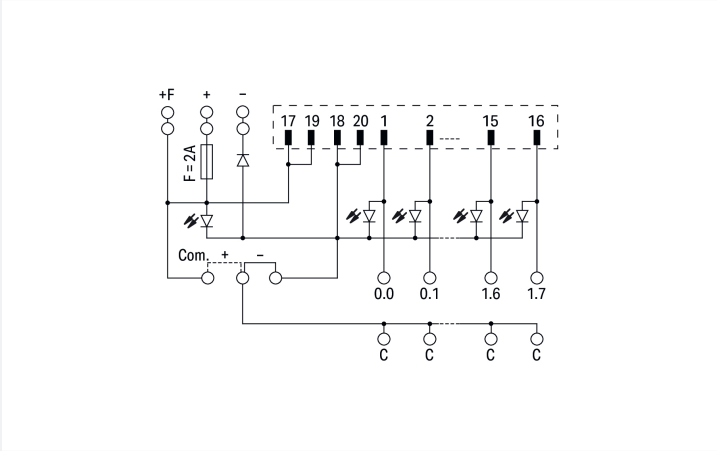

Electrical data

Inputs/outputs	16-channel digital input or output
Circuit type	2-wire connection
Nominal operating voltage	24 VDC
Operating voltage range	±10 %
Current consumption (status indication)	5 mA
Total current	2 A
Limiting continuous current	1 A
Status indicator	Green LED (channel) Yellow LED (power supply)
Internal fuse	2 A

Safety and protection

Rated Voltage	50 V
Rated impulse withstand voltage	0.8 kV
Pollution degree	2

Compatibility

GE Fanuc

GE Fanuc 9030	IC693 MDL241 IC693 MDL640 IC693 MDL643 IC693 MDL645 IC693 MDL646 IC693 MDL655 IC693 MDL740 IC693 MDL742 IC693 MDL753
GE Fanuc RX3i	IC694 MDL655 IC694 MDL753

Downloaded from Arrow.com.

Schneider

Schneider Modicon TM3	TM3 DI16(G) TM3 DI16K TM3 DI32K TM3 DQ16T(G) TM3 DQ16TK TM3 DQ32TK
Schneider Modicon M340	BMX DDI 1602 BMX DDI 3202K BMX DDI 6402K BMX DDO 1602 BMX DDO 3202K BMX DDO 6402K BMX DDM 3202K
Schneider Modicon Quantum	140 DDI 353 00 140 DDI 364 00 140 DDO 353 00 140 DDO 353 01 140 DDO 364 00 140 DDM 390 00 140 DSI 353 00 140 DVO 853 00
Schneider TSX	TSX DEY 16D2 TSX DEY 16FK TSX DEY 32D2K TSX DEY 64D2K TSX DMY 28FK TSX DMY 28RFK TSX DSY 16T2 TSX DSY 32T2K TSX DSY 64T2K TSX DMZ 28DT TSX DMZ 28DTK TSX DMZ 64DTK TSX DSZ 32T2 TSX DEZ 12D2K TSX DEZ 32D2
Schneider Twido	TM2 DDI 16DK TM2 DDI 32DK TM2 DDO 16TK TM2 DDO 32TK

Rockwell

Rockwell Compact Logix	1769 - IQ16 1769 - IQ16F 1769 - IQ32 1769 - IQ32T 1769 - OB16 1769 - OB16P 1769 - OB32 1769 - OB32T
Rockwell Control Logix	1756 - IB16I 1756 - IB16ISOE 1756 - IB32 1756 - OB16E 1756 - OB16I 1756 - OB16IS 1756 - OB32

Omron

Omron CJ1W	CJ1W-ID211 CJ1W-ID231 CJ1W-ID232 CJ1W-ID261 CJ1W-ID262 CJ1W-IDP01 CJ1W-INT01 CJ1W-MD232 CJ1W-OD212 CJ1W-OD232 CJ1W-OD262

WAGO

WAGO I/O System 750	750-1400 750-1500 750-1502
WAGO I/O System 753	753-430 (x2) 753-431 (x2) 753-530 (x2)

Connection Data

Connection 1

Pluggable connector	Pluggable connector per DIN 41651; male connector
Pole number 1	20
Connection type	System
Note (conductor cross-section)	12 AWG: THHN, THWN
Mating direction	vertical

Connection 2

Design	PCB terminal blocks (double-deck)
Pole number	32
Connection type	Field
WAGO connector	WAGO 736 Series
Solid conductor	0.08 … 2.5 mm² / 28 … 12 AWG
Fine-stranded conductor	0.08 … 2.5 mm² / 28 … 12 AWG
Strip length	5 … 6 mm / 0.2 … 0.24 inches

Downloaded from Arrow.com.

Connection 3	
Design	PCB terminal blocks (double-deck)
Pole number	6
Connection type	Power supply
WAGO connector	WAGO 736 Series
Solid conductor	0.08 … 2.5 mm² / 28 … 12 AWG
Fine-stranded conductor	0.08 … 2.5 mm² / 28 … 12 AWG
Strip length	5 … 6 mm / 0.2 … 0.24 inches

Physical data	
Width	85 mm / 3.346 inches
Height	85 mm / 3.346 inches
Depth from upper-edge of DIN-rail	50 mm / 1.969 inches

Mechanical data	
Mounting type	DIN-35 rail

Material data	
Fire load	1.599 MJ
Weight	112.3 g

Environmental requirements	
Ambient temperature (operation)	-20 … +50 °C
Ambient temperature (storage)	-40 … +70 °C
Relative humidity	≤ 85 % (non-condensing)

Commercial data	
Product Group	30 (WAGO France)
PU (SPU)	1 pcs
Packaging type	Box
Country of origin	FR
GTIN	4050821220657
Customs tariff number	85366990990

Product Classification	
UNSPSC	39121421
eCl@ss 10.0	27-14-11-52
eCl@ss 9.0	27-14-11-52
ETIM 9.0	EC002780
ETIM 10.0	EC002780
ECCN	NO US CLASSIFICATION

Downloaded from Arrow.com.

Environmental Product Compliance

RoHS Compliance Status	Compliant,No Exemption

Downloads

Environmental Product Compliance

Compliance Search

Environmental Product Compliance 704-2024

Documentation

Bid Text

704-2024	19.02.2019	xml 3.77 KB	
704-2024	20.11.2015	doc 25.50 KB	

CAD/CAE-Data

CAD data

2D/3D Models 704-2024

CAE data

EPLAN Data Portal 704-2024

WSCAD Universe 704-2024

ZUKEN Portal 704-2024

1 Compatible Products

1.1 Optional Accessories

1.1.1 Cables and connectors

1.1.1.1 Connecting cable

Item No.: 706-100/1300-200
Connection cable; 20-pole; Pluggable connector per DIN 41651; open-ended; Length: 2 m; Conductor cross-section: 0.14 mm²; UR components

Item No.: 706-100/1300-400
Connection cable; 20-pole; Pluggable connector per DIN 41651; open-ended; Length: 4 m; Conductor cross-section: 0.14 mm²; UR components

Downloaded from Arrow.com.

1.1.1.2 System cable

Item No.: 706-2300/300-100
System cable; for Siemens S7-300; 16 digital inputs or outputs; Length: 1 m; Conductor cross-section: 0.14 mm²

Item No.: 706-2300/300-200
System cable; for Siemens S7-300; 16 digital inputs or outputs; Length: 2 m; Conductor cross-section: 0.14 mm²

Item No.: 706-2300/300-300
System cable; for Siemens S7-300; 16 digital inputs or outputs; Length: 3 m; Conductor cross-section: 0.14 mm²

Item No.: 706-2300/101-100
System cable; for Siemens S7-300; 16 digital inputs; Length: 1 m; Conductor cross-section: 0.34 mm²

Item No.: 706-2300/101-200
System cable; for Siemens S7-300; 16 digital inputs; Length: 2 m; Conductor cross-section: 0.34 mm²

Item No.: 706-2300/101-300
System cable; for Siemens S7-300; 16 digital inputs; Length: 3 m; Conductor cross-section: 0.34 mm²

Item No.: 706-2300/301-100
System cable; for Siemens S7-300; 2 x 16 digital inputs or outputs; Length: 1 m; Conductor cross-section: 0.14 mm²

Item No.: 706-2300/301-200
System cable; for Siemens S7-300; 2 x 16 digital inputs or outputs; Length: 2 m; Conductor cross-section: 0.14 mm²

Item No.: 706-2300/301-300
System cable; for Siemens S7-300; 2 x 16 digital inputs or outputs; Length: 3 m; Conductor cross-section: 0.14 mm²

Item No.: 706-2300/100-100
System cable; for Siemens S7-300; 2 x 16 digital inputs; Length: 1 m; Conductor cross-section: 0.34 mm²

Item No.: 706-2300/100-200
System cable; for Siemens S7-300; 2 x 16 digital inputs; Length: 2 m; Conductor cross-section: 0.34 mm²

Item No.: 706-2300/100-300
System cable; for Siemens S7-300; 2 x 16 digital inputs; Length: 3 m; Conductor cross-section: 0.34 mm²

Item No.: 706-2300/200-100
System cable; for Siemens S7-300; 2 x 16 digital outputs; Length: 1 m; Conductor cross-section: 0.14 mm²

Item No.: 706-2300/200-200
System cable; for Siemens S7-300; 2 x 16 digital outputs; Length: 2 m; Conductor cross-section: 0.14 mm²

Item No.: 706-2300/200-300
System cable; for Siemens S7-300; 2 x 16 digital outputs; Length: 3 m; Conductor cross-section: 0.14 mm²

Item No.: 706-7753/301-200
System cable; for WAGO-I/O-SYSTEM, 753 Series; 2 x 16 digital inputs or outputs; Length: 2 m; Conductor cross-section: 0.14 mm²

1.1.2 Marking

1.1.2.1 Marking strip

Item No.: 709-196
Marking strips; for laser printer; translucent

Item No.: 2009-110
Marking strips; for Smart Printer; on reel; not stretchable; plain; snap-on type; white

Item No.: 709-177
Marking strips; on reel; 7.5 mm wide; not stretchable; plain; snap-on type; translucent

Item No.: 709-178
Marking strips; on reel; 7.5 mm wide; not stretchable; plain; snap-on type; white

Downloaded from Arrow.com.