Product data sheet
Subminiature connectors

Product description	**M9 Male cable connector, Contacts: 4, 3.5-5.0 mm, unshielded, solder, IP67**
Area	**M9 IP67**
Series	**712**
Part no.	**99 0409 00 04**

Illustration (may vary)



Scale drawing

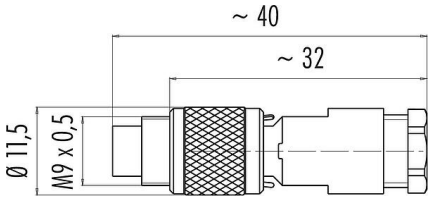

Contact arrangement (Plug-in side)

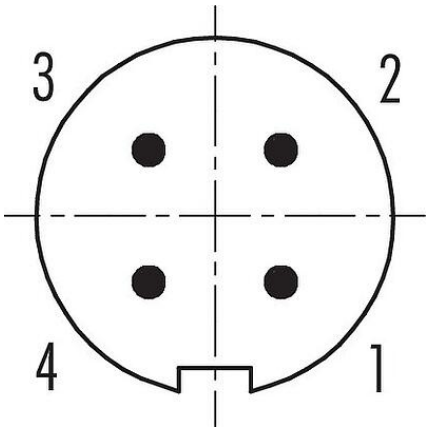

You can find the assembly instructions on the next page.

Technical data

General features

Part no.	99 0409 00 04
Connector design	Male cable connector
Version	Connector pin straight
Connector locking system	screw
Termination	solder
Degree of protection	IP67
Connection cross-section	max. 0.25 mm² / AWG 24
Cable outlet	3.5-5.0 mm
Temperature range from/to	-40 °C / 85 °C
Mechanical operation	> 500 Mating cycles
Weight (g)	6.14
Customs tariff number	85369010
Country of Origin	DE

Electrical parameters

Rated voltage	125 V
Rated impulse voltage	1500 V
Rated current	3,0 A
Insulation resistance	≥ 10^8 Ω
Pollution degree	1
Overvoltage category	II
Insulating material group	III
EMC compliance	unshielded

Downloaded from Arrow.com.

Product data sheet
Subminiature connectors

Product description	**M9 Male cable connector, Contacts: 4, 3.5-5.0 mm, unshielded, solder, IP67**
Area	**M9 IP67**
Series	**712**
Part no.	**99 0409 00 04**

Material

Housing material	PA/CuZn (Nickel-plated brass)
Contact body material	PBT (UL94 V-0)
Contact material	CuZn (brass)
Contact plating	Au (gold)
Locking material	CuZn (brass)
REACH SVHC	CAS 7439-92-1 (Lead)
SCIP number	e62b8b93-c25f-4cb3-8721-6d41d8939ef0

Classifications

eCl@ss 11.1	27-44-01-02
ETIM 9.0	EC002635

Declarations of conformity

Low Voltage Directive	EN 60529:1991

Assembly instructions

1. *Bead pressing screw, pinch ring, seal and snap bush to cable.*
2. *Dismantle cable to min. 10 and max. 12 mm length.*
3. *Strip and solder single wires.*
4. *Screw snap bush with contact insert.*
5. *Push the assembled part into the coupling ring and screw the coupling ring with the snap bush.*
6. *Push seal and pinch ring into snap bush and tighten pressing screw.*
7. *Snap coupling ring onto snap bush.*

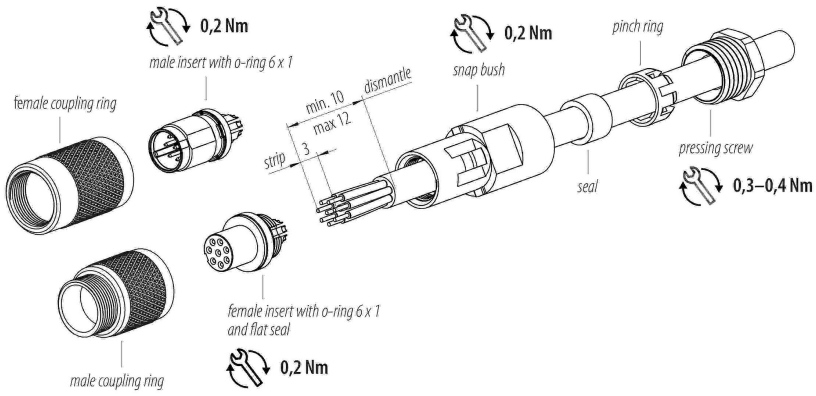

Date: 04.11.2026

Downloaded from Arrow.com.

Product data sheet
Subminiature connectors

Product description	**M9 Male cable connector, Contacts: 4, 3.5-5.0 mm, unshielded, solder, IP67**
Area	**M9 IP67**
Series	**712**
Part no.	**99 0409 00 04**

General Disclaim Notice

The connector must not be plugged or unplugged under load. Non-observance and improper use can result in personal injury.

The connectors have been developed for applications in plant engineering, control and electrical equipment construction. The user is responsible for checking whether the connectors can also be used in other areas of application.

To protect against unintentional opening of the connector, the thread between the housing and the connector head must be secured with a suitable cyanoacrylate adhesive when used in circuits with voltages dangerous to the touch. This does not apply to connectors used in SELV and PELV circuits according to IEC 61140 (EN 61140, VDE 0140-1).

Connectors which are used in circuits with voltages dangerous to the touch may only be installed and used by, or under the supervision of, persons with electrical engineering training, taking into account the applicable regulations and standards.

The user must take suitable safety precautions to ensure that the connector cannot be accidentally disconnected.

Plug connectors with enclosure protection IP67 and IP68 are not suitable for use under water. When used outdoors, the plug connectors must be protected separately against corrosion. For further information on the IP protection classes, please refer to the "Technical Information" download centre.

Please observe the pollution degree and the overvoltage category. For further information, please refer to the download center "Technical Information".

Downloaded from Arrow.com.