RoHS COMPLIANT

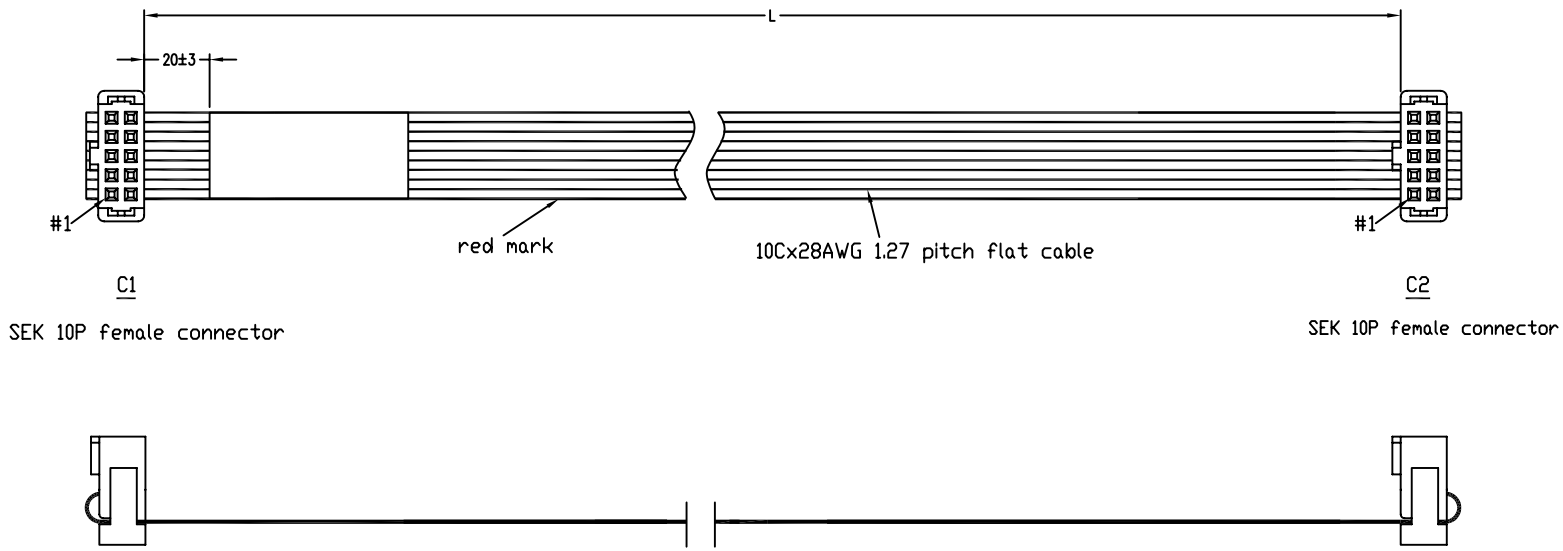

TOLERANCE FOR "L" LENGTH

DIMENSION RANGE	TOLERANCE
0.0m – 1.0m	+10/0 mm
>1.0m – 3.0m	+30/0 mm
>3.0m – 5.0m	+50/0 mm
>5.0m – 10.0m	+100/0 mm
>10.0m	+200/0 mm

NOTES:

1.) CABLE MUST BE PERFORMED 100% CONTINUITY TEST.

2.) WHITE LABEL CONTENT:

CWK/YR-XXXXX-X-XX
HARTING P/N

BLACK FONT; FONT HEIGHT: 3.5.

3.) CABLE SHOULD BE FOLDED MANY CIRCLES ACCORDING TO TOTAL CABLE LENGTH AND PACKED BY A PLASTIC BAG (QTY ACCORDING TO ACTUAL CONDITION),STICK THE LABEL WITH P/N,QTY AND LOT NUMBER ON IT,THEN PUT IT INTO THE CARTON (QTY ACCORDING TO ACTUAL CONDITION).

4.) THE CARTON SHOULD BE STICKED THE LABEL WITH P/N AND QTY CONTENT.

Part-No.	Dim.L
33 18 243 100 0067	1 m
33 18 243 080 0066	0.8 m
33 18 243 050 0065	0.5 m
33 18 243 020 0064	0.2 m
33 18 243 010 0063	0.1 m

All Dimensions in mm
Original Size DIN A 3

Techn. Character.

	Dat.	Name
Detail.	03.07.08	Aaron
Insp.		
Stand.		

Scale: /

Free size tolerances

SEK 10P FEMALE DOUBLE END
FLAT CABLE ASSEMBLY,L=xM

ZHUHAI HARTING LIMITED

TB 33 18 243 xxx 00xx

Sub.

Page /

Mod. | Dat. | Name

Downloaded from Arrow.com.