SERIES: VYC30W | DESCRIPTION: DC-DC CONVERTER

FEATURES

- up to 30 W output
- industry standard pinout
- 4:1 input range (9~36 V, 18~75 V)
- single, dual, and triple outputs
- 1,500 V isolation
- short circuit, over current, and over voltage protection
- wide temperature operation (-40~85°C)
- efficiency up to 88%



RoHS

DISCONTINUED

MODEL	input voltage range (Vdc)	output voltage (Vdc)	output current max (A)	output power max (W)	ripple and noise[1] max (mVp-p)	efficiency typ (%)
VYC30W-Q24-S5	9 ~ 36	5	6	30	120	87
VYC30W-Q24-S12	9 ~ 36	12	2.5	30	120	88
VYC30W-Q24-S15	9 ~ 36	15	2	30	120	87
VYC30W-Q24-D5	9 ~ 36	±5	3	30	120	86
VYC30W-Q24-D12	9 ~ 36	±12	1.25	30	120	88
VYC30W-Q24-D15	9 ~ 36	±15	1	30	120	87
VYC30W-Q24-T312	9 ~ 36	3.3 ±12	4 ±0.625	28.2	120	85
VYC30W-Q24-T315	9 ~ 36	3.3 ±15	4 ±0.5	28.2	120	85
VYC30W-Q24-T512	9 ~ 36	5 ±12	3 ±0.625	30	120	86
VYC30W-Q24-T515	9 ~ 36	5 ±15	3 ±0.5	30	120	86
VYC30W-Q48-S5	18 ~ 75	5	6	30	120	87
VYC30W-Q48-S12	18 ~ 75	12	2.5	30	120	88
VYC30W-Q48-S15	18 ~ 75	15	2	30	120	87
VYC30W-Q48-D5	18 ~ 75	±5	3	30	120	86
VYC30W-Q48-D12	18 ~ 75	±12	1.25	30	120	88
VYC30W-Q48-D15	18 ~ 75	±15	1	30	120	87
VYC30W-Q48-T312	18 ~ 75	3.3 ±12	4 ±0.625	28.2	120	85
VYC30W-Q48-T315	18 ~ 75	3.3 ±15	4 ±0.5	28.2	120	85
VYC30W-Q48-T512	18 ~ 75	5 ±12	3 ±0.625	30	120	86
VYC30W-Q48-T515	18 ~ 75	5 ±15	3 ±0.5	30	120	86

Notes: 1. Ripple and noise are measured at 20 MHz BW

Please read our datasheet & drawing disclaimer here.

Downloaded from Arrow.com.

PART NUMBER KEY

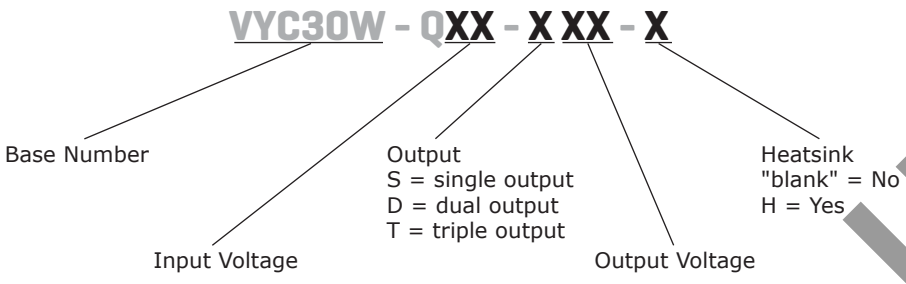

INPUT

parameter	conditions/description		min	typ	max	units
operating input voltage			9 18	24 48	36 75	Vdc Vdc
start-up time				10		ms
under voltage lockout		power up 24 V input power up 48 V input power down 24 V input power down 48 V input			9.0 17.8	Vdc Vdc Vdc Vdc
			8.0 16.0			
Remote on/off[1]		module off module on (or open circuit)	0 3.5		1.2 12	Vdc Vdc
filter	PI type					

Notes: 1. The on/off pin voltage is referenced to GND

OUTPUT

parameter	conditions/description	min	typ	max	units
line regulation	single and dual output models, measured from low line to high line at full load		±0.2	±0.5	%
	triple output models (main output), measured from low line to high line at full load			±1	%
	triple output models (auxiliary outputs), measured from low line to high line at full load			±5	%
load regulation	single and dual output models, measured from 10% to full load at nominal input		±0.5	±1	%
	triple output models (main output), measured 10% to full load at nominal input			±2	%
	triple output models (auxiliary outputs), measured 10% to full load at nominal input			±5	%
voltage accuracy	single and dual output models, refer to recommended circuit		±1	±3	%
	triple output models (main output), refer to recommended circuit		±2		%
	triple output models (auxiliary outputs), refer to recommended circuit		±5		%
transient recovery time	25% ~ 50% ~ 25% step load charge		300	500	µs
transient peak deviation	25% rated load change		300		µs
cross regulation	dual output models, main output 50% load, supplemental output from 10~100% load triple output models, main output and one auxiliary output 50% load, another auxiliary output from 10~100% load			±5	%
adjustability			±10%		Vdc
switching frequency	100% load, input voltage range		400		kHz
temperature coefficient			±0.02		%/°C

DISCONTINUED

Downloaded from Arrow.com.

PROTECTIONS

parameter	conditions/description		min	typ	max	units
short circuit protection	hiccups, automatic recovery					
over current protection	input voltage range			130		%
over voltage protection	single and dual output models (main)	5 V		6.1		Vdc
		12 V		15		Vdc
		15 V		18		Vdc
	triple output models (main)	3.3 V		3.9		Vdc
		5 V		6.2		Vdc

SAFETY AND COMPLIANCE

parameter	conditions/description	min	typ	max	units
isolation voltage	tested for 1 minute at 1 mA max.	1,500			Vdc
isolation resistance	at 500 Vdc	1,000			MΩ
isolation capacitance	100 kHz / 0.1 V		2,000		pF
RoHS compliant	yes				
MTBF	M1L-HDBK-217F	1,000,000			hours

ENVIRONMENTAL

parameter	conditions/description	min	typ	max	units
case operating temperature		-40		85	°C
maximum case temperature	during operation			105	°C
storage temperature		-40		125	°C
storage humidity	non-condensing	5		95	%

DERATING CURVES

output power vs. ambient temperature

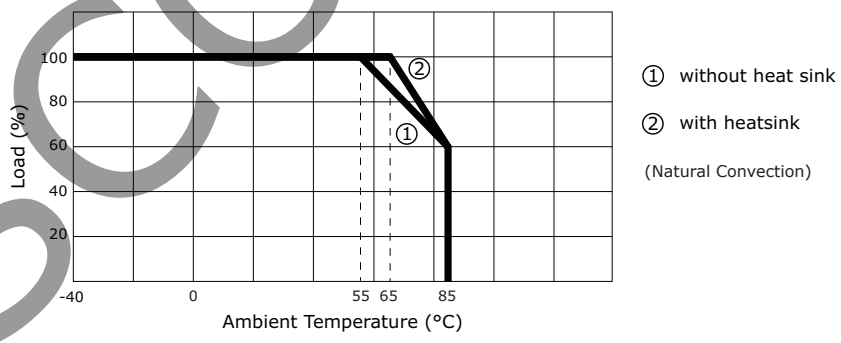

MECHANICAL

parameter	conditions/description	min	typ	max	units
dimensions	2.0 x 1.6 x 0.44 inch (50.8 x 40.6 x 11.2mm)				
case material	nickel-coated copper (six-sided)				
weight			50		g
	with heat sink		70		g

DISCONTINUED

Downloaded from Arrow.com.

MECHANICAL DRAWING

unit: mm [inch]
General tolerances: ±0.25mm [±0.010 inch]
Pin section tolerances: ±0.10mm [±0.004 inch]

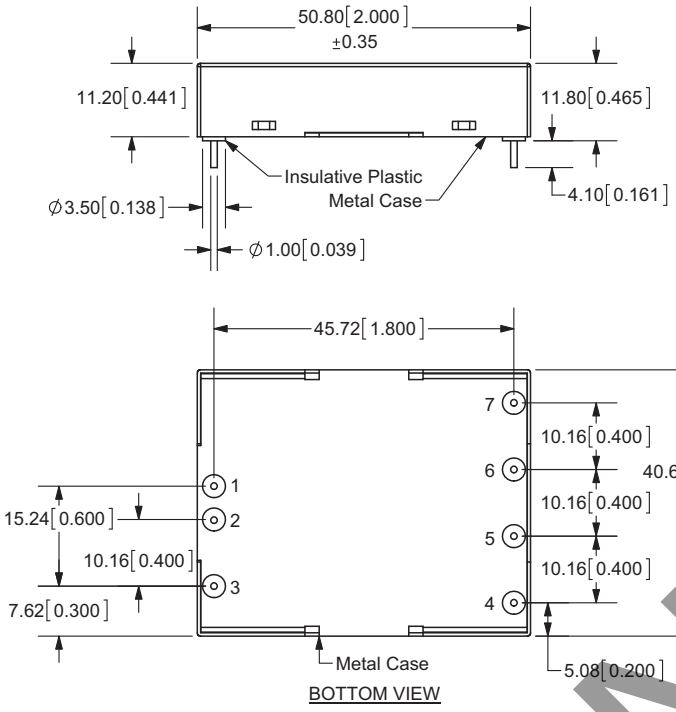

RECOMMENDED FOOTPRINT (TOP VIEW)

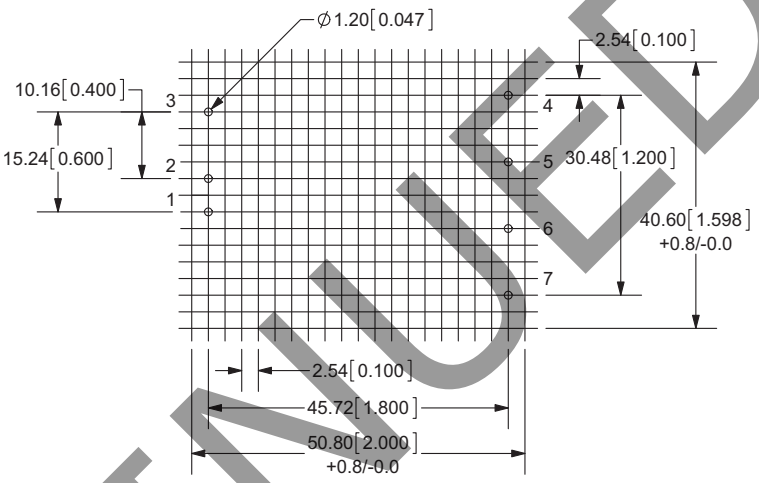

PIN CONNECTIONS			
Pin	Single	Dual	Triple
1	Vin	Vin	Vin
2	GND	GND	GND
3	On/Off	On/Off	On/Off
4	Trim	Trim	-Vo2
5	0V	-Vo	0V
6	+Vo	0V	+Vo1
7	No Pin	+Vo	+Vo2

unit: mm [inch]
tolerance: ±0.5mm [±0.020 inch]

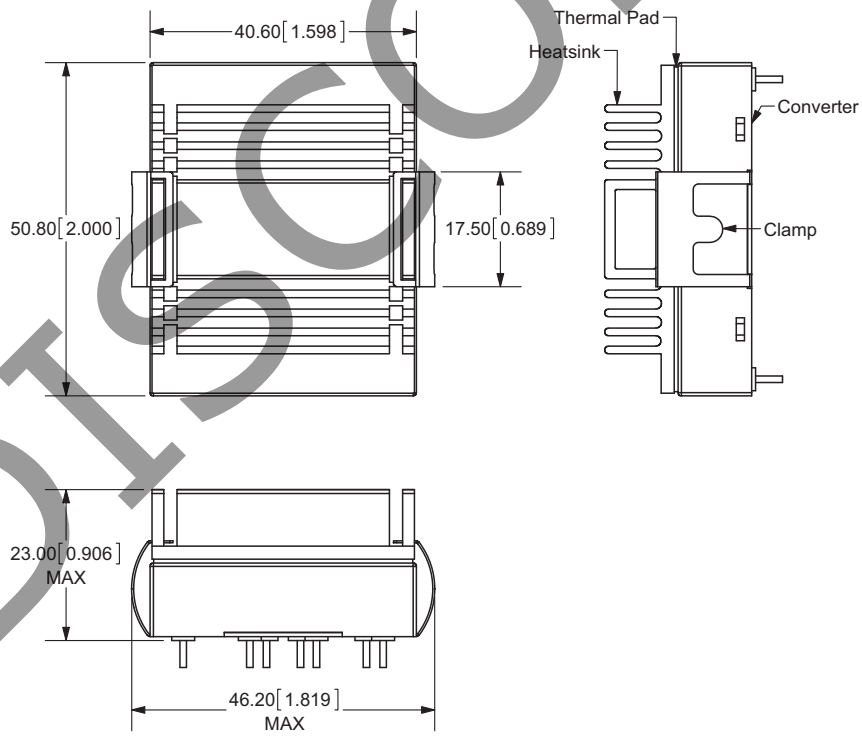

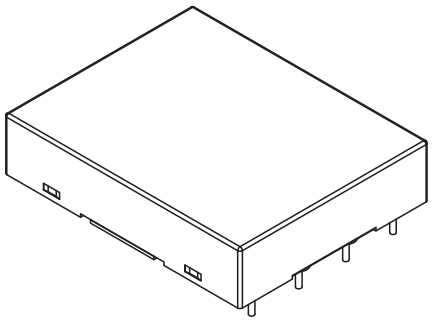

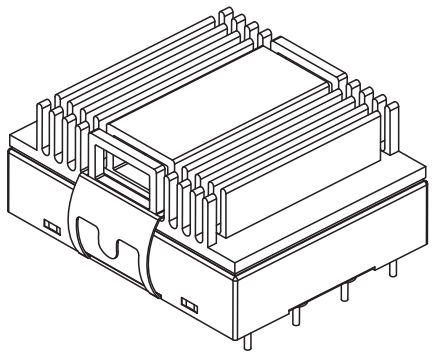

DISCONTINUED

Downloaded from Arrow.com.

APPLICATION NOTES

1. EMI & EMS recommended external circuit

	Single output, 18 ~ 75 Vin	Single output, 9 ~ 36 Vin	Dual output, 18 ~ 75 Vin	Dual output, 9 ~ 36 Vin	Triple output, 18 ~ 75 Vin	Triple output, 9 ~ 36 Vin
TVS	SMCJ90A,1500W(Bringtking)	SMCJ48A,1500W(Bringtking)	SMCJ90A,1500W(Bringtking)	SMCJ48A,1500W(Bringtking)	SMCJ48A,1500W(Bringtking)	SMCJ48A,1500W(Bringtking)
LCM	232uH(0.1V 100KHz) 15T core: N5 T12*6*4 (Acme)	232uH(0.1V 100KHz) 15T core: N5 T12*6*4 (Acme)	232uH(0.1V 100KHz) 15T core: N5 T12*6*4 (Acme)	232uH(0.1V 100KHz) 15T core: N5 T12*6*4 (Acme)	232uH(0.1V 100KHz) 15T core: N5 T12*6*4 (Acme)	232uH(0.1V 100KHz) 15T core: N5 T12*6*4 (Acme)
C0	680μF/1,000V (CapXon)	1,000μF/50V(CapXon)	680μF/100V (CapXon)	1000μF/50V(CapXon)	680μF/50V(CapXon)	1,000μF/100V (CapXon)
C1	105K/100V 1210(TDK)	105K/100V 1210(TDK)	105K/100V 1210(TDK)	105K/100V 1210(TDK)	105K/100V 1210(TDK)	105K/100V 1210(TDK)
C2	225K/100V 1210(TDK)	225K/100V 1210(TDK)	225K/100V 1210(TDK)	225K/100V 1210(TDK)	225K/100V 1210(TDK)	225K/100V 1210(TDK)
C3	No component	No component	102K/2,000V 1206 (TDK)	102K/2,000V 1200 (TDK)	No component	No component
C4	No component	No component	102K/2,000V 1206 (TDK)	102K/2,000V 1206 (TDK)	102K/2,000V 1206 (TDK)	102K/2,000V 1206 (TDK)

Figure 1 (Single output)

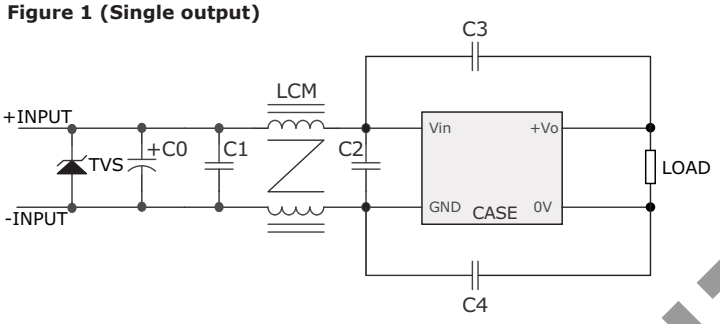

Figure 2 (Dual output)

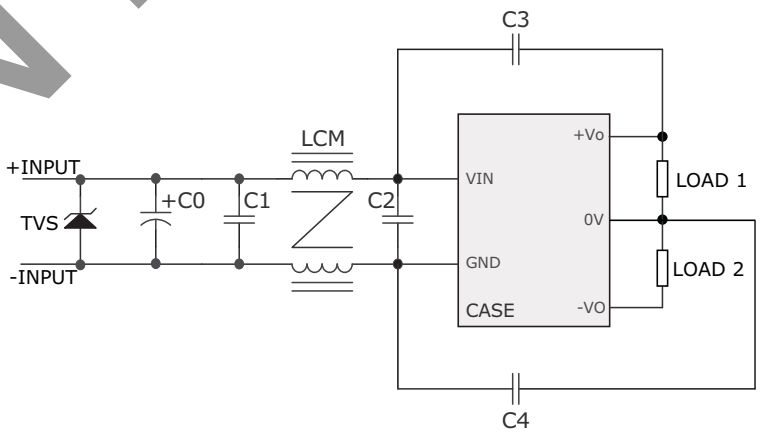

Figure 3 (Triple output)

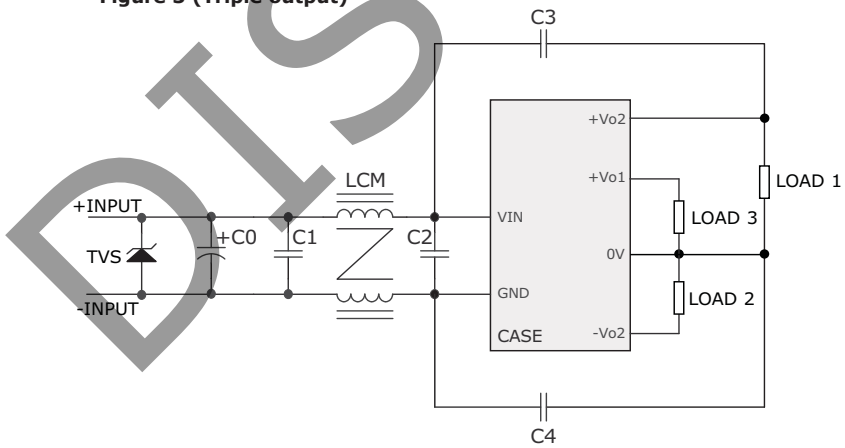

DISCONTINUED

Downloaded from Arrow.com.

REVISION HISTORY

rev.	description	date
1.0	initial release	08/23/2011
1.01	updated spec	10/07/2011
1.02	added two dual 5 V models	11/15/2011
1.03	V-Infinity branding removed	09/06/2012

The revision history provided is for informational purposes only and is believed to be accurate.

DISCONTINUED

CUI INC®

Headquarters
20050 SW 112th Ave.
Tualatin, OR 97062
800.275.4899

Fax 503.612.2383
cui.com
techsupport@cui.com

CUI offers a two (2) year limited warranty. Complete warranty information is listed on our website.

CUI reserves the right to make changes to the product at any time without notice. Information provided by CUI is believed to be accurate and reliable. However, no responsibility is assumed by CUI for its use, nor for any infringements of patents or other rights of third parties which may result from its use.

CUI products are not authorized or warranted for use as critical components in equipment that requires an extremely high level of reliability. A critical component is any component of a life support device or system whose failure to perform can be reasonably expected to cause the failure of the life support device or system, or to affect its safety or effectiveness.

Downloaded from Arrow.com.