DATE	DESCRIPTION	REV.
10.08.13	CHANGE AS PER ECN 13–091	A
1.04.17	CHANGE AS PER ECN17–005 B1 WAS 2.822 [71.64]	B
1.18.19	ECN 19–005, BASE WAS NYLON 46	C
11.16.20	ECN21–002,BASE MAT'L WAS BLACK	D

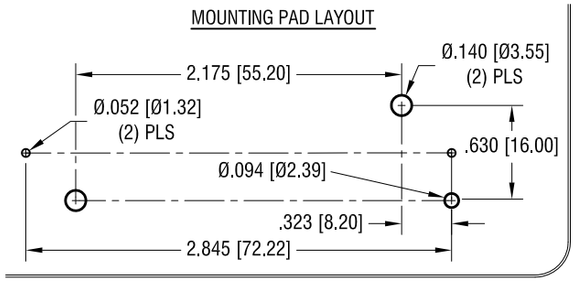

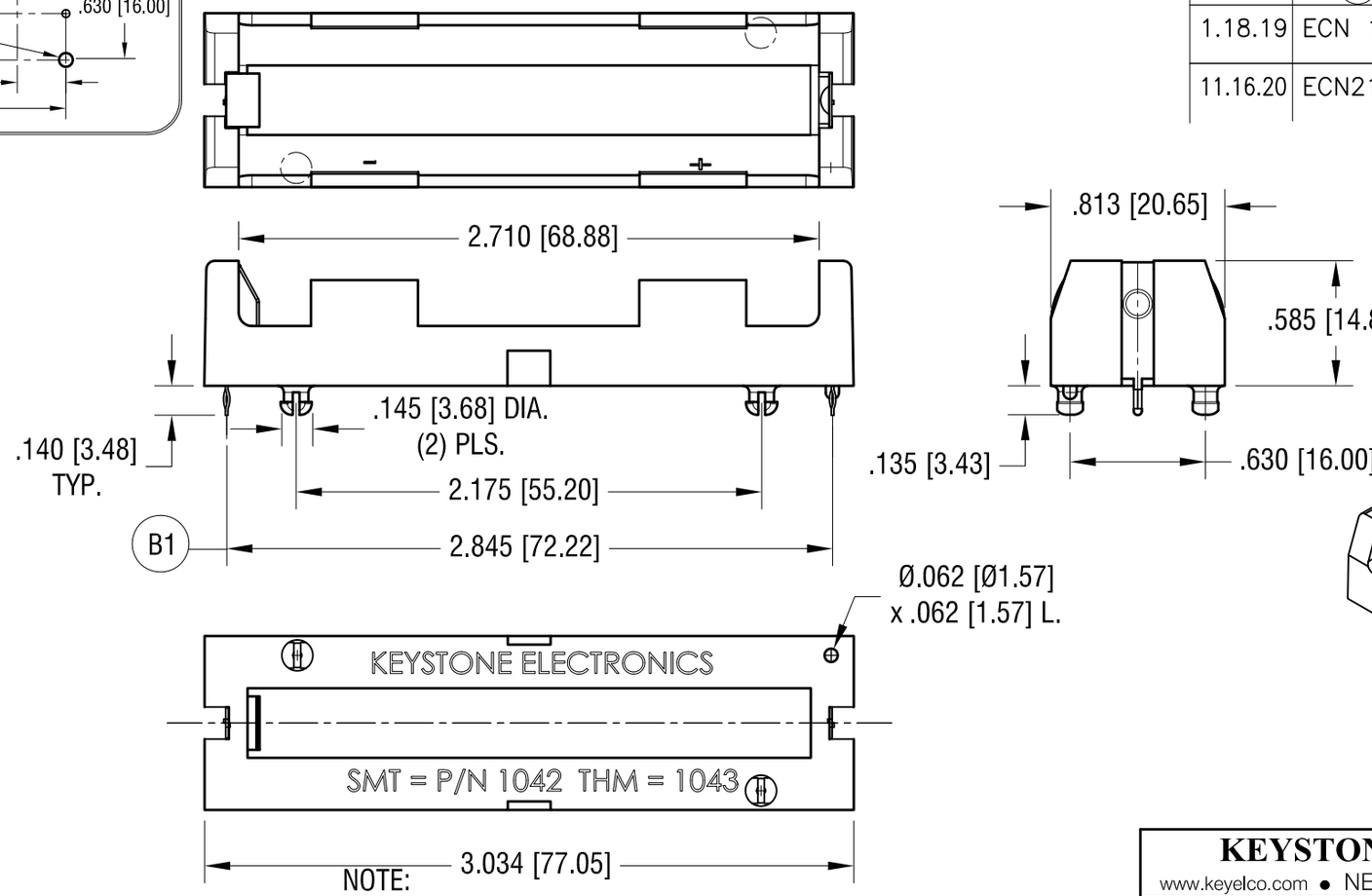

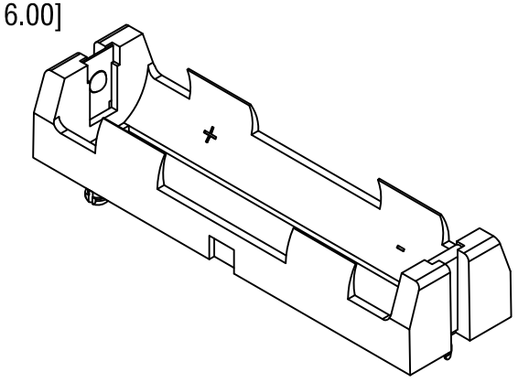

NOTE:

1. BASE:
   MAT'L: PBT, UL 94V-0 (GRAY COLOR)
2. CONTACT:
   MAT'L: .012 [0.30] THK STAINLESS STEEL
   FINISH: TIN NICKEL PLATE
3. HOLDER DESIGNED FOR LONGER BATTERIES
   WITH BUILD IN CIRCUIT PROTECTION

NOTE:

THIS DOCUMENT IS THE PROPERTY OF KEYSTONE ELECTRONICS CORP. AND SHALL NOT BE REPRODUCED, DISTRIBUTED OR USED AS A BASIS FOR MANUFACTURE WITHOUT PRIOR WRITTEN PERMISSION FROM KEYSTONE ELECTRONICS CORP.

KEYSTONE ELECTRONICS CORP.

www.keyelco.com • NEW HYDE PARK, NY 11040 • Tel (516) 328-7500

PART NAME	THM POLARIZED HOLDER, 18650		
MATERIAL	AS NOTED		
FINISH	AS NOTED	DRN BY NT	DATE 7.12.13
		APP'D RH	SCALE 1.25X
TOLERANCES INCH [MM] DECIMAL ± .010 [± 0.25] ANGULAR ± 1° UNLESS OTHERWISE SPECIFIED	CODE C	DWG NO. 1043P	

Downloaded from Arrow.com.