Dual 2-Input NAND Gate

NL27WZ00

The NL27WZ00 is a high performance dual 2-input NAND Gate operating from a 1.65 V to 5.5 V supply.

Features

- Designed for 1.65 V to 5.5 V V_{CC} Operation
- 2.4 ns t_{PD} at V_{CC} = 5 V (typ)
- Inputs/Outputs Overvoltage Tolerant up to 5.5 V
- I_{OFF} Supports Partial Power Down Protection
- Source/Sink 24 mA at 3.0 V
- Available in US8 Package
- Chip Complexity < 100 FETs
- -Q Suffix for Automotive and Other Applications Requiring Unique Site and Control Change Requirements; AEC-Q100 Qualified and PPAP Capable
- These Devices are Pb-Free, Halogen Free/BFR Free and are RoHS Compliant

Figure 1. Logic Symbol

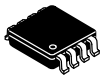

US8
US SUFFIX
CASE 493

MARKING DIAGRAMS

Commercial

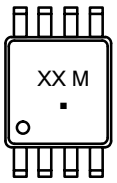

Automotive

X, XX, XXXX	= Specific Device Code
A	= Assembly Location
L	= Lot Code
Y	= Year Code
W	= Week Code
M	= Date Code
▪	= Pb-Free Package

ORDERING INFORMATION

See detailed ordering, marking and shipping information on page 6 of this data sheet.

© Semiconductor Components Industries, LLC, 2011

Downloaded from Arrow.com.

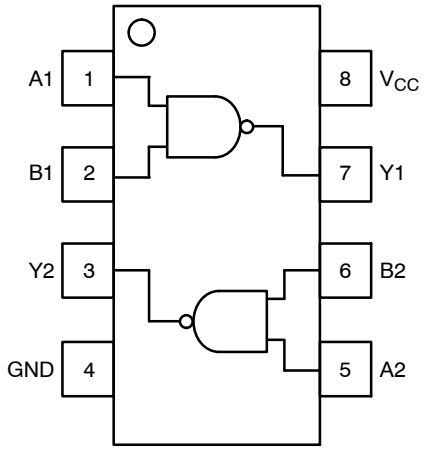

US8

Figure 2. Pinout

PIN ASSIGNMENT (US8)

Pin	Function
1	A1
2	B1
3	Y2
4	GND
5	A2
6	B2
7	Y1
8	V_{CC}

FUNCTION TABLE ($Y = \overline{AB}$)

Inputs		Output
A	**B**	**Y**
L	L	H
L	H	H
H	L	H
H	H	L

H = HIGH Logic Level
L = LOW Logic Level

Share Feedback
Your Opinion Matters

Downloaded from Arrow.com.

MAXIMUM RATINGS

Symbol	Characteristics		Value	Unit
V_{CC}	DC Supply Voltage		−0.5 to +6.5	V
V_{IN}	DC Input Voltage		−0.5 to +6.5	V
V_{OUT}	DC Output Voltage	Active-Mode (High or Low State) Tri-State Mode (Note 1) Power-Down Mode (V_{CC} = 0 V)	−0.5 to V_{CC} + 0.5 −0.5 to +6.5 −0.5 to +6.5	V
I_{IK}	DC Input Diode Current	V_{IN} < GND	−50	mA
I_{OK}	DC Output Diode Current	V_{OUT} < GND	−50	mA
I_{OUT}	DC Output Source/Sink Current		±50	mA
I_{CC} or I_{GND}	DC Supply Current per Supply Pin or Ground Pin		±100	mA
T_{STG}	Storage Temperature Range		−65 to +150	°C
T_L	Lead Temperature, 1 mm from Case for 10 secs		260	°C
T_J	Junction Temperature Under Bias		+150	°C
θ_{JA}	Thermal Resistance (Note 2)	US8	250	°C/W
P_D	Power Dissipation in Still Air	US8	500	mW
MSL	Moisture Sensitivity		Level 1	–
F_R	Flammability Rating	Oxygen Index: 28 to 34	UL 94 V-0 @ 0.125 in	–
V_{ESD}	ESD Withstand Voltage (Note 3)	Human Body Model Charged Device Model	2000 1000	V
$I_{Latchup}$	Latchup Performance (Note 4)		±100	mA

Stresses exceeding those listed in the Maximum Ratings table may damage the device. If any of these limits are exceeded, device functionality should not be assumed, damage may occur and reliability may be affected.

1. Applicable to devices with outputs that may be tri-stated.
2. Measured with minimum pad spacing on an FR4 board, using 10 mm-by-1 inch, 2 ounce copper trace no air flow per JESD51-7.
3. HBM tested to ANSI/ESDA/JEDEC JS-001-2017. CDM tested to EIA/JESD22-C101-F. JEDEC recommends that ESD qualification to EIA/JESD22-A115-A (Machine Model) be discontinued per JEDEC/JEP172A.
4. Tested to EIA/JESD78 Class II.

RECOMMENDED OPERATING CONDITIONS

Symbol	Characteristics		Min	Max	Unit
V_{CC}	Positive DC Supply Voltage		1.65	5.5	V
V_{IN}	DC Input Voltage		0	5.5	V
V_{OUT}	DC Output Voltage	Active-Mode (High or Low State) Tri-State Mode (Note 1) Power-Down Mode (V_{CC} = 0 V)	0 0 0	V_{CC} 5.5 5.5	
T_A	Operating Temperature Range		−55	+125	°C
t_r , t_f	Input Rise and Fall Time	V_{CC} = 1.65 V to 1.95 V V_{CC} = 2.3 V to 2.7 V V_{CC} = 3.0 V to 3.6 V V_{CC} = 4.5 V to 5.5 V	0 0 0 0	20 20 10 5	ns/V

Functional operation above the stresses listed in the Recommended Operating Ranges is not implied. Extended exposure to stresses beyond the Recommended Operating Ranges limits may affect device reliability.

Share Feedback
Your Opinion Matters

Downloaded from Arrow.com.

DC ELECTRICAL CHARACTERISTICS

Symbol	Parameter	Condition	V_{CC} (V)	T_A = 25 °C			−55 °C ≤ T_A ≤ 125 °C		Unit
				Min	Typ	Max	Min	Max	
V_{IH}	High-Level Input Voltage		1.65 to 1.95	0.65 x V_{CC}			0.65 x V_{CC}		V
			2.3 to 5.5	0.70 x V_{CC}			0.70 x V_{CC}		
V_{IL}	Low-Level Input Voltage		1.65 to 1.95			0.35 x V_{CC}		0.35 x V_{CC}	V
			2.3 to 5.5			0.30 x V_{CC}		0.30 x V_{CC}	
V_{OH}	High-Level Output Voltage	V_{IN} = V_{IH} or V_{IL} I_{OH} = −100 μA I_{OH} = −4 mA I_{OH} = −8 mA I_{OH} = −12 mA I_{OH} = −16 mA I_{OH} = −24 mA I_{OH} = −32 mA	1.65 to 5.5 1.65 2.3 2.7 3.0 3.0 4.5	V_{CC} − 0.1 1.29 1.9 2.2 2.4 2.3 3.8	V_{CC} 1.4 2.1 2.4 2.7 2.5 4.0	– – – – – – –	V_{CC} − 0.1 1.29 1.9 2.2 2.4 2.3 3.8	– – – – – – –	V
V_{OL}	Low-Level Output Voltage	V_{IN} = V_{IH} or V_{IL} I_{OL} = 100 μA I_{OL} = 4 mA I_{OL} = 8 mA I_{OL} = 12 mA I_{OL} = 16 mA I_{OL} = 24 mA I_{OL} = 32 mA	1.65 to 5.5 1.65 2.3 2.7 3.0 3.0 4.5	– – – – – – –	– 0.08 0.2 0.22 0.28 0.38 0.42	0.1 0.24 0.3 0.4 0.4 0.55 0.55	– – – – – – –	0.1 0.24 0.3 0.4 0.4 0.55 0.55	V
I_{IN}	Input Leakage Current	V_{IN} = 5.5 V or GND	1.65 to 5.5	–	–	±0.1	–	±1.0	μA
I_{OFF}	Power Off Leakage Current	V_{IN} = 5.5 V or V_{OUT} = 5.5 V	0	–	–	1.0	–	10	μA
I_{CC}	Quiescent Supply Current	V_{IN} = V_{CC} or GND	5.5	–	–	1.0	–	10	μA

Product parametric performance is indicated in the Electrical Characteristics for the listed test conditions, unless otherwise noted. Product performance may not be indicated by the Electrical Characteristics if operated under different conditions.

AC ELECTRICAL CHARACTERISTICS

Symbol	Parameter	V_{CC} (V)	Test Conditions	T_A = 25 °C			T_A = −55 °C to 125 °C		Unit
				Min	Typ	Max	Min	Max	
t_{PLH}, t_{PHL}	Propagation Delay, (A or B) to Y	1.65 to 1.95	C_L = 15 pF R_L = 1 MΩ R_1 = Open	–	5.7	10.5	–	11	ns
		2.3 to 2.7		–	3.2	5.3	–	5.7	
		3.0 to 3.6		–	2.4	3.7	–	4.0	
		4.5 to 5.5		–	1.9	2.9	–	3.2	
		3.0 to 3.6	C_L = 50 pF, R_L = 500 Ω, R_1 = Open	–	3.0	4.6	–	4.9	
		4.5 to 5.5		–	2.4	3.6	–	3.9	

CAPACITIVE CHARACTERISTICS

Symbol	Parameter	Condition	Typ	Unit
C_{IN}	Input Capacitance	V_{CC} = 5.5 V, V_{IN} = 0 V or V_{CC}	2.5	pF
C_{OUT}	Output Capacitance	V_{CC} = 5.5 V, V_{IN} = 0 V or V_{CC}	2.5	pF
C_{PD}	Power Dissipation Capacitance (Note 5)	10 MHz, V_{CC} = 3.3 V, V_{IN} = 0 V or V_{CC} 10 MHz, V_{CC} = 5.5 V, V_{IN} = 0 V or V_{CC}	9 11	pF

5. C_{PD} is defined as the value of the internal equivalent capacitance which is calculated from the operating current consumption without load. Average operating current can be obtained by the equation: $I_{CC(OPR)} = C_{PD} \bullet V_{CC} \bullet f_{in} + I_{CC}$. C_{PD} is used to determine the no-load dynamic power consumption; $P_D = C_{PD} \bullet V_{CC}^2 \bullet f_{in} + I_{CC} \bullet V_{CC}$.

Share Feedback
Your Opinion Matters

Downloaded from Arrow.com.

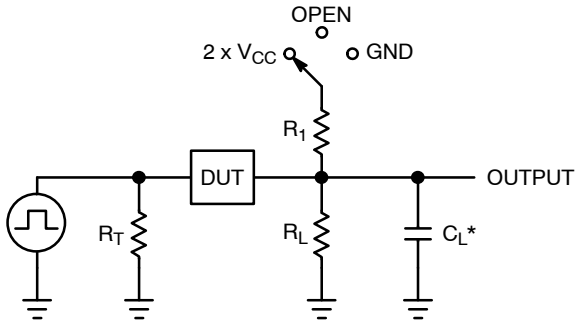

C_L includes probe and jig capacitance
R_T is Z_{OUT} of pulse generator (typically 50 Ω)
f = 1 MHz

Figure 3. Test Circuit

Test	Switch Position	C_L, pF	R_L, Ω	R_1, Ω
t_{PLH} / t_{PHL}	Open	See AC Characteristics Table		
t_{PLZ} / t_{PZL}	2 x V_{CC}	50	500	500
t_{PHZ} / t_{PZH}	GND	50	500	500

X = Don't Care

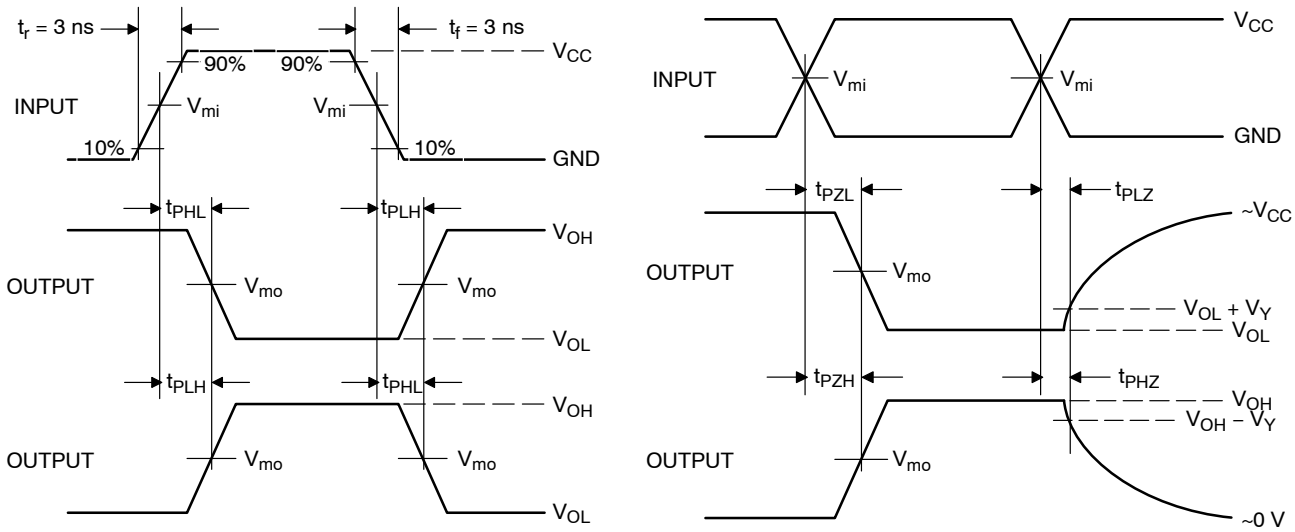

Figure 4. Switching Waveforms

V_{CC}, V	V_{mi}, V	V_{mo}, V		V_Y, V
		t_{PLH}, t_{PHL}	t_{PZL}, t_{PLZ}, t_{PZH}, t_{PHZ}	
1.65 to 1.95	$V_{CC}/2$	$V_{CC}/2$	$V_{CC}/2$	0.15
2.3 to 2.7	$V_{CC}/2$	$V_{CC}/2$	$V_{CC}/2$	0.15
3.0 to 3.6	$V_{CC}/2$	$V_{CC}/2$	$V_{CC}/2$	0.3
4.5 to 5.5	$V_{CC}/2$	$V_{CC}/2$	$V_{CC}/2$	0.3

Share Feedback
Your Opinion Matters

Downloaded from Arrow.com.

DEVICE ORDERING INFORMATION

Device	Packages	Specific Device Code	Pin 1 Orientation (See below)	Shipping†
NL27WZ00USG	US8	L1	Q4	3000 / Tape & Reel
NL27WZ00USG-Q*	US8	L1	Q4	3000 / Tape & Reel

† For information on tape and reel specifications, including part orientation and tape sizes, please refer to our Tape and Reel Packaging Specifications Brochure, BRD8011/D.

* -Q Suffix for Automotive and Other Applications Requiring Unique Site and Control Change Requirements; AEC-Q100 Qualified and PPAP Capable.

PIN 1 ORIENTATION IN TAPE AND REEL

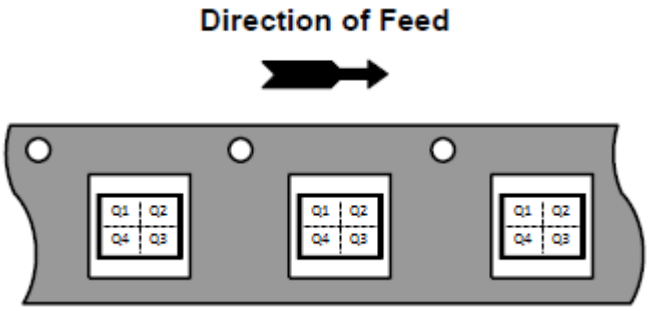

Share Feedback
Your Opinion Matters

Downloaded from Arrow.com.

REVISION HISTORY

Revision	Description of Changes	Date
17	Removed unreleased orderable part numbers and their associated information.	2/2/2026

This document has undergone updates prior to the inclusion of this revision history table. The changes tracked here only reflect updates made on the noted approval dates.

Share Feedback
Your Opinion Matters

Downloaded from Arrow.com.

SCALE 4 :1

US8
CASE 493
ISSUE F

DATE 01 SEP 2021

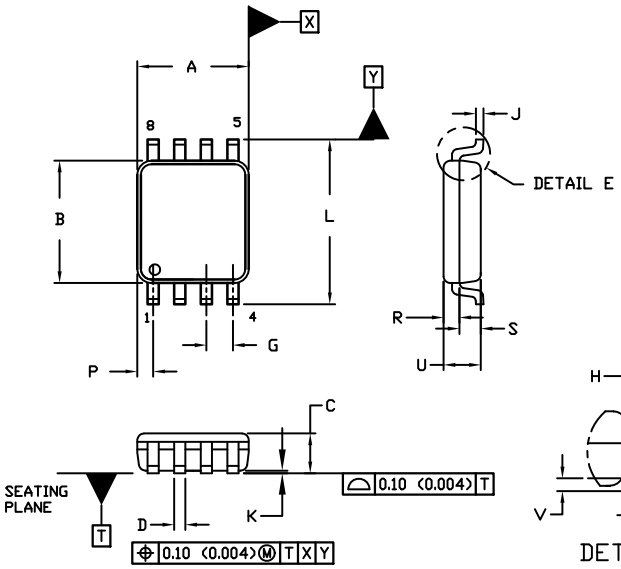

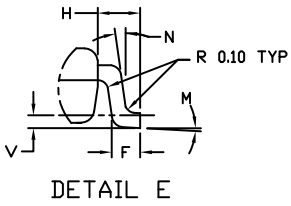

NOTES:

1. DIMENSIONING AND TOLERANCING PER ANSI Y14.5M, 1982.
2. CONTROLLING DIMENSION: MILLIMETERS
3. DIMENSION A DOES NOT INCLUDE MOLD FLASH, PROTRUSION, OR GATE BURR. MOLD FLASH, PROTRUSION, OR GATE BURR SHALL NOT EXCEED 0.14 (0.0055") PER SIDE.
4. DIMENSION B DOES NOT INCLUDE INTERLEAD FLASH OR PROTRUSION. INTERLEAD FLASH AND PROTRUSION SHALL NOT EXCEED 0.14 (0.0055") PER SIDE.
5. LEAD FINISH IS SOLDER PLATING WITH THICKNESS OF 0.0076-0.0203 MM (0.003-0.008").
6. ALL TOLERANCE UNLESS OTHERWISE SPECIFIED ±0.0508 MM (0.002").

DIM	MILLIMETERS		INCHES	
	MIN.	MAX.	MIN.	MAX.
A	1.90	2.10	0.075	0.083
B	2.20	2.40	0.087	0.094
C	0.60	0.90	0.024	0.035
D	0.17	0.25	0.007	0.010
F	0.20	0.35	0.008	0.014
G	0.50 BSC		0.020 BSC	
H	0.40 REF		0.016 REF	
J	0.10	0.18	0.004	0.007
K	0.00	0.10	0.000	0.004
L	3.00	3.25	0.118	0.128
M	0°	6°	0°	6°
N	0°	10°	0°	10°
P	0.23	0.34	0.010	0.013
R	0.23	0.33	0.009	0.013
S	0.37	0.47	0.015	0.019
U	0.60	0.80	0.024	0.031
V	0.12 BSC		0.005 BSC	

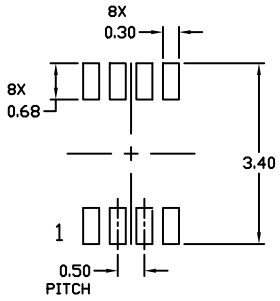

RECOMMENDED *
MOUNTING FOOTPRINT

* For additional information on our Pb-Free strategy and soldering details, please download the ON Semiconductor Soldering and Mounting Techniques Reference Manual, SOLDERRM/D.

GENERIC MARKING DIAGRAM*

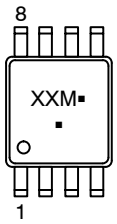

XX = Specific Device Code
M = Date Code
▪ = Pb−Free Package

(Note: Microdot may be in either location)

*This information is generic. Please refer to device data sheet for actual part marking. Pb−Free indicator, "G" or microdot "▪", may or may not be present. Some products may not follow the Generic Marking.

DOCUMENT NUMBER:	98AON04475D	Electronic versions are uncontrolled except when accessed directly from the Document Repository. Printed versions are uncontrolled except when stamped "CONTROLLED COPY" in red.
DESCRIPTION:	US8	PAGE 1 OF 1

onsemi and ONSEMI are trademarks of Semiconductor Components Industries, LLC dba **onsemi** or its subsidiaries in the United States and/or other countries. **onsemi** reserves the right to make changes without further notice to any products herein. **onsemi** makes no warranty, representation or guarantee regarding the suitability of its products for any particular purpose, nor does **onsemi** assume any liability arising out of the application or use of any product or circuit, and specifically disclaims any and all liability, including without limitation special, consequential or incidental damages. **onsemi** does not convey any license under its patent rights nor the rights of others.

Downloaded from Arrow.com.

onsemi, onsemi, and other names, marks, and brands are registered and/or common law trademarks of Semiconductor Components Industries, LLC dba "**onsemi**" or its affiliates and/or subsidiaries in the United States and/or other countries. **onsemi** owns the rights to a number of patents, trademarks, copyrights, trade secrets, and other intellectual property. A listing of **onsemi**'s product/patent coverage may be accessed at www.onsemi.com/site/pdf/Patent−Marking.pdf. **onsemi** reserves the right to make changes at any time to any products or information herein, without notice. The information herein is provided "as−is" and **onsemi** makes no warranty, representation or guarantee regarding the accuracy of the information, product features, availability, functionality, or suitability of its products for any particular purpose, nor does **onsemi** assume any liability arising out of the application or use of any product or circuit, and specifically disclaims any and all liability, including without limitation special, consequential or incidental damages. Buyer is responsible for its products and applications using **onsemi** products, including compliance with all laws, regulations and safety requirements or standards, regardless of any support or applications information provided by **onsemi**. "Typical" parameters which may be provided in **onsemi** data sheets and/or specifications can and do vary in different applications and actual performance may vary over time. All operating parameters, including "Typicals" must be validated for each customer application by customer's technical experts. **onsemi** does not convey any license under any of its intellectual property rights nor the rights of others. **onsemi** products are not designed, intended, or authorized for use as a critical component in life support systems or any FDA Class 3 medical devices or medical devices with a same or similar classification in a foreign jurisdiction or any devices intended for implantation in the human body. Should Buyer purchase or use **onsemi** products for any such unintended or unauthorized application, Buyer shall indemnify and hold **onsemi** and its officers, employees, subsidiaries, affiliates, and distributors harmless against all claims, costs, damages, and expenses, and reasonable attorney fees arising out of, directly or indirectly, any claim of personal injury or death associated with such unintended or unauthorized use, even if such claim alleges that **onsemi** was negligent regarding the design or manufacture of the part. **onsemi** is an Equal Opportunity/Affirmative Action Employer. This literature is subject to all applicable copyright laws and is not for resale in any manner.

ADDITIONAL INFORMATION

TECHNICAL PUBLICATIONS:
Technical Library: www.onsemi.com/design/resources/technical−documentation
onsemi Website: www.onsemi.com

ONLINE SUPPORT: www.onsemi.com/support
For additional information, please contact your local Sales Representative at www.onsemi.com/support/sales

Downloaded from Arrow.com.