Technical data // PT65 5 03 - -

PTR HARTMANN
A Phoenix Mecano Company

Rotary Code Switch

Through Hole Technology

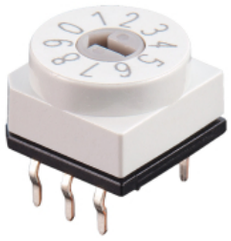

Highlights

- Solid PCB pins
- Contacts with abrasion resistant hard gold plating
- Extra sealed design
- Switches are solder and flux sealed and washable
- Excellent detent, once more improved
- 100 % electronic inspection and testing

Mechanical Data

Type	horizontal
Fixation mode	THT
Height	6.5 mm
Length	10.0 mm
Width	10.0 mm
Pin connection	3+3
Torque	(typically) 1.7 Ncm
Mechanical lifetime	30.000 steps
Positions per rotation	10 | 16 - more versions on request
Perm. ambient temperature	-40 °C ... +85 °C
Perm. storage temperature	-40 °C ... +85 °C
Degree of protection	comparable IP67
Sealing	O-Ring
Humidity	21 days at 40 °C, 93 %RH
Sinus-vibration testing	acc. IEC 68-2-6
Frequency range	10 Hz ... 500 Hz ... 10 Hz, sliding
Amplitude	6.0 mm
Acceleration	10.0 g
Shock testing	acc. IEC 68-2-27
Shock acceleration amplitude	50.0 g
Duration of nominal shock	11.0 ms
Directions	6 (±x, ±y, ±z) 3 times each
Wave soldering	Single Wave

Downloaded from Arrow.com.

PTR HARTMANN
A Phoenix Mecano Company

Mechanical Data	
Iron soldering	2 s / 340 °C
Electrical Data	
Operating voltage	<= 42.0 V
Standby current	<= 0.2 A
Contact load, dynamic	<= 0.15 A
Minimum load	1.0 µA 20.0 mVDC
Test voltage	250.0 V 50 Hz / 1.0 min
Contact resistance	< 80.0 mOhm
Insulation resistance	> 100.0 MOhm

Technical Drawing

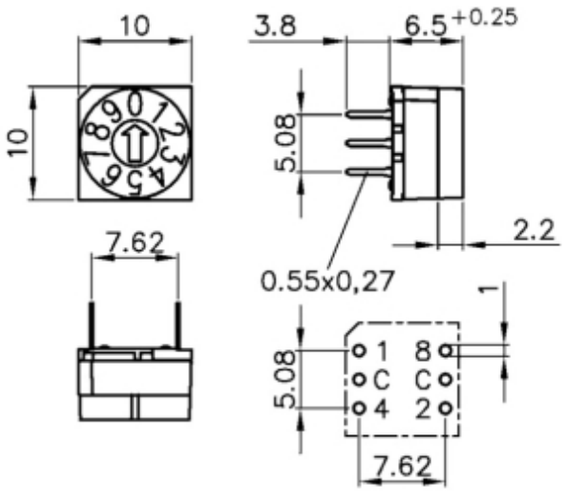

Configuration

Actuators

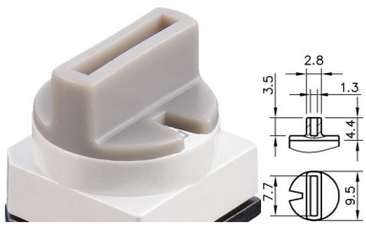

Segment wheel

Downloaded from Arrow.com.

PTR HARTMANN
A Phoenix Mecano Company

Codes

Hexadezimal
Typ 03

	C	1	2	4	8	
0	●					0
1	●	●				●
2	●		●			2
3	●	●	●			●
4	●			●		4
5	●	●		●		●
6	●		●	●		6
7	●	●	●	●		●
8	●				●	8
9	●	●			●	●
10	●		●		●	A
11	●	●	●		●	●
12	●			●	●	C
13	●	●		●	●	●
14	●		●	●	●	E
15	●	●	●	●	●	●

Hexadecimal, 16

Contact pins

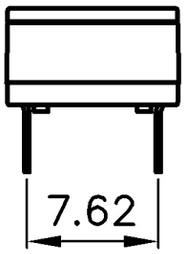

straight

Downloaded from Arrow.com.

Packing depending on acutator

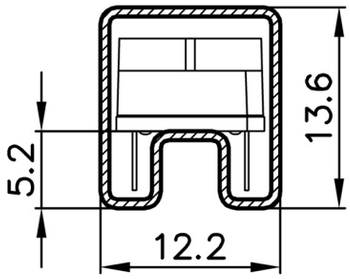

Tube for PT65 7...

Downloaded from Arrow.com.